WAYTON
ENERGY TECH CO., LTD

RELIABLE POWER
SMART SOLUTIONS
BRIGHTER TOMORROW

POWER TRANSFORMER

PRODUCT CATALOG



WAYTON
ENERGY TECH CO., LTD

Contents

01 

Single phase pole mounted transformer

06 
6kV,10kV,11kV,12kV Oil-immersed Distribution Transformer

08 
6kV,10kV,11kV,12kV High Overload Oil-immersed Distribution Transformer

10 
6kV,10kV,11kV,12kV Oil-immersed Amorphous Alloy Distribution Transformer

12 
6kV,10kV,11kV,12kV Oil-immersed Tridimensional Toroidal-core Transformer

14 
6kV,10kV,11kV,12kV Oil-immersed Tridimensional Toroidal-core Transformer

16 
13.8kV,15kV,20kV,22kV,24kV Oil-immersed Distribution Transformer

18 
30kV,33kV,34.5kV,35kV,38kV Oil-immersed Power Transformer

20 
220 (110) kV Railway Traction Transformer

21 
220kV, 110kV (66kV) Power Transformer

23 
10kV/6kV Dry-type Amorphous Alloy Distribution Transformer

25 
10kV/6kV Dry-type Distribution Transformer

29 
20kV Dry-type Distribution Transformer

32 
35kV Dry-type Power Transformer

34 
SJD-Dry or Oil-immersed Earthing transformer (Popular products)

36 
ZGS series Prefabricated Substation

37 
YB series Prefabricated Substation

38 
Prefabricated Containerized Intelligent Substation

39 
Energy Storage Step-up Substation integrated with Converter (Dry Type Transformer)

40 
Energy Storage step up substation integrated with Converter (Oil-immersed Type Transformer)

41 
KBSG2-T Mining Explosion-proof Transformer
KBSGZY2-T Mining Explosion-proof Mobile Substation

42 
KBZSGZY Mining Explosion-proof Converter Mobile Substation

43 
DFW-12/630 Touchable cable branch box (European style)

PRODUCT STANDARDS

Oil immersed transformer

P05

Dry type transformer

P22

Single phase pole mounted transformer



Product Introduction

Developed Western countries, Southeast Asia, and North and South America extensively use single-phase transformers as distribution transformers. In a decentralized power distribution network, single-phase transformers have significant advantages as distribution transformers. It can reduce the length of low-voltage distribution lines, reduce line losses, and improve power supply quality.The transformer adopts an efficient and energy-saving coil iron core structure design, adopts a column mounted suspension installation method, has a small volume, low infrastructure investment, reduces the low-voltage power supply radius, and can reduce low-voltage line loss by more than 60%. Suitable for rural power grids, remote mountainous areas, scattered villages,agricultural production, lighting and power consumption,and can also be used for energy-saving transformation of column mounted distribution lines in railways and urban power grids.



Product Standards :

1.IEEE Std C57.12.00TM-2000 standard -IEEE Standard for Standard General Requirements for Liquid-Immersed Distribution, Power,and Regulating Transformers
2. IEEE Std C57.12.20TM-2005 standard -IEEE Standard for Overhead-Type Distribution Transformers,500kVA and Smaller: High Voltage, 34500V and Below;Low-Voltage,7970/13800Y V and below
3. IEEE Std C57.12.31TM-2010 standard -IEEE Standard for Pole Mounted Equipment-Enclosure Integrity
4. IEEE Std C57.12.35TM-1996 standard -IEEE Standard for Bar Coding for Distribution Transformers
5. IEEE Std C57.12.90M-2006 standard -IEEE Standard Test Code for Liquid-Immersed Distribution,Power,and Regulating Transformers
6. IEEE Std C57.12.91TM-2001 standard -IEEE Guide for Loading Mineral-Oil-Immersed Transformers
7.NEMA TR1-1993 (R2000)Elevated Temperatures (ASTM)American Society for Testing Materials

Model

D □ □ M.R − □ / □

- Rated voltage(kV)
- Rated capacity(kVA)
- M Oil immersed,R Roll iron core
- Design number:9,11,15,16
- H Amorphous alloy iron core
- D Single phase

Technical data

1. Type:Conventional or CSP type
2. Suitable for both indoor or outdoor
3. Ambient temp:-25℃~+40℃
4. Winding temp rise:55 ℃ or 65 ℃
5. Core:CRGO or Amorphous Core
6. Efficiency standard:DOE 2016 or NEMA TP1
7. Winding material: CU or AL
8. Frequency:50HZ or 60HZ
9. Capacity: 5kVA to 333kVA

Technical Parameters

Type	Capacity(kVA)	Ratio (V)			Loss(W)		Dimensions (mm)				Weight(kg)	
		HV	tapping range	LV	No load loss	Load loss	A	B	C	D	Oil	Total weight
D11-3	3	33000 30000 17321 11547 13800 7967 7620 6350 or other	±2×2.5% or other	120 220 240 250 or other	9	45	800	400	500	300	10	70
D11-5	5				19	75	860	430	510	340	15	92
D11-10	10				36	120	910	470	550	380	22	150
D11-15	15				50	195	970	500	580	410	30	210
D11-25	25				80	290	1025	550	630	450	45	258
D11-37.5	37.5				105	360	1225	630	680	520	50	340
D11-50	50				135	500	1235	630	680	520	62	395
D11-75	75				190	650	1300	680	720	550	88	480
D11-100	100				210	850	1350	780	810	610	94	530
D11-167	167				350	1410	1460	830	890	660	138	680
D11-250	250				500	2000	1570	960	950	660	250	990
D11-333	333				650	2500	1660	960	960	660	300	1160

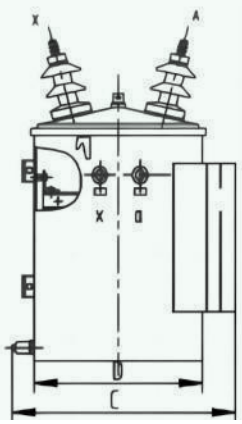

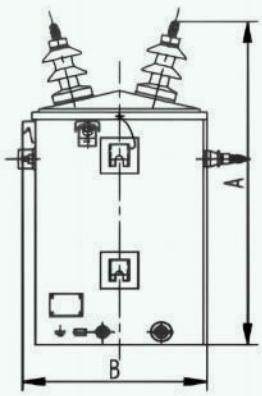

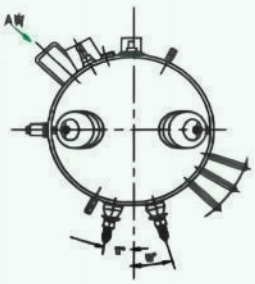

Product Structure

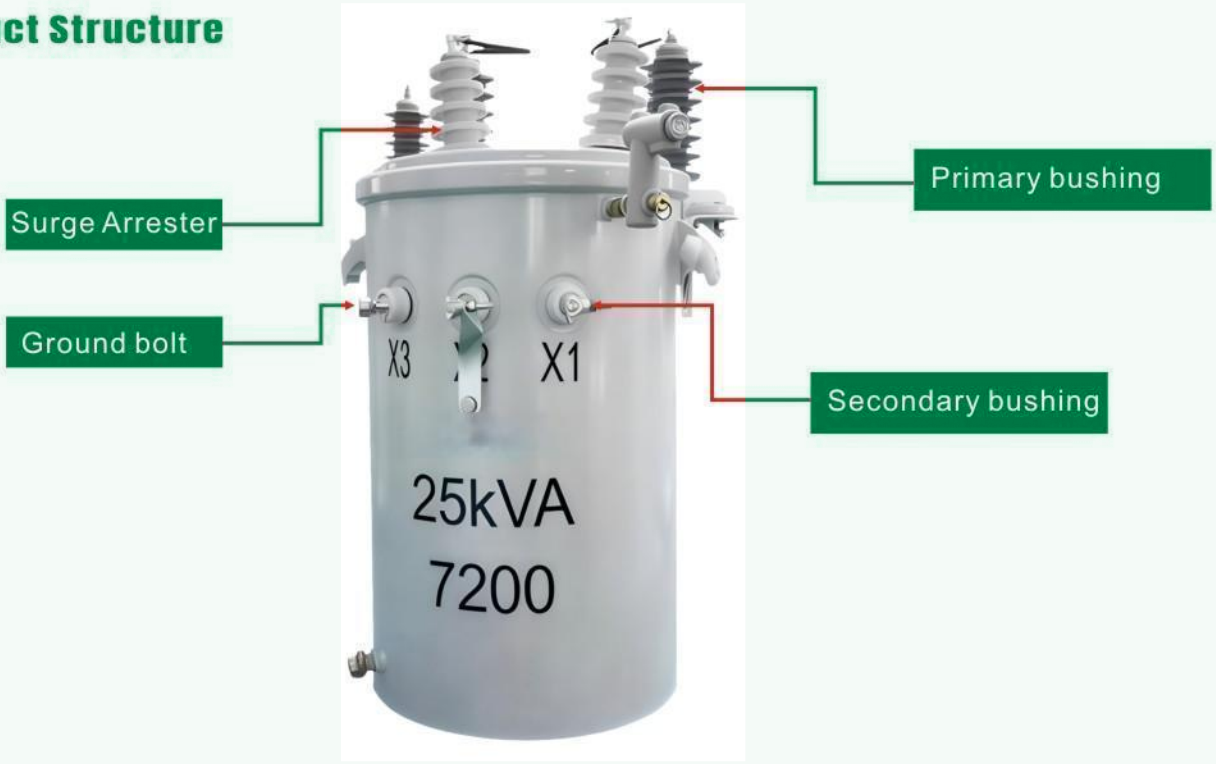

Technical Parameters

Table of Liquid Single phase pole mounted transformer (<150kV BIL)Temp rise 65℃								
Capacity kVA	Primary voltage	Secondary voltage	A mm	B mm	C mm	Weight (kg)	Efficiency % DOE2016	NEMA TP1
DS-10			530	600	1060	160	98.70%	98.40%
DS-15	4160V		530	600	1060	180	98.82%	98.60%
DS-25	7200V	120/240V	580	660	1080	230	98.95%	98.70%
DS-37.5	7620V	240/480V	610	690	1090	290	99.05%	98.80%
DS-50	12470V	277V	650	700	1100	340	99.11%	98.90%
DS-75	13200V	346V	680	750	1250	450	99.19%	99.00%
DS-100	13800V	600V	730	800	1250	500	99.25%	99.00%
DS-167	19920V		900	850	1300	780	99.33%	99.10%
DS-250			1200	900	1450	1100	99.39%	99.20%
DS-333			1350	1200	1500	1300	99.43%	99.20%

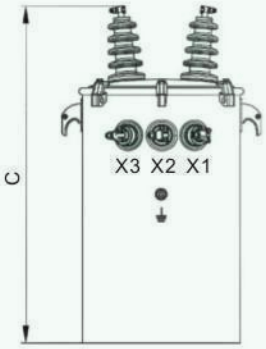

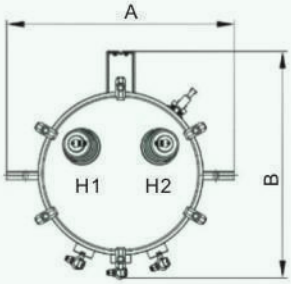



AEM Core

Amorphous

Conditions

1. Load type

The usage conditions of single-phase transformers need to be selected based on the type of load. Generally speaking, if the load is a constant resistance load such as a pure resistor, light bulb, electric heater, etc., a conventional transformer can be used; If the load is a non constant resistance load such as an electric motor, frequency converter, or inductive load, a dedicated transformer is required to meet the dynamic response and harmonic problems of the load.

2. Environmental temperature

The usage conditions of single-phase transformers also need to consider the ambient temperature. In high-temperature environments, the temperature rise of transformers can increase, which may lead to insulation material aging, short circuits, and other issues. Therefore, transformers that are suitable for the ambient temperature should be selected or heat dissipation measures should be taken, such as increasing the area of heat dissipation fins, installing fans, etc.

3. Altitude

The usage conditions of single-phase transformers also need to consider the altitude. The use of transformers in high altitude or high-altitude areas may result in a decrease in the output capacity of the transformer due to reasons such as reduced air pressure and thin air, and may even cause problems such as partial discharge and breakdown. Therefore, when using transformers in high-altitude areas, appropriate transformers should be selected or corresponding measures should be taken based on the altitude, such as increasing insulation distance, adjusting winding structure, etc.

In summary, the usage conditions of single-phase transformers need to consider factors such as load type, ambient temperature, altitude, etc. Choosing a suitable transformer and taking corresponding measures can ensure the normal operation of the transformer, extend its service life, and improve the reliability of the power system.

Production





Quality and After-sale service Assurance

FATO p r o d u c t s Quality assurance is an integral part of the process.All electrical testing is per IEEE standards..Quality of processed parts and sub-assemblies are the responsibility of the production personnel.Regular quality inspections and spot checking are conducted to make sure that good and consistent quality is achieved and maintained. We provide a 24-hour tec -hnical consultation service hotline and we have dedicated after-sales service outlets in South America and Africa.

Routine Tests

1.In-process Core Loss Test
2. Transformer Turns Ratio Test
3. Winding Resistance Test
4. Polarity and Phase Displacement Test
5. Insulation Power Factor Test
6. Liquid Insulation DBV Test
7. No Load Loss &Excitation Test
8. Impedance Voltage &Load Loss Test
9. Voltage Ratio Test
10. Applied Potential Test
11. Induced Potential Test

Type Tests

1. Temperature Rise test ,
2. Lightning impulse withstand voltage test,
3. Sound Level test

OIL IMMERSED TRANSFORMER

PRODUCTS STANDARDS

GB/T6451	Specification and technical requirements for oil-immersed power transformers
GB1094.1	Power transformers-Part1:General
IEC 60076-2	Power transformers-Part2:immersed transformers
GB1094.3	Power transformers-Part3:Insulation levels,dielectric tests and external clearances in ai
GB1094.5	Power transformers-Part5:Ability to withstand short circuit
IEC 60076-10	Power transformers-Part10:Determination of sound levels
GB/T25446	Specifcation and technical requirements for oil-immersed amorphous alloy core distribution transformers

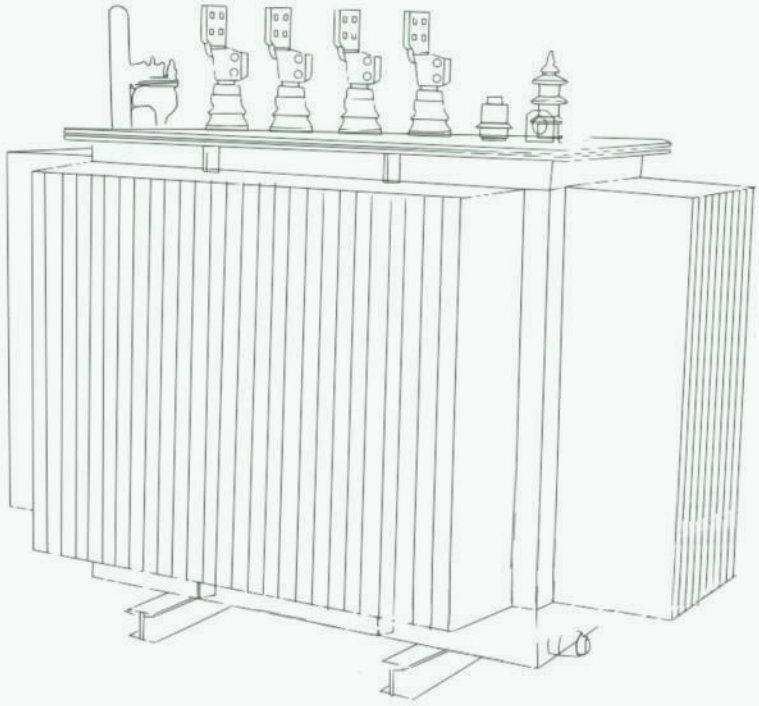

6kV,10kV,11kV,12kV Oil-immersed Distribution Transformer



Brief Introduction

As a fully sealed distribution transformer, it is applicable to 10kV/0.4kV, 50Hz distribution and transformation systems for wide application in various residential and commercial buildings, public facilities, industrial and mining enterprises, power generation enterprises and urban and rural power grids. It conforms to the requirements of GB1094 Power Transformers

Model

S □-M - □ / □

- Voltage class
- Rated capacity
- Fully sealed
- Code of loss level
- Three phases

Technical Specifications

1.Voltage class: 10kV, 6kV
2.Tapping range: ±2*2.5%, ±5%
3.Vector group: Yyn0, Dyn11
4.Capacitance range: for S11-M, 30~3150kVA; for S13-M, 30~3150kVA
5.Insulation level: 6kV LI60 AC25, 10kV LI75 AC35
6.Voltage regulating mode: no excitation voltage regulation

Characteristics

1.Core made of high quality silicon steel sheet, with 45° inclined multi-seam, high lamination coefficient, low no-load loss and low noise;
2.Fully sealed corrugated fuel tank that keeps the core parts from open air, thus ensuring zero maintenance and long service life;
3.Mistake-proofing scheme realizing stable product quality, strong overload capability and strong short-circuit tolerance;
4.Beautiful appearance and small space required.

Technical Parameters

S11-M

Rated capacity (kVA)	Voltage combination			Vector group	No-load loss (W)	Load loss (W) 75°C	No-load current (%)	Short circuit impedance (%)
	High voltage (kV)	High voltage tapping range (%)	Low voltage (kV)					
10	6 6.3 10 10.5	±2×2.5%	0.4	Dyn11 or Yyn0	50	350/320	2.3	4
20					70	500/460	2.2	
30					100	630/600	2.1	
50					130	910/870	2.0	
63					150	1090/1040	1.9	
80					180	1310/1250	1.8	
100					200	1580/1500	1.6	
125					240	1890/1800	1.5	
160					280	2310/2200	1.4	
200					340	2730/2600	1.3	
250					400	3200/3050	1.2	
315					480	3830/3650	1.0	
400					570	4520/4300	1.0	
500					680	5410/5150	0.9	
630					810	6200	0.8	4.5
800					980	7500	0.7	
1000					1150	10300	0.6	
1250					1360	12000	0.6	
1600					1640	14500	0.6	
2000					2060	1940/18500	0.5	

Note: 1. As for transformers with rated capacity of 500kVA and below, Dyn11 connection is applicable to the load losses above the slash in the cell, and Yyn0 connection applicable to those below the slash.
2. If required by users, a transformer with a low voltage of 0.69kV is available.

S13-M

Rated capacity (kVA)	Voltage combination			Vector group	No-load loss (W)	Load loss (W) 75°C	No-load current (%)	Short circuit impedance (%)
	High voltage (kV)	High voltage tapping range (%)	Low voltage (kV)					
20	6 6.3 10 10.5	±2×2.5%	0.4	Dyn11 or Yyn0	80	630/600	2.0	4
50					100	910/870	1.9	
63					110	1090/1040	1.8	
80					130	1310/1250	1.7	
100					150	1580/1500	1.5	
125					170	1890/1800	1.4	
160					200	2310/2200	1.3	
200					240	2730/2600	1.2	
250					290	3200/3050	1.1	
315					340	3830/3650	0.9	
400					410	4520/4300	0.9	
500					480	5410/5150	0.8	4.5
630					570	6200	0.7	
800					700	7500	0.6	
1000					830	10300	0.5	
1250					970	12000	0.5	
1600					1170	14500	0.5	

Note: 1. As for transformers with rated capacity of 500kVA and below, Dyn11 connection is applicable to the load losses above the slash in the cell, and Yyn0 connection applicable to those below the slash.
2. If required by users, a transformer with a low voltage of 0.69kV is available.

6kV,10kV,11kV,12kV High Overload Oil-immersed Distribution Transformer



Brief Introduction

This is a new type of transformer,which mainly satisfies the needs of short-time severe increase of electrical loads, so as to effectively cope with the rural demand for centralized electricity consumption at Spring Festivals and in summer.

Model

S13 (F)—M — □ / □ /10 GZ

- GZ — High overload capacity
- 10 — Voltage class 10kV
- □ — Rated capacity (kVA)
- □ — Insulation & heat resisting class
- M — Fully sealed
- (F) — Code of loss level
- S13 — Three phases

Characteristics

1. High overload running capacity; highly heat-resistant material used for the insulation of the windings and the hot spots of the body to avoid insulation aging and ensure safe overload operation;
2. Fully sealed corrugated fuel tank that keeps the core parts from open air, thus ensuring zero maintenance and long service life;
3. Core made of high quality silicon steel sheet, with 45° inclined multi-seam, high lamination coefficient, low no-load loss and low noise;
4. Mistake-proofing scheme realizing stable product quality, strong overload capability and strong short-circuit tolerance;
5. Beautiful appearance and small space required.

Technical Specifications

1.Voltage class: 10kV

2.Tapping range: ±2*2.5%, ±5%

3.Vector group: Yyn0, Dyn11

4.Capacitance range: for S11-M/S13-M, 50/100/200kVA

5.Insulation level: 10kV L175 AC35

6.Voltage regulating mode: no excitation voltage regulation

Technical Parameters

S11 (13) -M

Rated capacity (kVA)	Voltage combination			Vector group	Load loss (W) 120℃	S11		S13		Short circuit impedance (%)
	High voltage (kV)	High voltage tapping range (%)	Low voltage (kV)			No-load loss (W)	No-load current (%)	No-load loss (W)	No-load current (%)	
50	10	±5	0.4	Dyn11 or Yyn0	910/870	130	1.1	100	0.8	4
100	10.5	±2×2.5			1580/1500	200	1.0	150	0.7	
200					2730/2600	340	0.9	240	0.6	
Note: Dyn11 connection is applicable to the load losses above the slash in the cell, and Yyn0 connection applicable to those below the slash.										

With in the normal temperature rise range, it is capable of continuous phased operation under 1.5 times rated capacity for 6h (3h for load rise and fall phases), 1.75 times rated capacity for 3h (1.5h for load rise and fall phases), and 2.0 times rated capacity for 1h,without affecting the normal service life of the transformer; the temperature rise under high overload distribution and transformation shall meet the F-class insulation limits. The current application curve in the temperature rise test is as follows:

High overload curve diagram

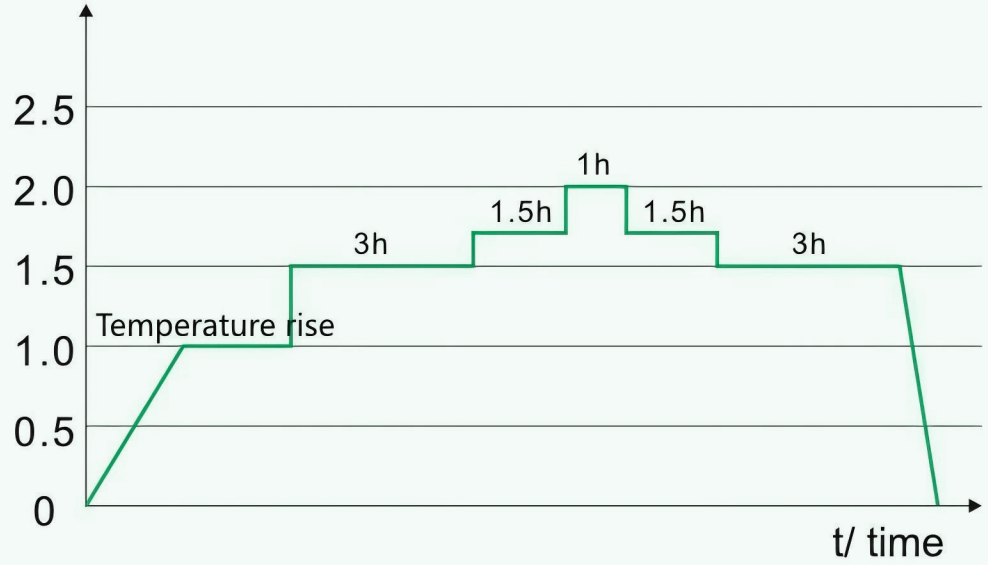

6kV,10kV,11kV,12kV Oil-immersed Amorphous Alloy Distribution Transformer



Brief Introduction

This transformer is a new type of transformer, which mainly satisfies the needs of short-time severe increase of electri -cal loads, so as to effectively cope with the rural demand for centralized electricity consumption at Spring Festivals and in summer. The core, with amorphous alloy as the magnetic conductive material, is featured by low loss, environmental protection and energy saving.

Model

S (B) H 15 –M– □ / 10 – 0.4

- 0.4 — LV side voltage
- 10 — HV side voltage
- □ — Capacity (KVA)
- M — Fully sealed
- 15 — Performance level
- H — Amorphous alloy
- (B) — Low voltage foil
- S — Three-phase oil-immersed transformer

Characteristics

1.High overload running capacity; highly heat-resistant material used for the insulation of the windings and the hot spots of the body to avoid insulation aging and ensure safe overload operation;
2.Core rolled from amorphous alloy strips that allows a less no-load loss by 80% than the S9 products;
3.Fully sealed corrugated fuel tank that keeps the core parts from open air, thus ensuring zero maintenance and long service life;
4.beautiful appearance and small space required;
5.Strong resistance to sudden short circuit.

Technical Specifications

1.Voltage class: 10kV, 6kV
2.Tapping range: ±2*2.5%, ±5%
3.Vector group: Yyn0, Dyn11
4.Capacitance range: for S(B)H15-M, 50, 100, 200kVA
5.Insulation level: 10kV L175 AC35
6.Voltage regulating mode: no excitation voltage regulation

Technical Parameters

S (B) H15-M

capacity (kVA)	Voltage combination			Vector group	No-load loss (W)	Load loss (W) 75℃	No-load current (%)	circuit impedance (%)
	High voltage (kV)	High voltage tapping range (%)	Low voltage (kV)					
50	10	±5	0.4	Dyn11 Yyn0	43	910/870	0.5	4
100	10.5	±2×2.5			75	1580/1500	0.45	
200					120	2730/2600	0.4	
Note: Dyn11 connection is applicable to the load losses above the slash in the cell, and Yyn0 connection applicable to those below the slash.								

6kV,10kV,11kV,12kV Oil-immersed Tridimensional Toroidal-core Transformer



Brief Introduction

This transformer is a new energy-saving product.Through the three-dimensional toroidal-core structure and process technology innovation, the no-load loss,no-load current and noise are minimized. It is suitable for three-phase 50Hz, 35kV and below power systems for industrial and agricultural electric power, power and lighting.

Model

S □—M·RL— □/□

- Voltage class (kV)
- Rated capacity (kVA)
- M - fully sealed; RL- tridimensional toroidal core
- Code of performance level 11, 13, 14
- Three-phase

Characteristics

1. Seamless core formed by continuously rolled silicon steel sheet, with the magnetic flux direction is completely consistent with the crystal orientation of the silicon steel sheet, which greatly reduces the no-load loss and no-load current;
2. Tridimensional toroidal core featured by low harmonic current;
3. Symmetrical three-phase magnetic circuit, with the three core pillars having the same short magnetic circuit, the same magnetic resistance and balanced three phases;
4. High-strength tridimensional triangular frame structure, ensuring uniform force on the body and strong short circuit resistance;
5. Lower noise by 10~20 dB than the transformers with a laminated core structure.

Technical Specifications

1.Voltage class: 10kV

2.Tapping range: ±2*2.5%, ±5%

3.Vector group: Yyn0, Dyn11

4.Capacitance range: for S11/S13-M, 30~1600kVA

5.Insulation level: 10kV LI75 AC35

6.Voltage regulating mode: no excitation voltage regulation

Technical Parameters

Rated capacity (kVA)	Voltage combination			Vector group	Short circuit impedance (%)	Load loss (W) 120℃	S11-M·RL		S13-M·RL	
	High voltage (kV)	High voltage tapping range (%)	Low voltage (kV)				No-load loss (W)	No-load current (%)	No-load loss (W)	No-load current (%)
30	6 6.3 10 10.5 11	±5 ±2 ×2.5%	0.4	Dyn11 Yyn0 Yzn11	4	630/600	100	0.33	80	0.28
50						910/870	130	0.3	100	0.23
80						1310/1250	180	0.29	130	0.18
100						1580/1500	200	0.18	150	0.17
125						1890/1800	240	0.26	170	0.16
160						2310/2200	280	0.25	200	0.16
200						2730/2600	340	0.24	240	0.14
250						3200/3050	400	0.23	290	0.13
315						3830/3650	480	0.22	340	0.13
400						4520/4300	570	0.21	410	0.13
500						5410/5150	680	0.21	480	0.12
630				Dyn11 Yyn0	4.5	6200	810	0.2	570	0.12
800						7500	980	0.2	700	0.12
1000						10300	1150	0.19	830	0.12
1250						12000	1360	0.18	970	0.12
1600						14500	1640	0.17	1170	0.12

6kV,10kV,11kV,12kV Oil-immersed Tridimensional Toroidal-core Transformer



Brief Introduction

This transformer has two automatic switching rated capacities, which may be automatically switched over according to the user load.It is generally applicable to places where the power has seasonal consumption, large load fluctuation, concentrated consumption, and low annual average load rate.

Model

S □–M– Z·T – □(□)/□

- Voltage class
- Capacity before regulation (after regulation)
- Capacity regulation
- On-load
- Fully sealed
- Loss level
- Three-phase

Characteristics

1.An automatic controller is provided to detect loads and realize automatic switchover between large and small capacities when the power is not cut off;

2.When the load decreases, in case of switchover from large capacity to small capacity, the no-load loss and load loss of the transformer are greatly reduced and thus achieve energy saving and consumption reduction.

Technical Specifications

1.Voltage class: 10kV

2.Tapping range: ±2*2.5%, ±5%

3.Capacitance range: for S11/S13-M- Z T, 160~630kVA

4.Insulation level: 10kV LI75AC35

5.Voltage regulating mode: no excitation voltage regulation

Technical Parameters

Rated capacity (kVA)	Voltage combination			Vector group	No-load loss (W)	Load loss (W) 120℃	No-load current (%)	Short circuit impedance (%)
	High voltage (kV)	High voltage tapping range (%)	Low voltage (kV)					
160 (50)	10 10.5	±4×2.5 ±3×2.5 ±2×2.5	0.4	Dyn11 (Yyn0)	280 (130)	2590 (1030)	1.6 (0.9)	4.0(4.0)
200 (63)					340 (150)	3215 (1230)	1.5 (0.9)	
250 (80)					400 (180)	3780 (1480)	1.4 (0.7)	
315 (100)					570 (240)	4540 (1770)	1.4 (0.7)	
400 (125)					570 (240)	5480 (2130)	1.3 (0.6)	
500 (160)					680 (280)	6520 (2600)	1.2 (0.6)	
630 (200)					810 (340)	8030 (3060)	1.1 (0.5)	

Note: The data in parentheses are those after capacity regulation.

13.8kV,15kV,20kV ,22kV,24kV Oil-immersed Distribution Transformer



Brief Introduction

As a fully sealed distribution transformer, it is applicable to 20kV/0.4kV, 50Hz distribution and transformation systems for wide application in various residential and commercial buildings, public facilities, industrial and mining enterprises, power generation enterprises and urban and rural power grids.

Model

S □-M - □ / □

- Voltage class
- Rated capacity
- Fully sealed
- Code of loss level, (11/13)
- Three-phase oil-immersed transformer

Characteristics

1. Core made of high quality silicon steel sheet, with 45° inclined multi-seam, high lamination coefficient, low no-load loss and low noise;
2. Fully sealed corrugated fuel tank that keeps the core parts from open air, thus ensuring zero maintenance and long service life;
3. Mistake-proofing scheme realizing stable product quality, strong overload capability and strong short-circuit tolerance;
4. Beautiful appearance and small space required.

Technical Specifications

1.Voltage class: 20kV
2.Tapping range: ±2*2.5%, ±5%
3.Vector group: Yyn0, Dyn11
4.Capacitance range: for S11-M, 30~2500kVA; for S13-M, 30~1600kVA
5.Insulation level: 20kV LI25 AC50
6.Voltage regulating mode: no excitation voltage regulation

Technical Parameters

S11(13)-M

Rated capacity (kVA)	Voltage combination			Vector group	Load loss (W) 120℃	S11		S13		Short circuit impedance (%)
	High voltage (kV)	High voltage tapping range (%)	Low voltage (kV)			No-load loss (W)	No-load current (%)	No-load loss (W)	No-load current (%)	
30	20	±5 ±2×2.5	0.4	Yyn0 Yzn11 Dyn11	690/660	100	2.1	80	2.0	5.5
50					1010/960	130	2.0	100	1.9	
63					1200/1150	150	1.9	110	1.8	
80					1440/1370	180	1.8	130	1.7	
100					1730/1650	200	1.6	150	1.5	
125					2080/1980	240	1.6	170	1.5	
160					2540/2420	290	1.4	200	1.3	
200					3000/2860	310	1.3	140	1.2	
250					3520/3360	400	1.2	190	1.1	
315					4210/4010	480	1.1	340	1.0	
400					4970/4730	570	1.0	410	0.9	
500					5940/5660	680	1.0	480	0.9	
630					6820	810	0.9	570	0.8	6
800					8250	980	0.8	700	0.7	
1000					11330	1150	0.7	830	0.6	
1250					13200	1380	0.7	970	0.6	
1600					15950	1660	0.6	1170	0.5	
2000					19140	1950	0.6	1380	0.5	
2500					22220	2340	0.5	1640	0.4	

Note: 1. As for transformers with rated capacity of 500kVA and below, Yzn11 or Dyn11 connection is applicable to the load losses above the slash in the cell, and Yyn0 connection applicable to those below the slash.
2. If required by users, a transformer with a low voltage of 0.69kV is available.

30kV,33kV,34.5kV,35kV,38kV Oil-immersed Power Transformer



Brief Introduction

This series is suitable for 35kV, 50Hz power transmission and transformation systems. It may be used as the main transformer in upgraded urban and rural power grids, industrial and mining enterprises and 35kV substations. Long-distance voltage regulation of such an on-load transformer is allowed.

Model

S Z □ – □ / □

- Voltage class
- Rated capacity
- Code of loss level
- (Z) On load ( ) No excitation
- Three-phase oil-immersed transformer

Characteristics

1. Core made of high quality silicon steel sheet, with 45° inclined multi-seam, high lamination coefficient, low no-load loss and low noise;
2. Folding fuel tank guaranteeing a high mechanical strength and less welds, thus lowering the risk of leakage;
3. Mistake-proofing scheme realizing stable product quality, strong overload capability and strong short-circuit tolerance;
4. Beautiful appearance and small space required.

Technical Specifications

Voltage class: 35kV

Tapping range: ±2*2.5%, ±5%

Vector group: Yyn0, Dyn11

Capacitance range: for S11-M, 800~25000kVA

Voltage regulating mode: no excitation voltage regulation, on-load voltage regulation

Technical Parameters

S11 35kV three-phase dual winding no excitation voltage regulation transformer

Rated capacity (kVA)	Voltage combination			Vector group	No-load loss (W)	Load loss (W) 120℃	No-load current (%)	Short circuit impedance (%)
	High voltage (kV)	High voltage tapping range (%)	Low voltage (kV)					
800	35 38.5	±5% ±3×2.5%	3.15 6.3 10.5	Yd11	984	9405	1.0	6.5
1000					1152	11542.5	1.0	
1250					1408	13936.5	0.9	
1600					1696	16672.5	0.8	
2000					2176	18382.5	0.7	
2500					2560	19665	0.6	
3150					3040	23085	0.56	7
4000					3616	27360	0.56	
5000					4320	31378.5	0.48	
6300					5248	35055	0.48	
8000		±2×2.5 ±3×2.5	3.15 3.3 6.3 6.6 10.5	Ynd11	720	38475	0.42	7.5
10000					870	45315	0.42	
12500					1008	53865	0.4	
16000					1216	65835	0.4	
20000					1440	79515	0.4	8
25000					1702	94050	0.32	
315000					2022	112860	0.32	

S11 35kV three-phase dual winding on-load voltage regulation transformer

Rated capacity (kVA)	Voltage combination			Vector group	No-load loss (W)	Load loss (W) 75℃	No-load current (%)	Short circuit impedance (%)
	High voltage (kV)	High voltage tapping range (%)	Low voltage (kV)					
2000	35 38.5	±3×2.5%	3.15 3.3 6.3 6.6 10.5	Yd11	2.30	19.24	0.8	6.5
2500					2.72	20.64	0.8	
3150					3.23	24.71	0.72	
4000					3.87	29.16	0.72	7
5000					4.64	34.20	0.68	
6300					5.63	36.77	0.68	7.5
8000				Ynd11	7.87	40.61	0.60	
10000					9.28	48.05	0.60	
12500					10.94	56.86	0.56	
16000					13.17	70.32	0.54	
20000					15.57	82.78	0.54	8
25000					17.80	98.80	0.45	
31500					21.30	121.90	0.40	

220 (110) kV Railway Traction Transformer



Product Introduction

1. Utilization of DuPont's Nomex insulation system, registered trademark: Anleide.
2. Advanced seven-level temperature control technology.
3. High overload capacity: Meets typical overload curves, capable of sustained 30% overload.
4. Low partial discharge: Routine Partial discharge is less than 40pC.
5. Short-circuit withstand capability: Meets the operational characteristics of frequent near-end short circuits in electrified railways.

Scope of Application

Suitable for electrified high-speed railway passenger dedicated lines as well as heavy-duty freight dedicated lines

220kV, 110kV (66kV) Power Transformer



Product Introduction

1. Adopting a fully enclosed manufacturing process with constant temperature,humidity, and dust control to ensure lean and controlled product quality.
2. Utilizing the original "Seven-level Temperature Control Technology" system in conjunction with finite element analysis of temperature distribution to fully leverage the performance advantages of various insulation materials.
3. Implementing unique noise-reduction methods in different components to ensure noise levels surpass national standards.
4. Employing one-time molding technology for sealing components and conducting multiple leakage tests, including fluorescent, positive pressure, and negative pressure methods, to ensure leakage-free products.
5. The core adopts Swiss advanced stacking manufacturing technology & production process, with low no-load loss.
6. Successfully passing the short-circuit test conducted by the National Transformer Testing Center, ensuring the safety and reliability of the product

Scope of Application

It is beneficial for meeting peak electricity demand during summer and is suitable for high-load distribution networks in high-temperature environments.It is also suitable for locations with impact loads and continuous overload requirements, such as the steel and metallurgical industry, railway transportation, power plants, hydroelectric stations, etc

DRY TYPE TRANSFORMER

PRODUCTS STANDARDS

IEC 60076-1 Power transformers-Partl:General

IEC 60076-12 Power transformers-Part 12:Loading guide for dry-type power transformers

IEC60076-1 Dry Type Transformer

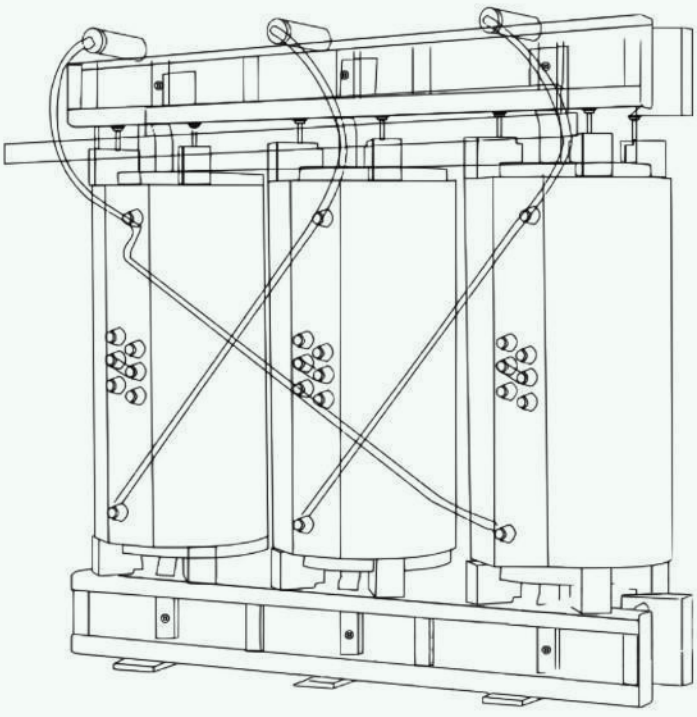

10kV/6kV Dry-type Amorphous Alloy Distribution Transformer

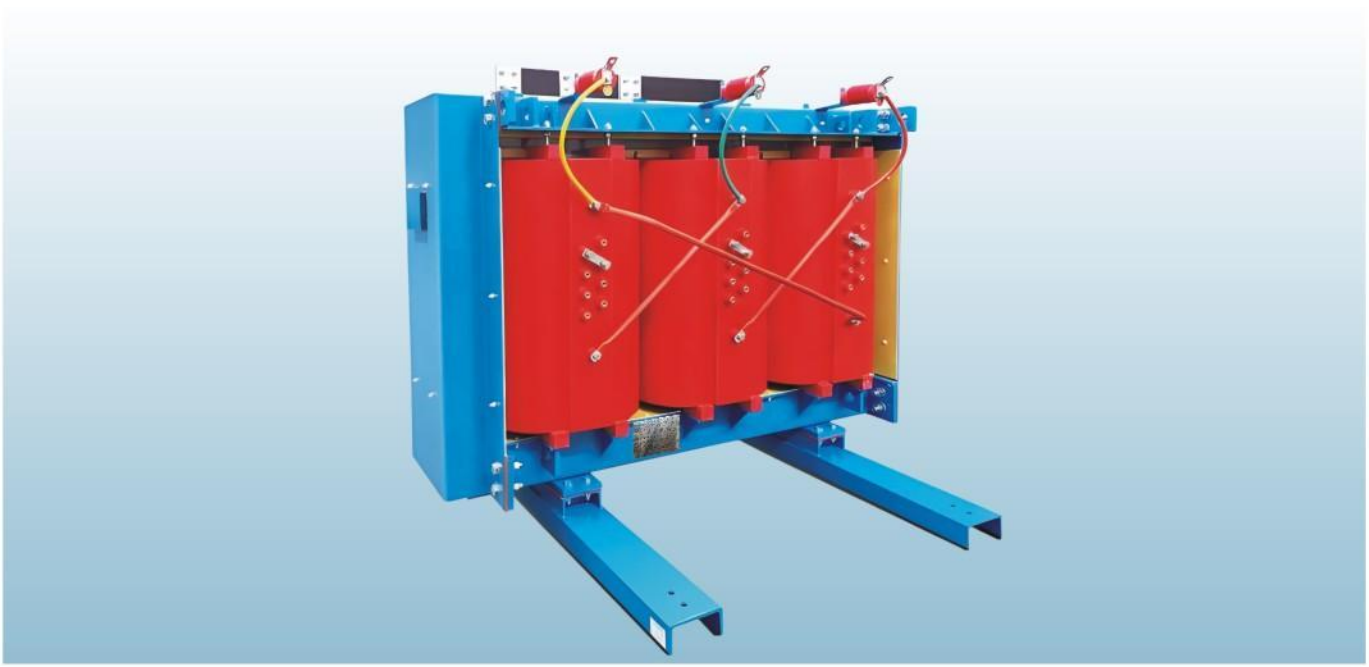

Product Introduction

This amorphous alloy dry type transformer is a new type of high efficiency and energy saving transformer that has good economic and social benefits and is widely used in airports, stations, urban power grids, high-rise buildings and power plants.

Model

SC B H 15 – □ / □

- Rated high voltage (kV)
- Rated capacity (kVA)
- Performance level
- Amorphous alloy core
- Low voltage foil
- Three phases, molded by casting

Characteristics

1. The transformer, with amorphous alloy as the magnetic conductive material, is featured by environmental protection and energy saving, with a no-load loss 70%~80% lower than the specified value in GB/T 10228.
2. The product adopts a three-phase five-pillar structure, and a frame structure for core protection, which forms a compact and reasonable structure.
3. The coil adopts vacuum pressure mirror casting process for beautiful appearance and strong resistance to sudden short circuit.
4. The product has small partial discharge, good thermal stability, low noise and strong overload capability
5. It is maintenance free and widely used in commercial buildings and load center areas.

Technical Specifications

1.Voltage class: 6kV, 10kV
2.Tapping range: ±2*2.5%, ±5%
3.Vector group: Dyn11, Yyn0
4.Capacitance range: 200~2500kVA
5.Insulation level: 6kV LI60 AC20, 10kV LI75 AC35
6.Insulation class: Class F or H
7.Voltage regulating mode: no excitation voltage regulation

Technical Parameters

10kV/6kV Dry-type amorphous alloy core distribution transformer

Rated capacity (kVA)	Voltage combination			Vector group	No-load loss (W)	Load loss (W)		No-load current (%)	Short circuit impedance (%)
	High voltage (kV)	High voltage tapping range (%)	Low voltage (kV)			F(120℃)	H(145℃)		
200	6 6.3 6.6 10 10.5 11	±5 or ±2×2.5	0.4	Dyn11 or Yyn0	200	2530	2710	1.0	4.0
250					230	2760	2960	1.0	
315					280	3470	3730	0.9	
400					310	3990	4280	0.8	
500					360	4880	5230	0.8	
630					420	5880	6290	0.7	
630					410	5960	6400	0.7	6.0
800					480	6960	7460	0.7	
1000					550	8130	8760	0.6	
1250					650	9690	10370	0.6	
1600					760	11730	12580	0.6	
2000					1000	14450	15560	0.5	
2500					1200	17170	18450	0.5	

Installation Dimension(mm)

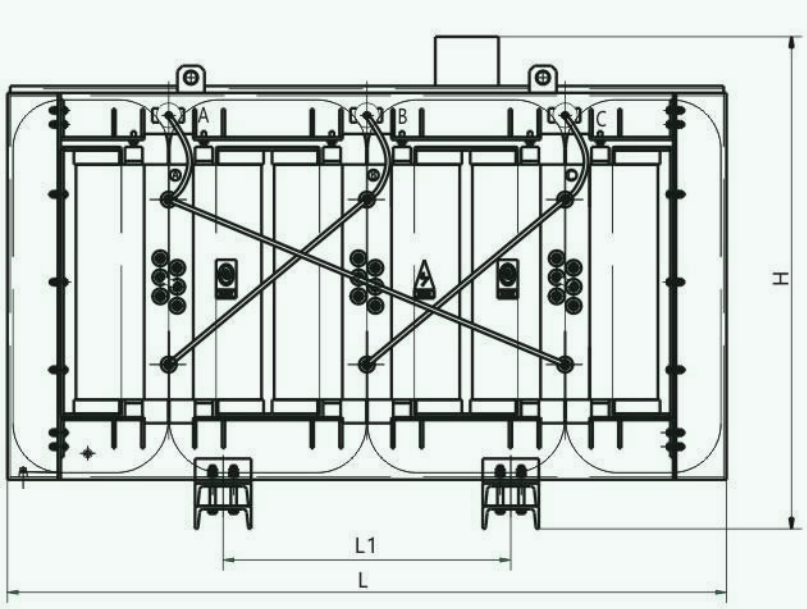

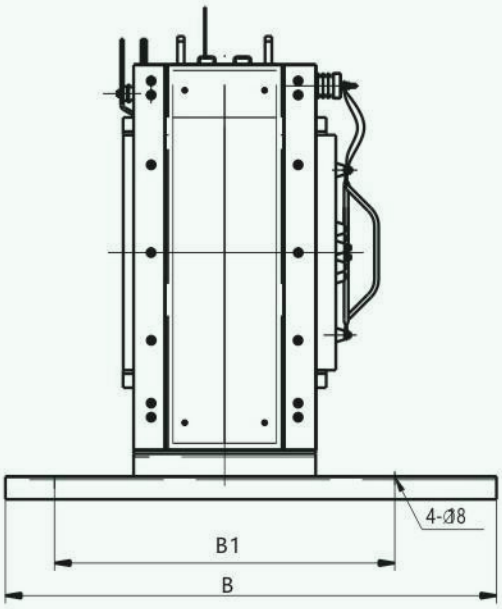

10kV/6kV Dry-type Distribution Transformer



Product Introduction

This dry-type transformer is an epoxy resin-encapsulated typewith an H-class insulation, which is realized through the third-generation German HTT advanced technology and vacuum pressure mirror casting process based on H-class insulation material.

It is applicable to 35kV and below, 50Hz or 60Hz distribution and transmission systems, for wide application in various residential and commercial buildings, public facilities, industrial and mining enterprises, power generation enterprises and urban and rural power grids. It is the most ideal environment-friendly power supply and distribution equipment.

Model

SC (Z) – B □–□ / □

- Rated high voltage (kV)
- Rated capacity (kVA)
- Performance level(10, 11, 12, 13)
- Low voltage foil
- On-load capacity regulation
- Three phases, molded by casting

Characteristics

1. The coil adopts vacuum pressure mirror casting process for beautiful appearance and strong resistance to sudden short circuit.
2. The core is made of high quality silicon steel sheet, with 45° inclined multi-seam, high lamination coefficient, low no -load loss and low noise.
3. The product has small partial discharge, good thermal stability, low noise and strong overload capability
4. It is maintenance free and widely used in commercial buildings and load center areas.

Technical Specifications

1.Voltage class: 6kV, 10kV
2.Tapping range: ±2*2.5%, ±5%
3.Vector group: Dyn11, Yyn0
4.Capacitance range: 30~2500kVA
5.Insulation level: 6kV LI60 AC20, 10kV LI75 AC35
6.Insulation class: Class F or H
7.Voltage regulating mode: no excitation voltage regulation or on-load capacity regulation

Technical Parameters

SCB10(11, 12) 10kV/6kV no excitation voltage regulation distribution transformer

Rated capacity (kVA)	Voltage combination			Vector group	No-load loss (W) of SCB10	No-load loss (W) of SCB11	No-load loss (W) of SCB12	Load loss (W)		No-load current (%)	Short circuit impedance (%)
	High voltage (kV)	High voltage tapping range (%)	Low voltage (kV)					F(120℃)	H(145℃)		
30	6 6.3 6.6 10 10.5 11	±5 or ±2×2.5	0.4	Dyn11 or Yyn0	190	170	150	710	760	2.3	4.0
50					270	240	215	1000	1070	2.2	
80					370	330	295	1380	1480	1.7	
100					400	350	320	1570	1680	1.7	
125					470	420	375	1850	1980	1.5	
160					540	480	430	2130	2280	1.5	
200					620	550	495	2530	2710	1.3	
250					720	640	575	2760	2960	1.3	
315					880	780	705	3470	3720	1.1	
400					980	860	785	3990	4280	1.1	
500					1160	1030	930	4880	5230	1.1	
630					1340	1190	1070	5880	6290	0.9	
630					1300	1150	1040	5960	6390	0.9	6.0
800					1520	1350	1215	6960	7460	0.9	
1000					1770	1580	1415	8130	8710	0.9	
1250					2090	1860	1670	9690	10380	0.9	
1600					2450	2170	1960	11730	12550	0.9	
2000					3050	2710	2440	14450	15470	0.7	
2500					3600	3190	2880	17170	18380	0.7	
3150					4280	3850	3460	20540	21990	0.8	

Technical Specifications

Outline dimensions of SCB 10(11, 12, 13) 10kV/6kV distribution transformer

Rated capacity (kVA)	Housing without protection (mm)						Housing with protection (mm)		
	L	B	H	L1	B1	Weight (kg)	L2	B2	H2
30	810	1200	760	400	400	470	1600	1200	1900
50	810	1200	850	400	400	560	1600	1200	1900
80	890	1200	860	400	400	635	1600	1200	1900
100	935	1200	900	550	720	760	1600	1200	1900
125	935	1200	950	550	720	820	1600	1200	1900
160	1030	1200	965	550	720	950	1600	1200	1900
200	1030	1200	965	550	720	1010	1600	1200	1900
250	1110	1200	1000	550	720	1110	1600	1200	1900
315	1120	1200	1040	660	820	1170	1600	1200	1900
400	1100	1200	1115	660	820	1340	1600	1200	1900
500	1140	1300	1150	660	820	1510	1700	1300	1900
630	1320	1300	1105	820	820	1810	1800	1300	1900
800	1420	1400	1145	820	820	2140	1900	1400	1900
1000	1420	1400	1195	820	820	2630	2000	1400	1900
1250	1450	1400	1265	820	820	3030	2000	1400	1900
1600	1590	1500	1300	820	1070	3640	2200	1500	1900
2000	1640	1500	1430	1070	1070	4220	2200	1500	2200
2500	1740	1550	1500	1070	1070	5090	2400	1550	2200
3150	1800	1550	1785	1070	1070	6260	2400	1550	2200

Note: The overall dimensions listed in the above table are for reference only, and the product outline drawing shall prevail.

Technical Specifications

SCZB10(11) 10kV on-load voltage regulation distribution transformer

Rated capacity (kVA)	Voltage combination			Vector group	No-load loss (W) of SCB11	No-load loss (W) of SCB12	Load loss (W)		No-load current (%)	Short circuit impedance (%)	L	B	H	L1	Weight (kg)
	High voltage (kV)	High voltage tapping range (%)	Low voltage (kV)				F(120℃)	H(145℃)							
315	6 6.3 6.6 10 10.5 11	±4 ×2.5%	3.15 6 6.3 10 10.5 11	Dyn11 or Yyn0	990	890	3600	3860	1.4	4.0	1600	1600	2200	660	1660
400					1120	1000	4270	4570	1.4		1600	1600	2200	660	1830
500					1290	1160	5220	5590	1.4		1700	1700	2200	660	2010
630					1440	1290	6360	6810	1.2	6.0	1800	1700	2200	820	2320
800					1710	1540	7500	8030	1.2		1900	1800	2200	820	2670
1000					1980	1780	8780	9400	1.0		2000	1800	2200	820	3170
1250					2340	2100	10450	11190	1.0		2000	1800	2200	820	3570
1600					2720	2440	12440	13320	1.0		2200	1900	2200	820	4210
2000					3420	3070	15200	16270	0.8		2200	1900	2200	1070	4790
2500					3960	3560	18140	19420	0.8		2400	2000	2200	1070	5690

Note: The overall dimensions listed in the above table are for reference only, and the product outline drawing shall prevail.

Installation Dimension(mm)

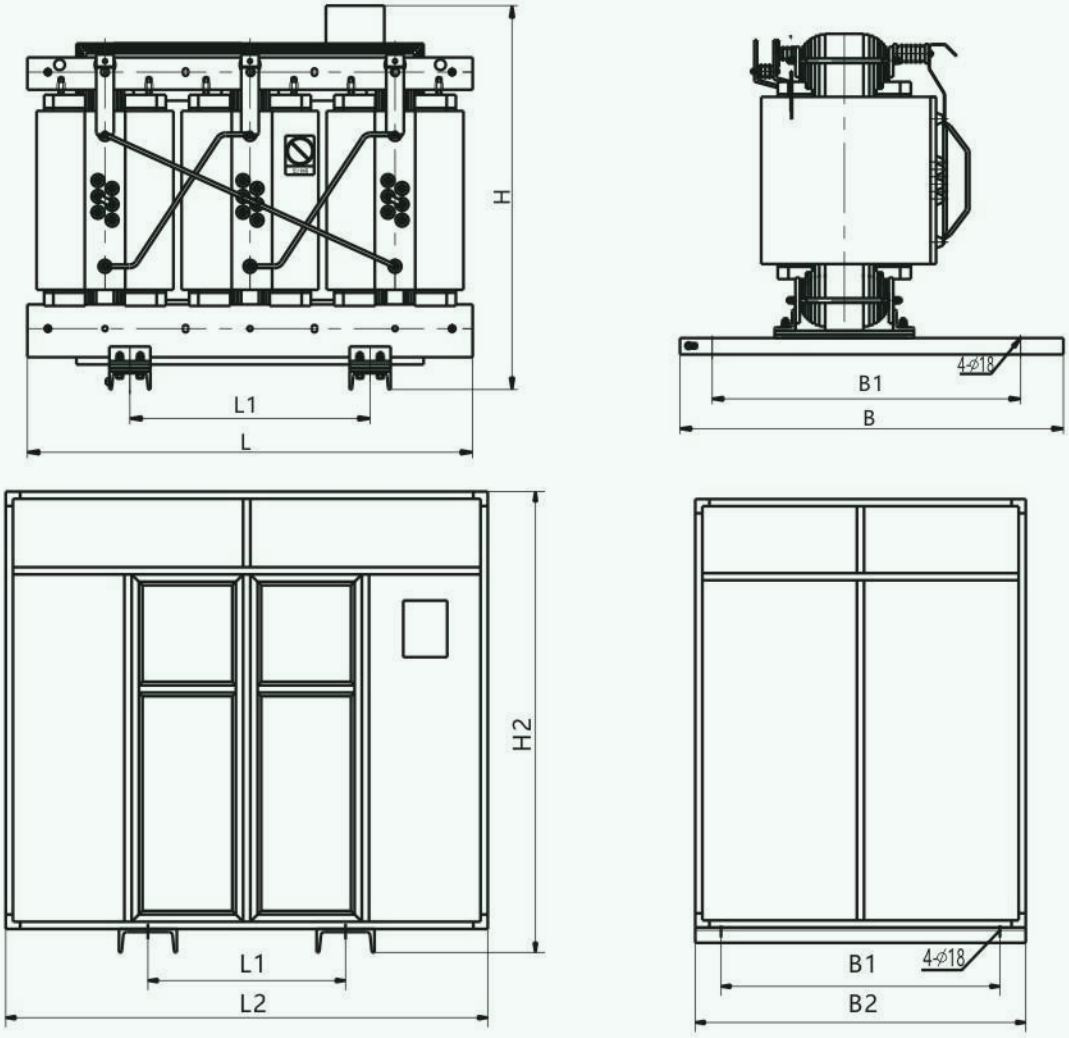

Note: The outline drawing is suitable for three models.

20kV Dry-type Distribution Transformer



Product Introduction

This dry-type transformer is an epoxy resin-encapsulated type with an H-class insulation, which is realized through the third-generation German HTT advanced technology and vacuum pressure mirror casting process based on H-class insulation material.It is applicable to 35kV and below, 50Hz or 60Hz distribution and transmission systems, for wide application in various residential and commercial buildings,public facilities, industrial and mining enterprises, power generation enterprises and urban and rural power grids. It is the most ideal environment-friendly power supply and distribution equipment.

Model

SC (Z) – B □–□ / □

- Rate high voltage (kV)
- Rated capacity (kVA)
- Performance level (10, 11, 12, 13)
- Low voltage foil
- On-load capacity regulation
- Three phases, molded by casting

Characteristics

1. The coil adopts vacuum pressure mirror casting process for beautiful appearance and strong resistance to sudden short circuit;
2. The core is made of high quality silicon steel sheet, with 45° inclined multi-seam, high lamination coefficient, low no -load loss and low noise;
3. The product has small partial discharge, good thermal stability, low noise and strong overload capability;
4. It is maintenance free and widely used in commercial buildings and load center areas.

Technical Specifications

1.Voltage class: 35kV(36.5kV, 38.5kV, etc.)
2.Tapping range: ±2*2.5%, ±5%
3.Vector group: Dyn11, Yd11, YNd11, etc.
4.Capacitance range: 800~25000kVA
5.Insulation level: 35kV LI170AC70, 10kV LI75AC35
6.Insulation class: Class F or H
7.Voltage regulating mode: no excitation voltage regulation or on-load capacity regulation

Technical Parameters

SCB10(11) 20kV

Rated capacity (kVA)	Voltage combination			Vector group	No-load loss (W) of SCB10	No-load loss (W) of SCB11	Load loss (W)		No-load current (%)	Short circuit impedance (%)
	High voltage (kV)	High voltage tapping range (%)	Low voltage (kV)				F (120℃)	H (145℃)		
200	20 22 24	±5 or ±2×2.5	0.4	Dyn11 or Yyn0	735	660	2940	3150	1.8	6.0
250					845	760	3420	3670	1.6	
315					970	870	4080	4370	1.6	
400					1150	1030	4840	5190	1.4	
500					1350	1210	5790	6200	1.4	
630					1530	1370	6840	7330	1.2	
800					1755	1570	8260	8850	1.2	
1000					2070	1860	9780	10470	1.0	
1250					2385	2140	11540	12360	1.0	
1600					2790	2510	13870	14850	1.0	
2000					3240	2910	16380	17540	0.8	
2500					3870	3480	19380	20750	0.8	

Outline dimensions

Rated capacity (kVA)	Housing without protection (mm)						Housing with protection (mm)		
	L	B	H	L1	B1	Weight (kg)	L2	B2	H2
200	1100	1400	1200	550	720	1010	2000	1400	1900
250	1210	1400	1260	550	720	1200	2000	1400	1900
315	1280	1400	1250	660	820	1360	2100	1400	1900
400	1300	1400	1295	660	820	1580	2100	1400	1900
500	1350	1500	1340	660	820	1850	2200	1500	1900
630	1480	1500	1415	820	820	2230	2300	1500	1900
800	1570	1500	1500	820	820	2490	2400	1500	2000
1000	1630	1500	1590	820	820	2950	2400	1500	2200
1250	1790	1600	1750	820	820	3290	2500	1600	2300
1600	1820	1600	1780	820	1070	4230	2600	1600	2300
2000	1950	1700	1850	1070	1070	5180	2700	1700	2400
2500	2050	1800	1950	1070	1070	6010	2800	1800	2500

Note: The overall dimensions listed in the above table are for reference only, and the product outline drawing shall prevail.

20kV Dry-type Distribution Transformer

Installation Dimension(mm)

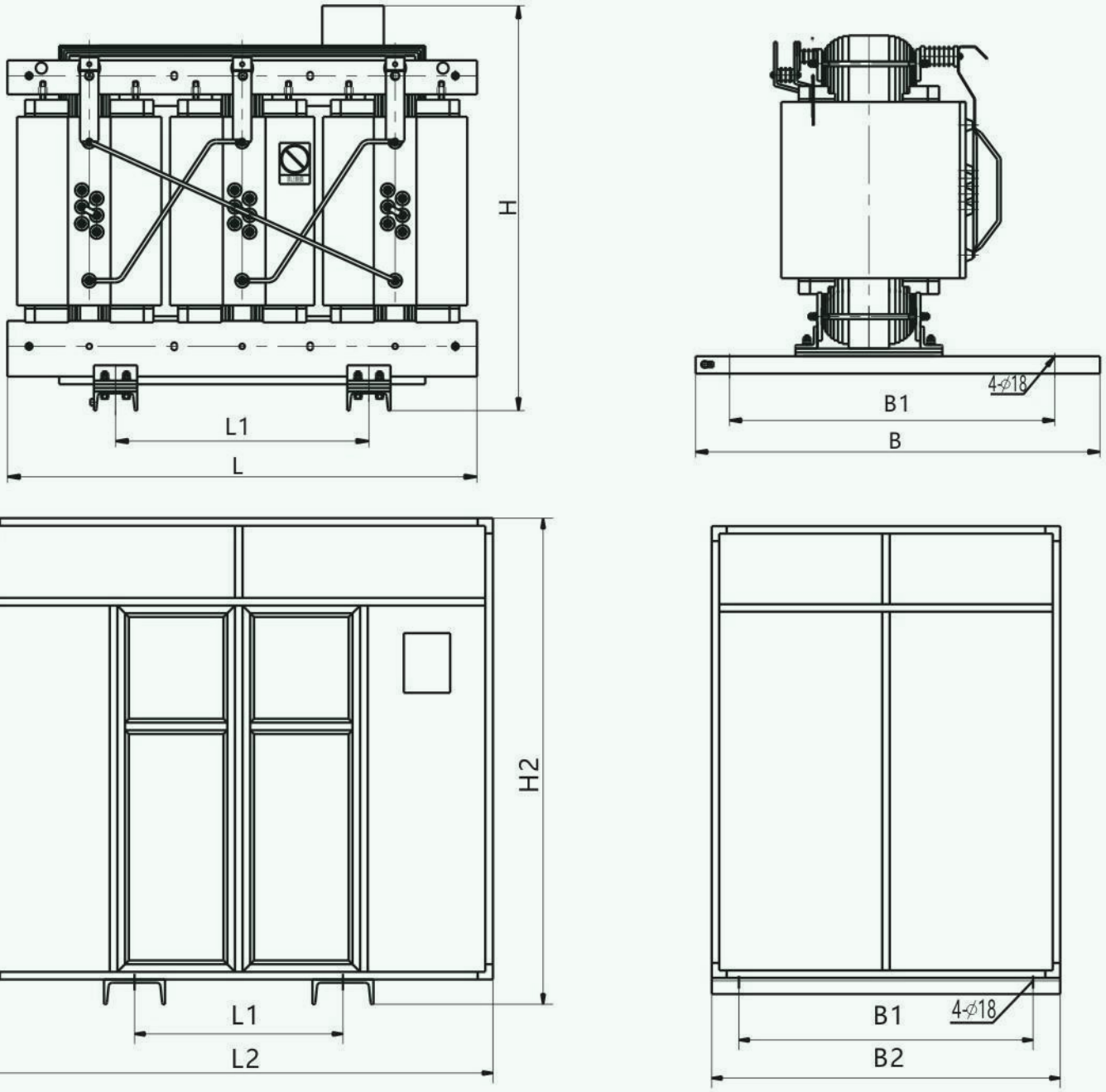

35kV Dry-type Power Transformer



Product Introduction

This power transformer is a transformer with high electrical strength, mechanical strength and heat resistance. It is fireproof, flame retardant, and harmless to environment, can be installed deep inside a load center and is featured by low installation cost and simple maintenance. Such product can be widely applied in high-rise buildings, airports, power stations, commercial centers, upgraded urban power grids and other important places.

Model

SC (Z) – 10 – □ / □

- Rated high voltage (kV)
- Rated capacity (kVA)
- Performance level
- On-load capacity regulation
- Three phases, molded by casting

Characteristics

1. The coil adopts vacuum pressure mirror casting process for beautiful appearance and strong resistance to sudden short circuit;
2. The core is made of high quality silicon steel sheet, with 45° inclined multi-seam, high lamination coefficient, low no -load loss and low noise;
3. The product has small partial discharge, good thermal stability, low noise and strong overload capability;It is maintenance free and widely used in commercial buildings and load center areas.

35kV Dry-type Power Transformer

Technical Specifications

1.Voltage class: 35kV (36.5kV, 38.5kV, etc.)
2.Tapping range: ±2*2.5%, ±5%
3.Vector group: Dyn11, Yd11, YNd11, etc.
4.Capacitance range: 800~25000kVA
5.Insulation level: 35kV LI170AC70, 10kV LI75AC35
6.Insulation class: Class F or H
7.Voltage regulating mode: no excitation voltage regulation or on-load capacity regulation

Technical Parameters

35KV no excitation voltage regulation power transformer

Rated capacity (kVA)	Voltage combination			Vector group	No-load loss (W)	Load loss (W)		No-load current (%)	Short circuit impedance (%)	L (Length)	W (Width)	H (Height)	L1 (Transverse gauge)	B1 (Longitudinal gauge)	Weight (kg)
	High voltage (kV)	High voltage tapping range (%)	Low voltage (kV)			F(120C)	H(145C)								
800	35~38.5	±5 or ±2×2.5%	3.15 6 6.3 10 10.5 11	Dyn11, Yd11 or Yyn0	2250	9400	10070	1.1	6.0	2050	1400	2030	820	820	3440
1000					2670	10920	11690	1.1		2010	1400	1950	820	820	4530
1250					3130	12920	13830	1.0		2240	1400	2030	820	820	5060
1600					3690	15480	16570	1.0		2440	1500	2365	820	820	6060
2000					4230	18240	19530	0.9	7.0	2650	1500	2350	1070		8380
2500					4860	21850	23390	0.9		2760	1600	2460	1070		8940
3150					6030	24510	26240	0.8	8.0	2790	1600	2270	1070		9650
4000					7020	29450	31530	0.8		2930	1700	2360	1475		10530
5000					8370	34960	37430	0.7		2935	1700	2700	1475		12860
6300					9900	40850	43730	0.7		3450	1700	2750	2050		16750
8000					11340	46070	49320	0.6	9.0	3385	1700	2790	2050		18410
10000				Dyn11, Yd11 or YNd11	12960	55570	59490	0.6		3970	1800	3080	2300		28150
12500			6 6.3 10 10.5 11		15750	64600	69150	0.5		4180	1800	3270	2300		34920
16000					19350	76000	81360	0.5		4360	1800	3290	2560		37710
20000					22950	85500	91530	0.4	10.0	4370	1800	3330	2560		42050
25000					27100	101000	108100	0.4		4780	1800	3590	2560		60920

Note: The overall dimensions listed in the above table are for reference only, and the product outline drawing shall prevail.

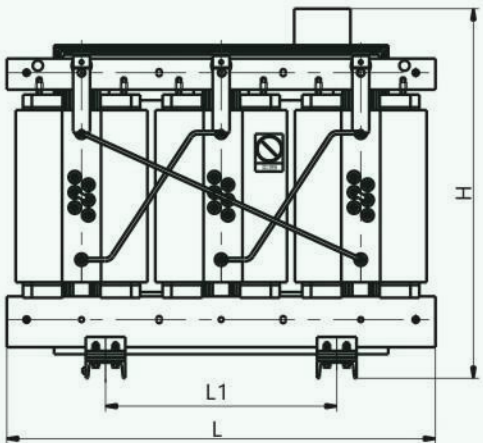

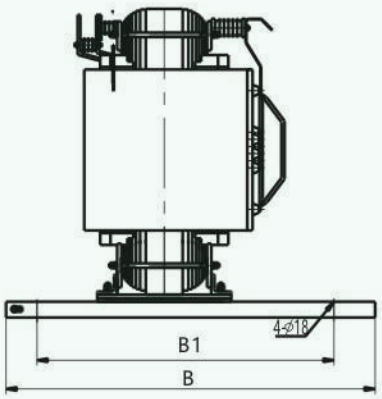

SJD-Dry or Oil-immersed Earthing transformer (Popular products)

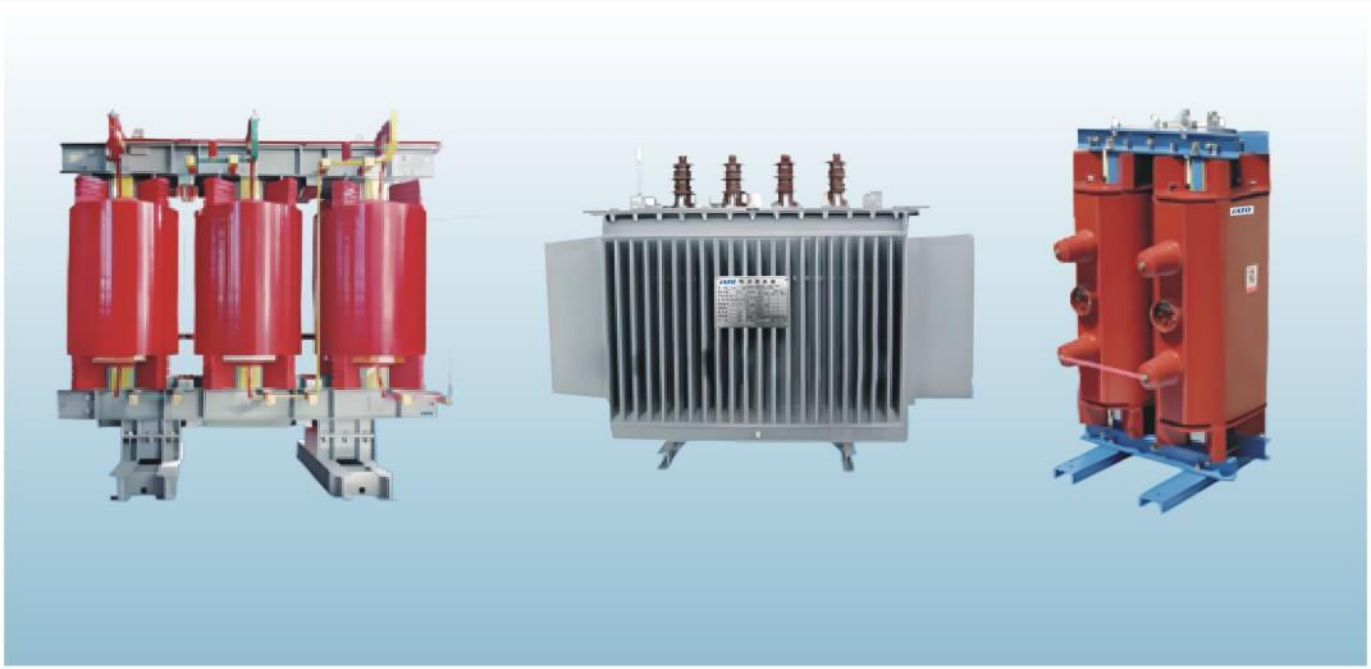

Product Introduction

The 6kV,10kV,and 35kV power grids in the power system generally adopt a neutral point ungrounded operation mode.The low-voltage side of the main transformer in the power grid is generally connected in a delta configuration,and there is no neutral point that can be grounded. With the continuous expansion of urban power grids and the increasing number of cable outlets, the system's capacitance current to ground increases sharply, and the capacitance current flowing through the fault point after single-phase grounding is relatively large (exceeding 1oA). In order to reduce the ground capacitance current during single-phase grounding faults,compensation devices such as arc suppression coils need to be installed at the neutral point of the transformer. Therefore, a neutral point needs to be artificially established to connect the arc suppression coil at the neutral point, reduce the ground short-circuit breaking current, and improve the reliability of the system power supply. In addition, single-phase grounding is a common fault during the operation of the generator, and the occurence of arc grounding at the fault point will further expand the insulation damage of the stator winding. The high resistance grounding of the neutral point of the generator can effectively suppress the grounding fault current of the generator,thereby preventing the stator winding of the generator from burning out and reducing the transient overvoltage of arc grounding. For this purpose, our company has developed a motor neutral point grounding resistor cabinet for single-phase grounding faults in motors. It mainly consists of a single-phase grounding transformer and a resistor, which can effectively avoid damage to the generator stator winding and insulation caused by grounding current.

Product Features

Our company produces professional 6kV,10kV,20kV,and 35kV grounding transformers,including epoxy cast dry-type and oil immersed grounding transformers, as well as single-phase grounding transformers specifically designed for motors.

A. Iron core

High quality cold-rolled oriented silicon steel sheets are used, with 45 ° full diagonal joints. The iron yoke is clamped with a through screw, and the core column is tied with fiberglass tape. The surface of the iron core is sprayed with silicone resin adhesive to prevent moisture,tighten and minimize noise.

B. Winding

Both the inner and outer windings are made of high-quality copper wires,with asegmented cylindrical structure to enhance interlayer insulation. Vacuum drying technology is used, and the formed windings have good electrical performance, high mechanical strength, and low local discharge capacity.

C. Epoxy resin is not filled with vacuum casting for dry-type grounding transformers, which has stronger smoke and water resistance compared to non encapsulated products. The oil immersed grounding transformer adopts a fully sealed structure and uses corrugated fins for heat dissipation to eliminate the oil storage tank. The oil tanks are sealed with oil resistant rubber strips to prevent the transformer oil from coming into contact with air. The transformer oil does not come into contact with air, ensuring the insulation performance and service life of the product. The product has the characteristics of small footprint, beautiful appearance,and maintenance free.

D. Protective device

Oil immersed grounding transformers are equipped with pressure relief valves and gas relays, as well as oil level gauges for easy monitoring of transformer oil levels at any time. The dry-type grounding transformer is equipped with a temperature control device and has remote transmission function, making it convenient to inspect the operating temperature of the product at any time.

Technical Parameters

Types	SJD Dry or Oil immersed
Connection group	(ZN (Zigzag), ZNyn, YNd(open), Ii0)
Voltage	Up to 36kV
Current	Up to 3000A*
Duty (Seconds)	10/30/60 or others
Cooling Method	ONAN, ONAF, AN, AF
Frequency	50Hz / 60Hz
Installation	Indoor / Outdoor
Ambient Temperature	-40 ℃ to 40 ℃*
Standards	IEC 60076-6, IEC60076- 1,IEEE
Enclosure Options	Transformer cabinet for any IP degrees with: -CT -VT -Isolation switch

SJD-Dry or Oil-immersed Earthing transformer(Popular products)

Item&Specs.	Ground-fault Current I_0	Time	Impedance Z_0
SJD-4.16KV/200A-10S	200A	10S	2.4~12.0Ω
SJD-4.16KV/400A-10S	400A	10S	1.2~6.0Ω
SJD-4.16KV/600A-10S	600A	10S	0.8~4.0Ω
SJD-12.47KV/200A-10S	200A	10S	7.2-36.0Ω
SJD-12.47KV/400A-10S	400A	10S	3.6-18.0Ω
SJD-12.47KV/600A-10S	600A	10S	2.4~12.0Ω
SJD-13.2KV/200A-10S	200A	10S	7.6~38.1Ω
SJD-13.2KV/400A-10S	400A	10S	3.8~19.1Ω
SJD-13.2KV/600A-10S	600A	10S	2.5~12.7Ω
SJD-13.8KV/200A-10S	200A	10S	8.0~39.8Ω
SJD-13.8KV/400A-10S	400A	10S	4.0~19.9Ω
SJD-13.8KV/600A-10S	600A	10S	2.6~13.3Ω
SJD-13.8KV/800A-10S	800A	10S	2.0~10.0Ω
SJD-24.94KV/200A-10S	200A	10S	14.4~72.0Ω
SJD-24.94KV/400A-10S	400A	10S	7.2~36.0Ω
SJD-24.94KV/600A-10S	600A	10S	4.8~24.0Ω
SJD-24.94V/800A-10S	800A	10S	3.6~18.0Ω
SJD-24.94V/1000A-10S	1000A	10S	2.8~14.4Ω
SJD-34.5KV/200A-10S	200A	10S	14.1~70.7Ω
SJD-34.5KV/400A-10S	400A	10S	7.0~35.4Ω
SJD-34.5KV/600A-10S	600A	10S	4.7~23.6Ω
SJD-34.5V/800A-10S	800A	10S	34~17.7Ω
SJD-34.5V/1000A-10S	1000A	10S	2.8~14.2Ω

ZGS series Prefabricated Substation



Product Introduction

1. The product has the advantages of compact structure, small volume, short construction cycle and easy installation and movement.
2. The shell adopts fully sealed design, with good protection effect.
3. The substation adopts unique guiding ventilation technology, with good heat dissipation effect and strong overload capacity.
4. Various power supply schemes of terminal or ring network can be adopted, with long service life and maintenance free.
5. Dry type, oil type, amorphous alloy and other types of transformers can be configured according to user requirements, and the schemes are flexible and diverse.
6. CT, PT, protection and communication devices can be installed at the high-voltage side, and multi-functional intelligent instruments for acquisition and protection can be installed at the low-voltage side, so as to realize the "three remotes" of high-voltage and low-voltage switches and transformers.
7. LED display screen can be installed on the surface of the shell to scroll all kinds of information, which is beautiful, environmentally friendly and economical.
8. It can realize fully intelligent data acquisition and analysis, realize active operation and maintenance, and provide energy management for various scenarios.

Scope of Application

It is widely used in various power transformation and distribution places such as industrial parks, residential quarters, commercial centers and high-rise buildings.

YB series Prefabricated Substation



Product Introduction

1. YB series prefabricated substation is a complete set of indoor and outdoor power transformation and distribution equipment composed of high-voltage switchgear, power transformer and low-voltage switchgear.
2. The product is a frame structure, which is welded with section steel or assembled from steel plate.The frame is covered with special paint layer, which has strong mechanical properties, weather resistance and corrosion resistance.
3. The top of the prefabricated substation is provided with a thermal insulation layer to prevent condensation caused by rapid temperature change. A thermal insulation layer can be added around the box.
4. YB series prefabricated substation is to install the secondary system (including telecontrol) of the substation into one or several movable, fully enclosed, moisture-proof and anti-corrosion boxes after installation and commissioning in the factory. After one-time installation in the factory, the box is transported to the site. Only the corresponding foundation and one-time connection are needed to transmit power.
5. It can realize fully intelligent data acquisition and analysis, realize active operation and maintenance, and provide energy management for various scenarios.
6. CT, PT, protection and communication devices can be installed at the high-voltage side, and multi-functional intelligent instruments for acquisition and protection can be installed at the low-voltage side, so as to realize the "three remotes" of high-voltage and low-voltage switches and transformers

Scope of Application

In places without fire, explosion, chemical corrosion and violent vibration, the ground inclination shall not exceed 5°.

Prefabricated Containerized Intelligent Substation



Product Introduction

The containerized enclosure features standardized design,factory-customized distribution, on-site modular construction, and the use of modular and combinable electrical equipment. It includes transformers, high-voltage switchgear and control equipment, internal wiring of low-voltage switchgear and control equipment, metering, compensation,surge arresters, and other auxiliary devices, configured within a common enclosure or a group of enclosures. There are multiple options for the enclosure, allowing for non-metallic or containerized selection based on specific needs. The equipment, following relevant standards, undergoes debugging and testing to form a complete substation.

Product Features

1. Factory production
2. Modular transportation
3. Convenient on-site installation
4. Small footprint
5. Short construction period
6. Low operation and maintenance costs
7. Fully enclosed, long service life, strong weather resistance
8. C3,C4 protection grade

Energy Storage Step-up Substation integrated with Converter (Dry Type Transformer)



Product Introduction

1. Turn-key Solution

a.Integrated photovoltaic inverter, transformer, and switchgear in one unit, factory-tested as a whole, saving installation and commissioning time on-site.

b. The enclosure adopts a container design, eliminating the need for special lifting equipment, making transportation and installation convenient.

2. Strong Environmental Adaptability

a. Strong corrosion resistance: The enclosure is containerized and made of high-weathering steel plate. High-weathering steel has stronger corrosion resistance than ordinary carbon steel.

b. Thermal insulation: Insulation boards are installed inside the enclosure, providing good fire resistance, insulation, and thermal insulation.

c. Ventilation and heat dissipation: The air inlet is specially designed to effectively prevent dust and sand.

3. High Reliability and Safety

a. Adoption of epoxy resin cast dry type transformer, which is a flame-retardant product, eliminating the risk of explosion and fire.

b. The dry type transformer has passed the C2E2 and F1 tests conducted by the National Transformer Quality Supervision and Inspection Center.

4. Low Investment, High Returns

Compared to the conventional 'inverter room + PV transformer cabinet' solution, the investment is reduced by 15% to 20%. The numbers of installation foundation are reduced from 2 to 1. Installation and commissioning time is reduced by 50%. Inverter and transformer are connected using copper busbars, eliminating the need for cables between the inverter room and PV transformer cabinet. Structural optimization saves two low-voltage switchgear cabinets between the inverter and transformer.

5. The product solution is flexible and diverse, completely tailored to meet the customer's actual needs, providing a satisfactory one-stop solution.

Energy Storage step up substation intergrated with Converter (Oil-immersed Type Transformer)



Product Introduction

The energy storage boosting and conversion integrated machine has a high-voltage side voltage ranging from 6kV to 35kV, and the low-voltage side AC voltage of the transformer covers 0.315kV to 0.69kV. The transformer includes various models of oil-immersed, dry type, and Huabian (China) transformers. The energy efficiency grade meets the design requirements, and the maximum DC voltage on the direct current side can reach up to 1500VDC. The standalone capacity of the Energy Storage substation can reach up to 6.8MW.

The energy storage system can be connected to the grid as an independent system, playing a role in peak shaving, valley filling, and reactive power compensation. The energy storage system can also be combined with new energy generation to form a wind-solar energy storage system,smoothing the power output from renewable sources to the grid. Moreover, the energy storage system can be integrated with wind power, solar power, and other renewable energy systems, forming a microgrid system at the load center, which improves energy utilization efficiency, enhances power quality, increases power supply reliability, and promotes green and environmental-friendly practices. By optimizing the configuration of batteries, inverters, bidirectional converters, wind and solar equipment, we can provide engineering consulting, design, system integration, and station-level monitoring for energy storage systems, wind-solar energy storage systems, and energy storage microgrid systems.

KBSG2-T Mining Explosion-proof Transformer
KBSGZY2-T Mining Explosion-proof Mobile Substation



Product Introduction

1. The unique full corrugated structure effectively improves the heat dissipation area, and has a national patent.
2. The cylindrical explosion-proof shell improves the strength of the shell, can withstand 1MPa pressure and has strong explosion-proof performance.
3. DuPont Nomex® Paper insulation system is adopted, which is more safe and reliable.
4. Adopting advanced design and processing technology, complete production and testing technology leading to more stable performance;
5. Low loss, low partial discharge, low noise and strong overload capacity.
6. Maintenance free, safe, flame-retardant, explosion-proof and fire-proof, pollution-free, and can be installed directly.

Scope of Application

It is widely used in power supply of underground devices in coal mines.

KBZSGZY Mining Explosion-proof Converter Mobile Substation



Product Introduction

1. The iron core adopts high-quality high magnetic conductivity silicon steel, full oblique joint and multi-stage stepping process, with low no-load loss.
2. The iron core adopts three-dimensional fastening structure. Under various working conditions, the iron core has no lateral and longitudinal displacement.
3. High and low voltage windings adopt a combined winding process, combined with VPI vacuum pressure impregnation and high-temperature curing, with high mechanical strength.
4. The shell adopts an oval structure, with low product height and short length, which is suitable for the space requirements of various mines.
5. The shell adopts the corrugated cylindrical structure of patented technology, with no ponding and dust on the top, good heat dissipation effect and strong explosion-proof performance.
6. It adopts the eight-point fastening method, which is firm and reliable and can go down the well vertically.
7. Nomex® paper insulation system is adopted, with thermal insulation up to Class C, recyclable, safe and environmental protection.
8. The integrated design scheme supplies power to the Flameproof Frequency Converter and communicates with the frequency converter to complete the functions of equipment operation status monitoring, fault breaking and centralized control.

Scope of Application

The product supplies power to the explosion-proof Frequency Converter and communicates with the frequency converter to complete the functions of equipment operation status monitoring, fault breaking and centralized control. It is widely used in coal mines to supply power to 1140V and 3300V explosion-proof Frequency conversion speed regulating devices with three-level technology.

DFW-12/630 Touchable cable branch box (European style)



Product Introduction

1. Silicon rubber prefabricated connector structure, full insulation, full seal;
2. With functions of proofing the dust, wetness, water and corrosion, it is suitable for indoor and outdoor various environment;
3. Strong extendability.the inlet and outlet wires from 2 circuits to 8 circuits can be combined flexibly to meet various requirements for connection;
4. Maintenance free, small volume, compact structure, convenient installation, nice appearance;
5. Unique Stress cone structure, integrated with silicon rubber structure can control the stress of electric field at the cutting of cable external shield.
6. The product has two selections: non-touchable CJB and touchable CJK.

Technical Parameters

Rated voltage (kV)	operating voltage Long-term maximum (kV)	Rated current (A)	Rated dynamic stability current (peak) (kA)	Rated frequency (Hz)	Rated thermal stable current (kA)	Power frequency withstand voltage (kA)	Lightning impact voltage(kV)
10	15	630	50	20/25	50	45	150

Contact resistance	Working temperature of conductor	Partial discharge	Dampness test kV/h	Applicable cable type	Applicable cable sectional area	Applicable environment temperature	Applicable altitude (m)
≤40℃	≤90℃	≤10PC/13kV	11kV/100	XLPE	25~400mm2	-40℃~+50℃	≤3000m

DFW-12/630 Common scheme No.

Scheme number	01	02	03	04	05	06
Wiring schemes						
Scheme number	**07**	**08**	**09**	**10**	**11**	
Wiring schemes						

DFW-12/630 Touchable cable branch box



● High voltage charged display

Installation Dimension(mm)

