WAYTON
ENERGY TECH CO., LTD

Everything about profitability and charging experience

SEC 80kW Series
DC Fast Charger



Overview

The SEC 80kW is an integrated DC fast charger that features high efficiency and flexible configured. It supports the multiple connector charging at the same time and adopts compact design, with a smaller area covered.
The Charger used in centralized fast charging station, it adopts 20kW charging power module of Sinexcel, and meet the charging demand of larger capacity and high endurance electric on the market.

Dimensions

W850*D500*H2030mm

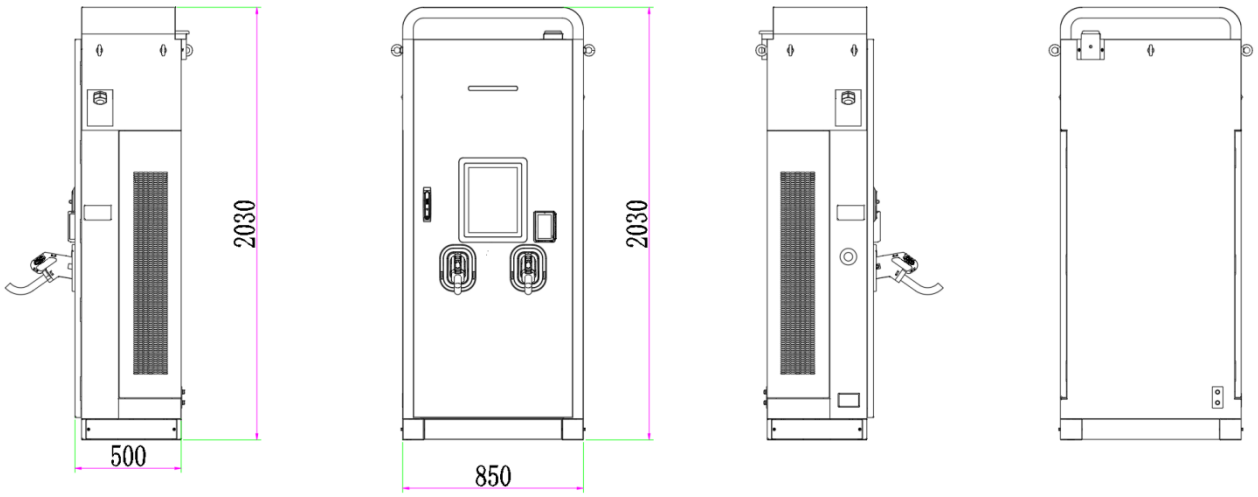

Specifications

80kW Integrated Charger		
Input Characteristic	Input voltage	400 VAC +/- 10%
	Input frequency	50 Hz/ 60 Hz
	Input type	3P + N + PE
	Max input current	150A
	Max input power	89kVA
	Power factor	0.99
	THDi	<5%
	Grounding type	TN-S, TT
Output Characteristic	Connector options	CCS2 CCS2+CCS2 CCS2+CHA
	Output voltage	CCS2: 200-1000 Vdc CHAdeMO: 200-500 Vdc 300~1000V is the output voltage of constant power output.
	Maximum output current	CCS2: 200A CHAdeMO: 125A
	Rated power	DC: 80kW
	Peak efficiency	96%
Environment	Operational altitude	<2000 m
	Operating temperature	-25 °C to +65 °C
	Temperature derating	Up to 50 °C, 100% output power; 50-65 °C interval, linear power limit; 65 °C or more, module shutdown protection
	Storage temperature range	-30 °C to +70 °C
	Humidity	5 %-95 % Rh non-condensing
Structure	IP and IK rating	IP55/ IK10
	Dimensions	W850*D500*H2030mm
	Weight	≤350 kg
	Enclosure material	Stainless steel
Components	Cable length	5 m (total, outside charger 4.5m)
	Screen	15" HD high-contrast touchscreen
	RFID Reader	ISO 14443 A + B to part 4 and ISO/IEC 15693, Mifare1, NFC
	Emergency button	Yes
	Communication interface	4G / LAN Port
	Language	English (Support customizing other languages)
	Communication protocol	OCPP1.6J
	Cooling method	Air cooled
	Payment method	RFID / APP (Mobile phone / Visa / Master is optional)

Others	EMC	Class A (industrial)
	Protection	Undervoltage protection, Overvoltage protection, DC Overcurrent protection, Over-temperature protection, Surge Protection Device, Emergency Stop Protection
	Barrier design	Yes
	Optional functions	Cable management, tilt detection, flood detection, smoke detection
Standards and Certifications	Standards	IEC 61851, IEC 62196, DIN 70121, ISO 15118, etc.
	Certifications	CE, TUV

Shenzhen Sinexcel Electric Co.,Ltd.
https://en.sinexcel.com/

Address: 6th Building, 2nd District, Baiwangxin High-tech Industry Park, Songbai Road, Nanshan District, Shenzhen.

© Sinexcel 2024. All rights reserved.

WAYTON
ENERGY TECH CO., LTD

Everything about profitability and charging experience