WAYTON
ENERGY TECH CO., LTD

SEC100030Y Series

DC Fast Charger

CE certified

Flexible Installation

Overview

The SEC 30kW Series DC Charger features a modular design and exceptional industrial engineering. Its lightweight and portable construction ensures quick installation, convenient charging, and easy maintenance. The SEC 30 is ideal for compact spaces, fully charging EVs within 2-3 hours. Additionally, a mobile solution is available, allowing the charger to be mounted on a trolley for easy mobility and charging on the go.



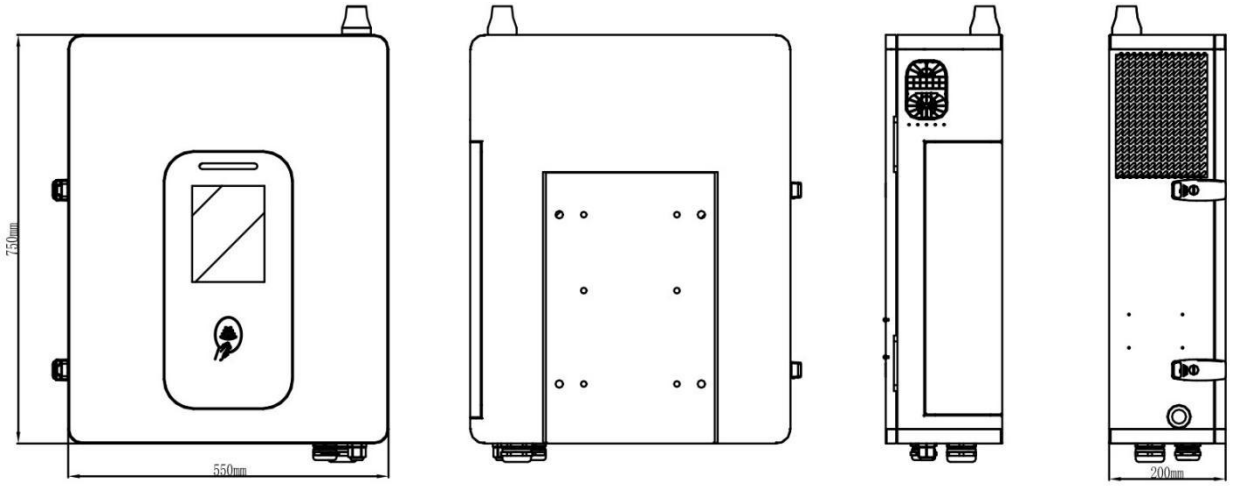

Front view | Rear view | Right side view | Left side view


SINEXCEL

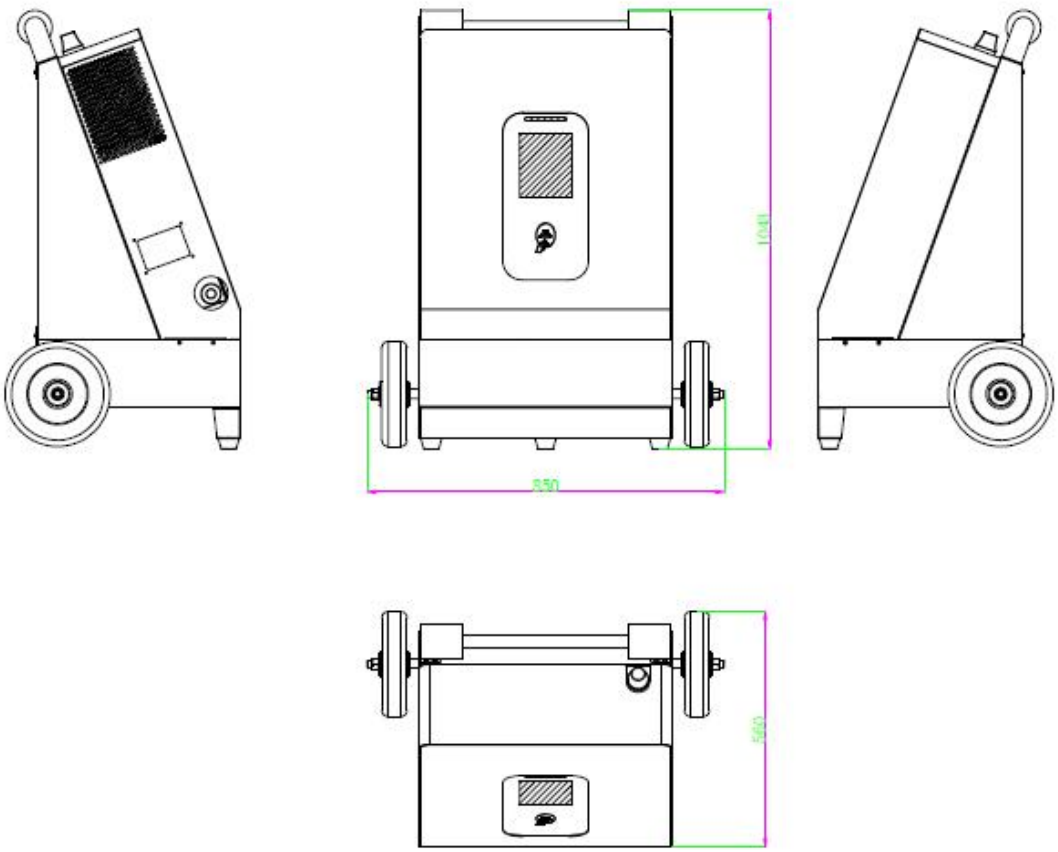

Specifications

30kW DC Charger		
Input Characteristic	Input voltage	380~400 VAC
	Input frequency	50 / 60 Hz
	Input type	3P + N + PE
	Input current	55A
	Input power	33kVA
	Power factor	0.99
	THDi	<5%
Output Characteristic	Connector options	Single connector Standard CCS2, Optional CHAdeMO
	Output voltage	CCS2: 50-1000 Vdc CHAdeMO: 50-500 Vdc 375~1000V is the output voltage of constant power output@80A CCS2 cable.
	Maximum output current	Standard CCS2 80A Optional: CCS2 125A, CHAdeMO 80A
	Rated power	DC: 30kW
	Peak efficiency	96%
Environment	Operational altitude	<2000 m
	Operating temperature	-25 °C to +50 °C (Full power)
	Temperature derating	Up to 50 °C: 100% output power, 50-65 °C interval, linear power limit, 65 °C or more, module shutdown protection.
	Storage temperature range	-30 °C to +70 °C
	Humidity	5 %-95 % Rh non-condensing
Structure Components	IP and IK rating	IP55/ IK10
	Dimensions	W550mm*D700mm*H200mm (EV Charger) W850mm*D1043mm*H560mm (Mobile Ver.)
	Weight	≤65 kg
	Cable length	5m (4.5m exposed from the charger), longer length optional
	Emergency button	Yes
	Installation	Standard Wall mounted Pedestal kit optional Mobile wheel kit optional
Others	Communication interface	4G / LAN Port
	Language	English (Support customizing other languages)
	Communication protocol	OCPP1.6J OCPP2.0.1 upgradable

	Cooling method	Air cooled
	Payment method	RFID / APP
	EMC	Class A (industrial)
	Protection	Undervoltage protection, Overvoltage protection, DC Overcurrent protection, Over-temperature protection, Surge Protection Device, Emergency Stop Protection
Standards and Certifications	Standards	IEC 61851, IEC 62196, DIN 70121, ISO 15118, etc.
	Certifications	CE, TUV, UKCA, *RCM

Shenzhen Sinexcel Electric Co.,Ltd.
https://en.sinexcel.com/

Address: 6th Building, 2nd District, Baiwangxin High-tech Industry Park, Songbai Road, Nanshan District, Shenzhen.

© Sinexcel 2025. All rights reserved.