USER MANUAL

All-In-One Three-Phase HV ESS

MODEL: Venus HVT Series
Hybrid Inverter
MODEL: Venus HV5-01
Lithium-ion Battery



Contents

01	**Safety**	**02**
1.1	Safety instructions	02
1.2	Symbols in this document	02
1.3	Qualified personnel	02
1.4	Equipment requirements	03
1.5	Electrical requirements	03
1.6	Installation requirements	03
1.7	Environment requirements	03
02	**Product introduction**	**04**
2.1	Dimension and weight	05
2.1.1	Inverter Dimension and weight	05
2.1.2	Battery Dimension and weight	05
2.2.	Appearance	06
2.2.1	Inverter electrical interface introduction	06
2.2.2	Inverter display interface introduction	07
2.2.3	Battery introduction	13
2.3	Specifications	16
2.3.1	Inverter specifications	16
2.3.2	Battery system specifications	18
2.4	Application scenarios	19
2.5	Labels	21
03	**Installation instructions**	**22**
3.1	Scope of delivery for inverter installation	22
3.2	Necessary Materials for Installation	23
3.3	Scope of delivery for battery installation	24
3.4	Tools & Instruments prepared (not supplied)	25
3.5	Installation location and clearance	26
3.6	Equipment installation	28
3.6.1	Battery installation	28
3.6.2	Inverter installation	32
04	**Cable connection**	**33**
4.1	Connecting additional grounding	33
4.2	Requirements for the AC connection	34
4.3	Grid and backup connection	35
4.4	Electricity meter connection	36
4.5	Configuring the CHINT meter	39
4.6	PV connection	39
4.7	Electrical connection between the inverter and battery packs	40
4.7.1	Installing grounding cables	40
4.7.2	Installing DC power cables	41
4.7.3	Installing signal cables	41
4.8	AUX/LAN/DRM&RRCR/Meter/RS485 /BMS connection	42
05	**Commissioning**	**44**
5.1	Install the tamper-proof plate	44
5.2	Mount the cover	44
5.3	Mount the inverter with wall bracket (optional)	46
5.4	Mount the Wi-Fi module	48
5.5	Inspection before power on	48
5.6	System power on	48
5.7	System power off	48
5.8	Battery LED indicator	48
06	**System maintenance**	**50**
6.1	Routine maintenance	50
6.2	Troubleshooting	51
6.2.1	Inverter error troubleshooting	51
6.2.2	Battery error troubleshooting	55
07	**UNINSTALLATION & RETURN**	**56**
7.1	Removing the product	56
7.2	2 Packing the product	56
7.3	Disposing of the product	56
08	**What to do in case of an emergency**	**57**
8.1	In case of fire	57
8.2	In case of flooding	57
8.3	In case of unusual noises	57
8.4	In case of unusual smell or smoke	57

Appendix 1: System overview
Appendix 2: Regional application standard

All information in this manual is subject to copyright and other intellectual property rights of CESC New Energy Technology Co., Ltd. This manual should not be modified, reproduced or copied, in whole or in part. The unauthorized use without prior written permission is strictly prohibited. CESC New Energy Technology Co., Ltd. All rights reserved.

Please read this entire document carefully before installing or using the battery system. Failure to do so or to follow any of the instructions or warnings in this document can result in electrical shock, serious injury or death, can damage battery, potentially rendering it inoperable. Warranty claims are invalid, if damage is caused by human error in a manner inconsistent with the installation manual's instructions.

The information included in this manual is verified by CESC to be accurate at the time of publication. However, due to the continuous improvement of products, this manual is subject to change without prior notice.Unless otherwise specified, this manual is for operational guidance only, and all statements contained herein do not constitute any form of warranty.

The illustrations in this manual are intended to help explain operating system configurations and installation instructions. Any confusion, please contact CESC immediately for advice and clarification. Thank you for your choice and trust.

01 Safety

1.1 Safety instructions

For safety reasons, please read this entire manual before installing, servicing or using. Failure to comply with the instructions can result in electrical shock, serious injury, death or can damage the battery, potentially rendering it inoperable.

⚠ CAUTION

Proper disposal of batteries is required. Please refer to your local regulations for disposal requirements.

1.2 Symbols in this document

This manual uses the following symbols to highlight essential information:

	WARNING
	CAUTION
	RISK OF ELECTRIC SHOCK
	REFER TO OPERATING INSTRUCTIONS
	DO NOT THROW AWAY
	RECYCLABLE
	HEAVY WEIGHT MAY CAUSE SERIOUS INJURIES
	GROUND (EARTH) CONNECTION
	RISK OF ELECTRIC SHOCK ENERGY STORAGE DISCHARGE TIME

1.3 Qualified personnel

Battery Management System (BMS) installation and maintenance must be carried out only by certified installers who possess all following qualifications and experience:

- Knowledge of the installation of electrical devices.
- Knowledge of the functional principles and operation of on-grid and off-grid systems.
- Knowledge of the dangers and risks associated with installing and using electrical devices and acceptable mitigation methods.
- Knowledge of and adherence to this manual and all safety precautions and best practices.
- Knowledge of the protective measures to minimize hazards to themselves and others.

1.4 Equipment requirements

If the battery module seems to be damaged, pack it in its original container, and then return it to your distributor.

- Do not damage the battery module.
- Do not use water to clean electrical components inside or outside of the battery module.
- Do not stand on, lean on, or sit on the top of the battery module.
- Promptly repaint any scratches that occur during the transportation or installation of the battery module.
- Exposing a scratched battery module to the outdoors for extended periods is not advisable.

1.5 Electrical requirements

- Ensure that the power setting matches the rated input of this power supply.
- Make sure to connect the protective grounding to prevent an electric shock before activating the power.
- Never sever the internal or external protective grounding wire, or disconnect the wiring of protective grounding terminal. Such actions can create a shock hazard, potentially causing injury.
- Do not connect the battery module directly to photo-voltaic (PV) solar wiring.
- Do not short-circuit the wiring terminals of the battery module. Short circuits can cause a fire hazard.

⚠ DANGER

Before connecting cables, ensure that the equipment is intact. Otherwise, electric shocks or fire hazards may occur.

1.6 Installation requirements

- Understand the components and functioning of a grid-tied PV power system and relevant local standards.
- Do not install, use, or operate outdoor equipment and cables in harsh weather conditions such as lightning, rain, snow, and level 6 or stronger wind.
- Wear proper personal protective equipment (PPE) during operation. If there is a probability of personal injury or equipment damage, immediately stop the operations, report the case to the supervisor, and take feasible protective measures.
- Tighten screws using tools when installing the battery module.
- To prevent fire due to high temperature, ensure that the ventilation vents of the heat dissipation system are not blocked when the battery is running.
- After installing the battery module, remove idle packing materials such as cartons, foam, plastics and cable ties from the equipment area.

⚠ DANGER

Do not work with live electricity during installation and equipment operation.

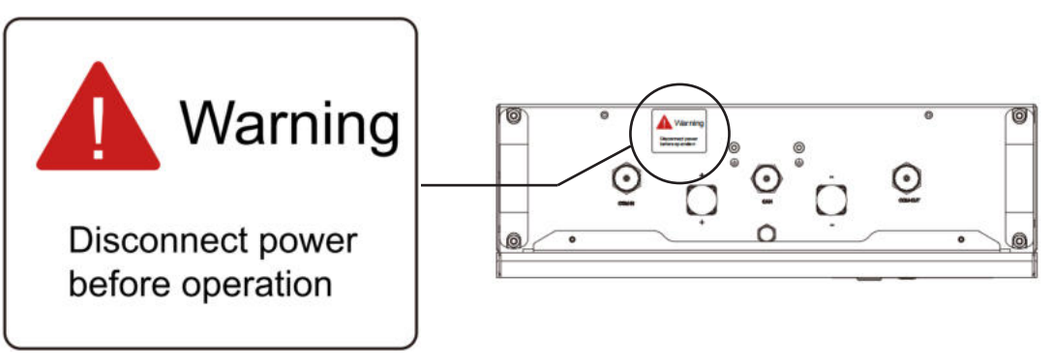

Example Product: Saturn LV5-02 (Top View)

1.7 Environment requirements

Operating Temperature	0°C to 50°C (32°F to 122°F)
Humidity	≤ 95%
Storage < =6 months	Stage of Energy (SOE): 50% initial
Maximum Altitude	Max. 3000m (9842 ft)

- Install the battery module in a dry and well-ventilated environment to ensure good heat dissipation.
- Install the battery module in a sheltered place or install an awning over it.
- Install the battery module at a height that prevents damage from flooding.
- Avoid exposing the battery module to direct sunlight or water.
- Do not install the battery module near heating equipment.
- Do not place any flammable or explosive materials around the battery module.
- Do not subject the battery module to high pressures.
- Do not place any objects on top of the battery module.
- Do not expose the battery module to ambient temperatures above 60°C (140°F) or below -30°C (-22°F).
- Children are not allowed to enter the installation position.
- Operating or storing the battery module in temperatures outside its specified range might cause damage to the battery module.
- Ensure that there is minimal dust and dirt in the area.
- Ensure that no water sources are above or near the battery module, including downspouts, sprinklers, or faucets.
- The battery module site must be equipped with qualified fire extinguishing facilities, such as fire extinguishing sands and powder fire extinguishers.

⚠ CAUTION

The recommended operating temperature ranges from 15°C to 30°C.

02 Product introduction

Overview

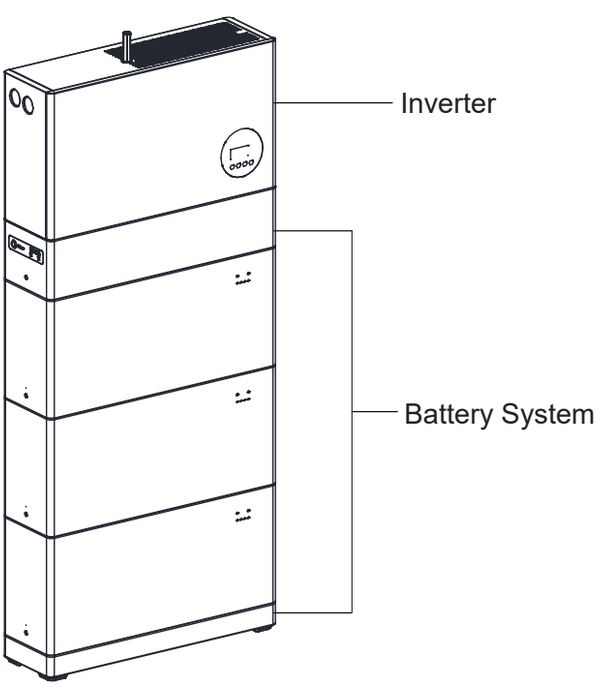

4

2.1 Dimension and weight

2.1.1 Inverter Dimension and weight

Inverter **W*D*H:** 740*220*416mm
Weight: 31KG

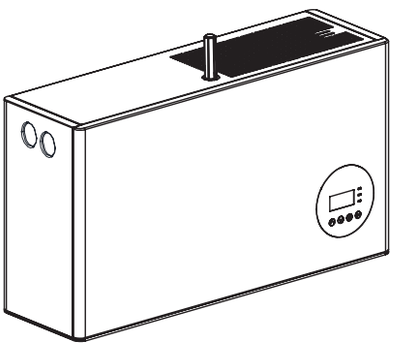

2.1.2 Battery Dimensions and weight

- Battery control unit (BCU) is an electronic system to control battery modules.
- Battery Module is the residential battery which can be charged and discharged into a load.
- The Base is an SPCC bottom support to make the battery module and BCU stable on the floor.
- The Battery System includes the BCU, Battery Modules, and the Base.

BCU **W*D*H:** 740*220*170mm
Weight: 11KG

Base **W*D*H:** 740*220*60mm
Weight: 5KG

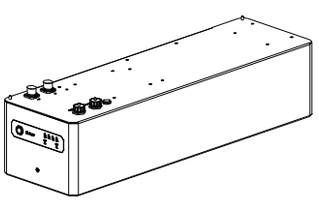

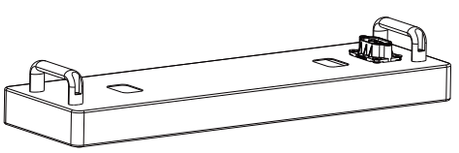

Battery Module **W*D*H:** 740*220*335mm
Weight: 50KG

Battery System **W*D*H:** 740*220*1235mm
Weight: 166KG

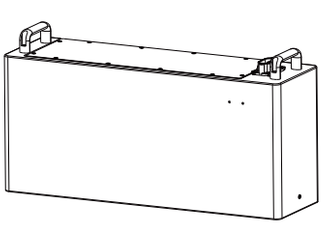

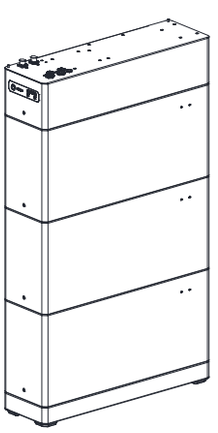

2.2 Appearance

2.2.1 Inverter electrical interface introduction

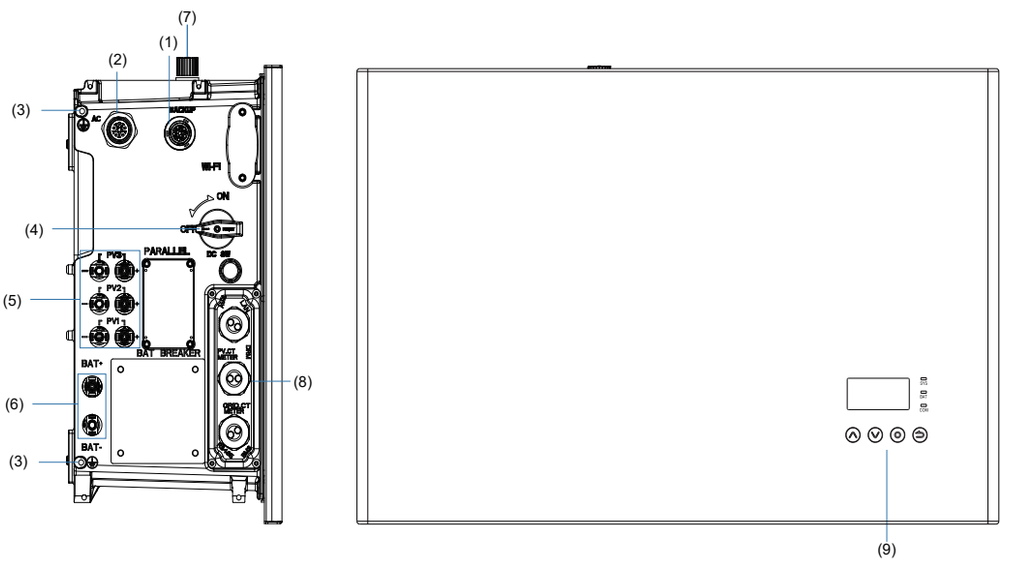

Position	Designation
1	Backup Connector
2	Grid Connector
3	Grounding Point
4	PV Switch
5	PV Connectors
6	BAT Connectors
7	Wi-Fi Port
8	Communication Ports(CAN/RS485,BMS, LAN, METER, DRM**, AUX)
9	LCD Display

*All breakers of the product are switched off when shipped.
**The DRM is only for regions with AS/NZS 4777.2 safety regulations.

2.2.2 Inverter display interface introduction

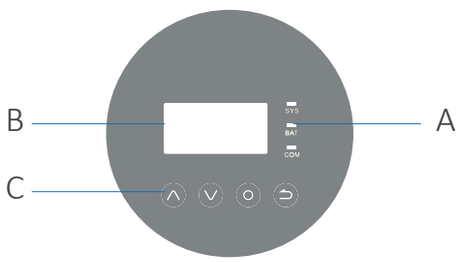

Object	Name	Description	
A	SYS LED	Red: The inverter is in fault.	
		White: The inverter is in normal state.	
	BAT LED	White: The battery is in charging or discharging.	
	COM LED	White: The inverter is in communication.	
B	LCD Dispaly	Display the information of the energy storage system.	
C	Button Function		Escape from current interface or function.
			Move cursor to upside or increase value.
			Move cursor to downside or decrease value.
			Confirm the selection.

With software updates, there may be slight differences in screen settings. If there are any issues, please contact the installer or after-sales service.

2.2.2.1 Main interface of the inverter LCD

Power 0W Total 00.0kWh Battery % Normal	Main displays the inverter working status and information, including: 1.Power: Current PV power. 2. Total: Total power generation. 3.Battery: Current remaining battery power (SOC). 4. Normal: Current working state of the equipment, including Standby
>>>> MENU <<<< >Status History Setting	In the Main interface, press ENT key to enter the menu's main interface. Use the up and down key to select a sub-menu, press the ENT key to enter the selected sub-menu, press Return key to return to the previous layer.

2.2.2.2 Display content of sub-menu status item

>>>> Status <<<< >Grid Soalr Battery	Status menu contains five sub-menus: Solar, Battery, Grid, UIPS and Comm. These display the relevant information about the current physical or communication interface respectively.
>>>> Grid <<<< >U1 230.2V I1 2.0A P1 0W	Grid interface displays the real-time information on the utility grid side: voltage U1, current I1, frequency Solar Power P1, PInv,PMeter AC, PMeter DC .
>>>> Grid <<<< >U2 230.2V I2 2.0A P2 0W	Grid interface displays the real-time information on the utility grid side: voltage U2, current I2, frequency Solar Power P2,PInv,PMeter AC,PMeter DC
>>>> Grid <<<< >U3 230.2V I3 2.0A P3 0W	Grid interface displays the real-time information on the utility grid side: voltage U3, current I3, frequency y Solar Power P3, PInv, PMeter AC, PMeter DC.
>>>> Solar <<<< >U1 360.0V I1 1.0A P1 360W	Solar interface displays the real-time information of PV side: voltage U1, current I1, power P1.
>>>> Solar <<<< >U2 360.0V I2 1.0A P2 360W	Solar interface displays the real-time information of PV side: voltage U2, current I2 and power P2.
>>>> Solar <<<< >U3 360.0V I3 1.0A P3 360W	Solar interface displays the real-time information of PV side: voltage U3, current I3 and power P3.

>>>> Battery <<<< >U 96.0V I 10.0A P 960W	Battery interface displays the real-time information of battery side: voltage U, current I, power P, residual capacity of Battery (SOC), the internal environmental temperature Temp.
>>>> UPS <<<< >U1 230.2V I1 2.0A S1 0VA	UPS interface displays the real-time information in this mode: voltage U1, current I1, ,Apparent Power S1.
>>>> UPS <<<< >U2 230.2V I2 2.0A S2 0VA	UPS interface displays the real-time information in this mode: voltage U2, current I2, ,Apparent Power S2.
>>>> UPS <<<< >U3 230.2V I3 2.0A S3 0VA	UPS interface displays the real-time information in this mode: voltage U3, current I3, ,Apparent Power S3.

2.2.2.3 Display content of sub-menu history item

>>>> History <<<< >Grid Consump INV Gen. BAT Gen.	History menu contains seven sub-menus: Grid Consumption, INV Gen., BAT Gen., PV Gen., Grid Charge, PV Charge., Error Logs.
> Grid CONSUMP < > Total: 0.0kWh	Grid Consumption interface displays today's or total load consumption from grid.
>>> INV Gen. <<< >Today: 29.1kWh	INV Gen. interface displays today's or total electricity quantity generated from Inverter.
>>> Bat Gen. <<< >Today: 13.8kWh	Bat Gen. interface displays today's or total electricity quantity discharged from the battery.
>>> PV Gen. <<< >Today: 19.0kWh	PV Gen. interface displays today's or total electricity quantity generated from the PV-panels.

>>> Grid Charge <<< >Today: 1.9kWh	Grid Charge interface displays today's or total electricity quantity battery charging from the grid.
>>> PV Charge <<< >Today: 13.1kWh	PV Charge interface displays today's or total electricity quantity battery charging from the PV-panels.
>>> Error Logs <<< 1: 2018-02-02 16:48 Chg SPI Fault	Error Logs interface displays the 10 latest fault records of this device, including the name of the fault and time of error.
>> Information < >SN: xxxxxxxxxxxxx	Series Number，the only identify number of the inverter.
>> Information < >Inverter Ver.:	Check the inverter software version.

2.2.2.4 Display content of general setting item

> New Password < > 0 0 0 0	Step1: Click setting and enter the password. The installation's password is a four-digits password: 1111, after four-digits password was correctly input, you can enter into the main Setting interface (administrator permissions).	
>>> Setting <<< >Function Safety	>>> Function <<< >Solar Battery Grid	>>> Solar <<< >On Grid Cap. 000000W
Step2: Click Function to enter function setting.	Step3: Click Solar to set the Solar relevant information.	Step4: Set on-grid capacity, storage capacity and number of PV strings (MPPT number).

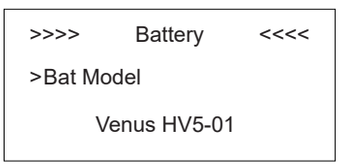

Step5: Click the Battery Function and check battery type.

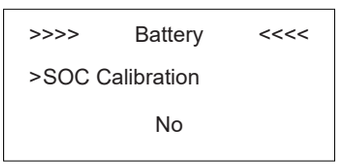

Step6: Check SOC Calibration function set No.

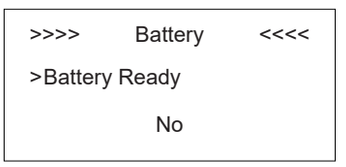

Step7: Check the Battery Ready function set No. If you only use the inverter without battery, please set it Yes.

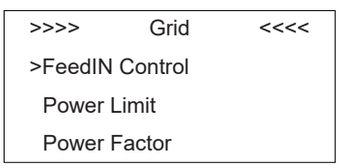

Step8: Click the Grid Function to set up relevant parameters of the grid.

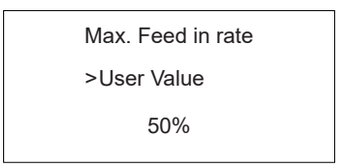

Step9: Set the Max. Feed in rate value.

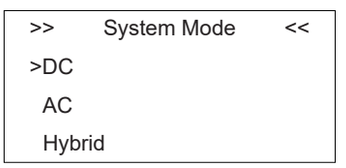

Step10: Click Function-System Mode to set system mode: DC, AC, Hybrid.

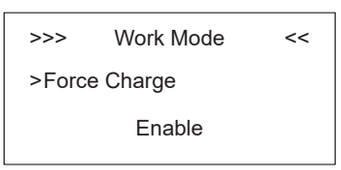

Step11: Click the mode then set up work mode.(self-use or force time charge)

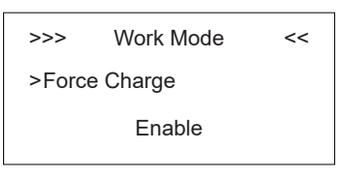

Step12: If you want to use force charge, sett Enable here.

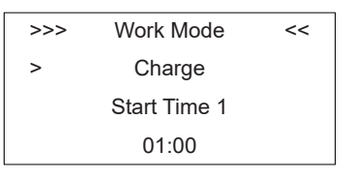

Step13: Set the charge and discharge time.



Step14: Click Safety in the setting menu. Set safety standard.For example: AS4777 for Australia, VDE4105 for Germany, CEI0_21 for Italy, G83_2 for Great Britain, NRS097_2_1 for South Africa, RD1699 for Spain, VDE0216 for 60Hz countries.

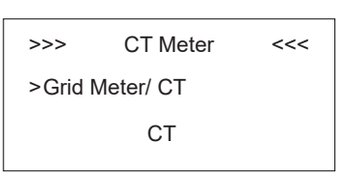

Step15: If you use CT meter, please set CT meter enable and the relevant ratio.

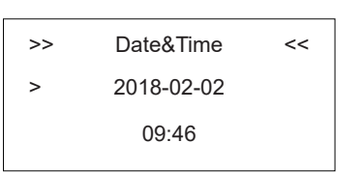

Step16: Click System in the setting menu. Click Date &Time and set up the date and time.

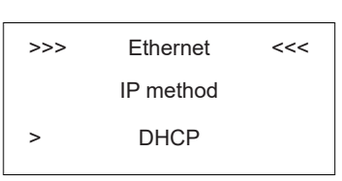

Step17: Click Ethernet to set the IP address.
DHCP mode means that setup IP address is set up automatically.
If you want to set up the IP address manually, please choose manual mode.

Note:
It is needed to set the following 3 parameters for manual mode:
IP Address: IP address;
Subnet Mask: Subnet mask;
Default Gateway: Default gateway;
Automatic display one parameter: MAC Address: display MAC Address.

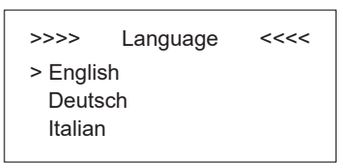

Step18: Click Language to set Language Date & Time Setting Interface.

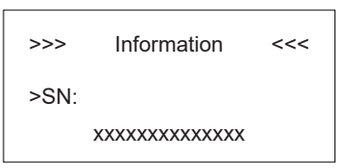

Step 19: Make sure all the following number is correct.
Date & Time Setting Interface.

2.2.2.5 Overloaded state

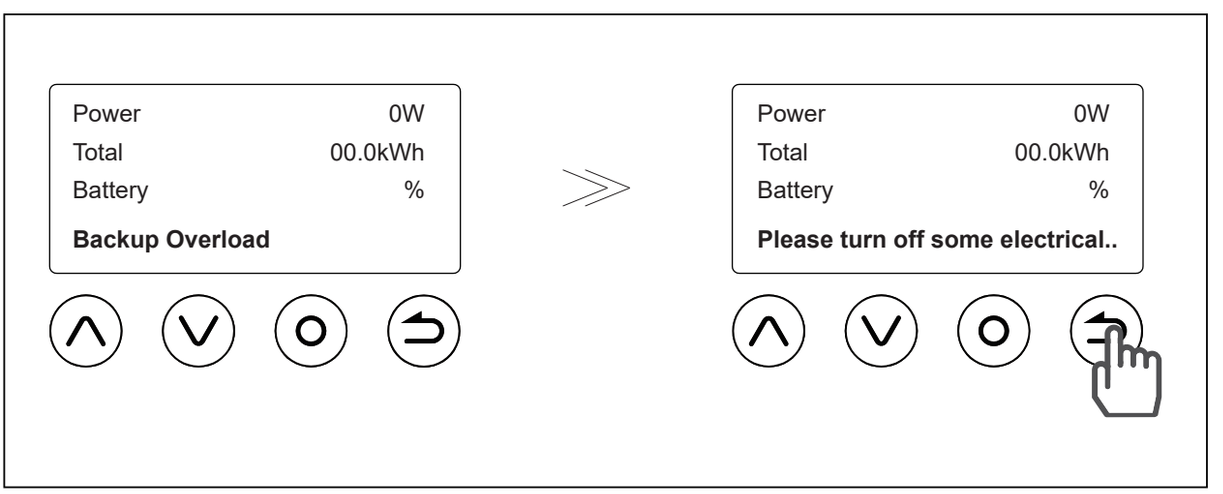

When overloaded, the display show "over load" and scrolls to prompt the customer to reduce some electrical appliances like this "Please turn off some electrical appliances and press the exit button to resume".

2.2.3 Battery introduction

2.2.3.1 Battery system appearance

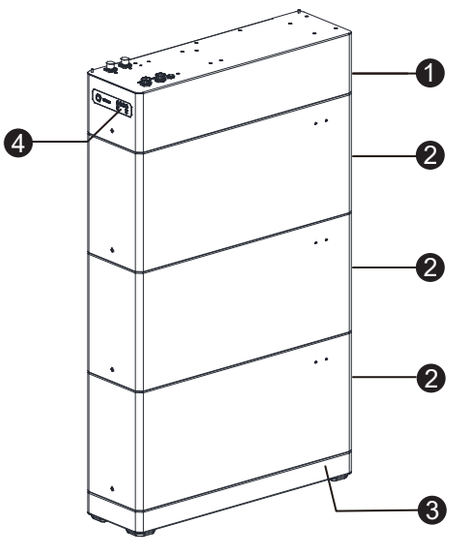

1 BCU

2 Battery Modules

3 Installation Base

4 LED-Indicator

NOTE

The battery system supports power and capacity expansion. 1 BCU supports a maximum of 3 battery expansion modules in series.
This manual will show you the installation and cable connection of a battery system consisting of 3 battery modules.

Venus HVT Series & Venus HV5-01

2.2.3.2 Battery control unit (BCU)

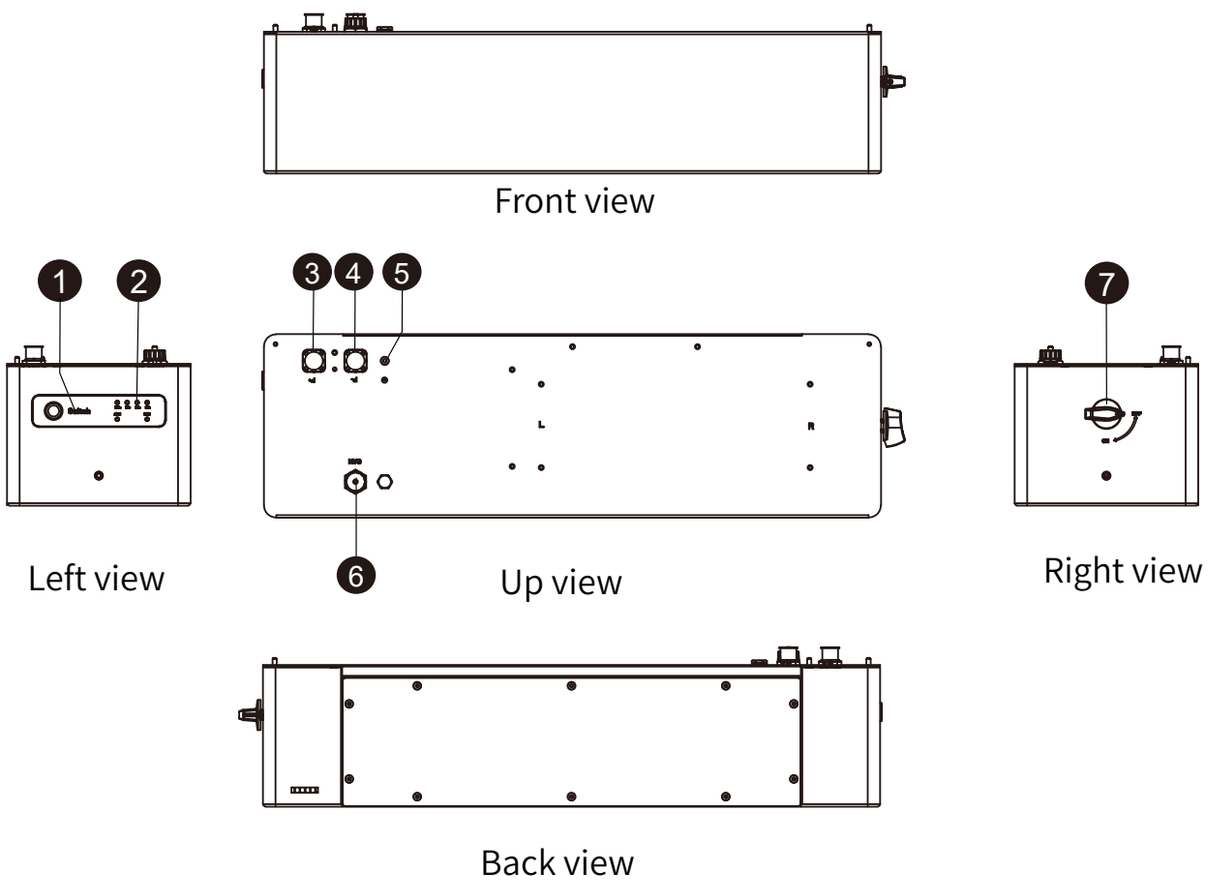

No.	Signs	Function Description
1	SW	Switch on/off the battery system
2	LED	Indicates the battery system status: running green light, warning red light, SOC blue light
3	P+	Power + (BCU to PCS)
4	P-	Power - (BCU to PCS)
5	⏚	Grounding point (BCU to PCS)
6	CAN	CAN COM cable port (BCU to PCS)
7	Isolating switch	Disconnect the battery pack from the load when the voltage or current of the battery pack is abnormal.

2.2.3.3 Battery module

Battery Module Top

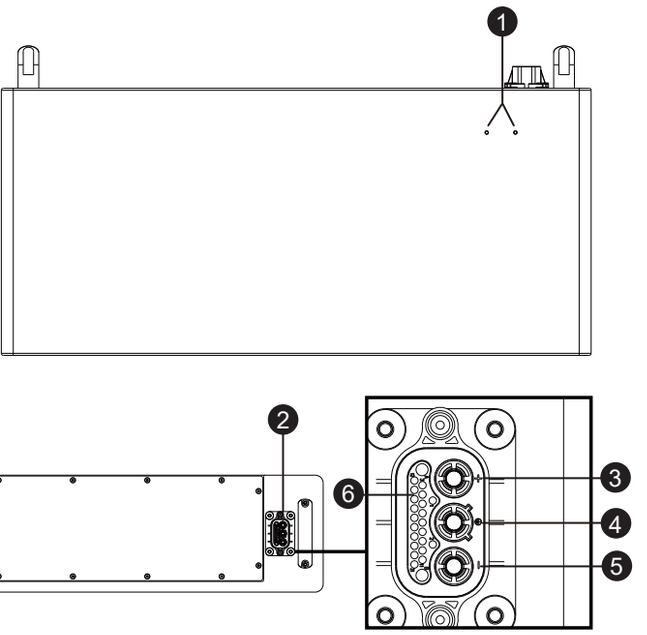

Battery Module Bottom

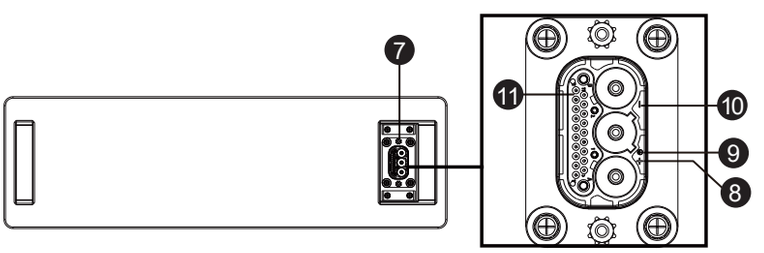

No.	Port Signs	Function Description
1	LED	Indicates the battery system status: running green light, warning red light
2	Composite connector-Female	Power +/- and communication port (BCU to BAT or BAT to BAT)
3	B+	Power + (BCU to BAT, BAT to BAT)
4	⏚	Grounding point (BCU to BAT, BAT to BAT)
5	B-	Power - (BCU to BAT, BAT to BAT)
6	COM-IN	COM cable port (BCU to BAT, BAT to BAT)
7	Composite connector-Male	Power +/- and communication port (BAT to BAT)
8	B+	Power + (BAT to BAT)
9	⏚	Grounding point (BAT to BAT)
10	B-	Power - (BAT to BAT)
11	COM-OUT	COM cable port (BAT to BAT)

2.3 Specifications

2.3.1 Inverter specifications

Item	Venus 4000 HVT	Venus 5000 HVT	Venus 6000 HVT	Venus 8000 HVT	Venus 10000 HVT	Venus 12000 HVT	Venus 15000 HVT
BATTERY PORT							
Battery Type	LiFePO4						
Battery Voltage Range [V]	90-700						
Max. Charging Current [A]	50						
Max. Discharging Current [A]	50						
INPUT PV							
Max. PV Input Power [kW]	8	10	12	16	20	22.5	22.5
Max. PV Input Voltage [V]	1100						
MPPT Range [V]	140-950						
Startup Voltage [V]	120						
Max. Input Current [A]	16 / 16 / 16						
Max. Short Circuit Current [A]	24 / 24 / 24						
MPPT Trackers	3						
Strings Per MPPT Tracker	1 / 1 / 1						
GRID PORT							
Rated Output Power [kVA]	4	5	6	8	10	12	15
Max. Output Current [A]	6.7	8.3	10	13.3	16.7	20.0	22.8
Max. Output Apparent Power [kVA]	4.4	5.5	6.6	8.8	11	13.2	15.75
Max. Input Power [kVA]	8	10	12	16	20	20	20
Rated Grid Voltage [Vac]	220/380, 230/400, 3L/N/PE						
Grid Voltage Range [Vac]	180-270						
Rated Grid Frequency [Hz]	50 / 60						
Adjustable Power Factor[cosφ]	-0.8 leading to 0.8 lagging						
THDi	< 3%						

Venus HVT Series & Venus HV5-01

BACKUP PORT							
Peak Backup Power [kVA]	8	10	12	16	20	20	20
Rated Backup Power [kVA]	4	5	6	8	10	12	15
Rated Backup Voltage [Vac]	220/380, 230/400, 3/N/PE						
Rated Backup Frequency [Hz]	50 / 60						
THDv	< 3%(Linear Load/) / < 5%(Non-linear Load)						
DCV	< 100mV						
Crest Ratio	3:1						
EFFICIENCY							
Max. Efficiency [Hz]	98%	98%	98.2%	98.4%	98.4%	98.4%	98.4%
Europe Efficiency [Hz]	97.5%	97.5%	97.7%	97.9%	97.9%	97.9%	98%
MPPT Efficiency [Hz]	99.9%						
Max. Round Trip Efficiency [Hz]	96.0%						
HMI&COMM.							
Communication With BMS	CAN / RS-485						
Load Monitoring	Meter / CT						
External Communication	RS-485 / WIFI / 4G / Ethernet						
User Interface	LED / LCD						
GENERAL SPECIFICATIONS							
Cycle Life	Inverter: 5 years/10 year						
Ingress protection	IP65						
Operating ambient temperature range[℃]	-25~+60						

2.3.2 Battery system specifications

Venus HV5-01 SYS Configuration List

Model	Venus HV5-01-1	Venus HV5-01-2	Venus HV5-01-3
Total Energy [kWh]	5.3	10.6	15.9
Battery Module	Venus HV5-01 102.4V 5.3kWh		
Number of Battery Modules	1	2	3
Cell Type	LFP ($LiFePO_4$)		
Rated Voltage [V]	102.4	204.8	307.2
Operating Voltage [V]	80-116.8	160-233.6	240-350.4
Max Charge/Discharge Current [A]	50	50	50
Dimension [W/D/H. mm]	740*220*565	740*220*900	740*220*1235
Approximate Weight [KG]	66	116	166

Recommended max. Depth of Discharge	90%
LED Indicator	4 SOC LED (SOC: 25%~SOC 100% blue), 2 Condition LED (working green, alarming red)
IP Rating of Enclosure	IP65 (Outdoor)
Operating Temperature	Charge: 0°C~50°C/Discharge: 0°C~50°C
Storage Temperature	0°C~35°C
Humidity	≤95%
Altitude	≤3000m
Cycle Life	10 + years, ≥6000 cycles (70% EOL ,80% DOD,25 °C)
Installation	Stack, Floor-Mounted
Communication Port	CAN
Certification	UN38.3, IEC62619, IEC63056, IEC62040, IEC62477

The current is affected by temperature and SOC.

2.4 Application scenarios

Storage System can be applied in DC-coupled systems (mostly new installation), AC-coupled systems (mostly retrofit), Hybrid-coupled systems (mostly retrofit, and increase the PV capacity), and Off-grid systems as the following schemes show:

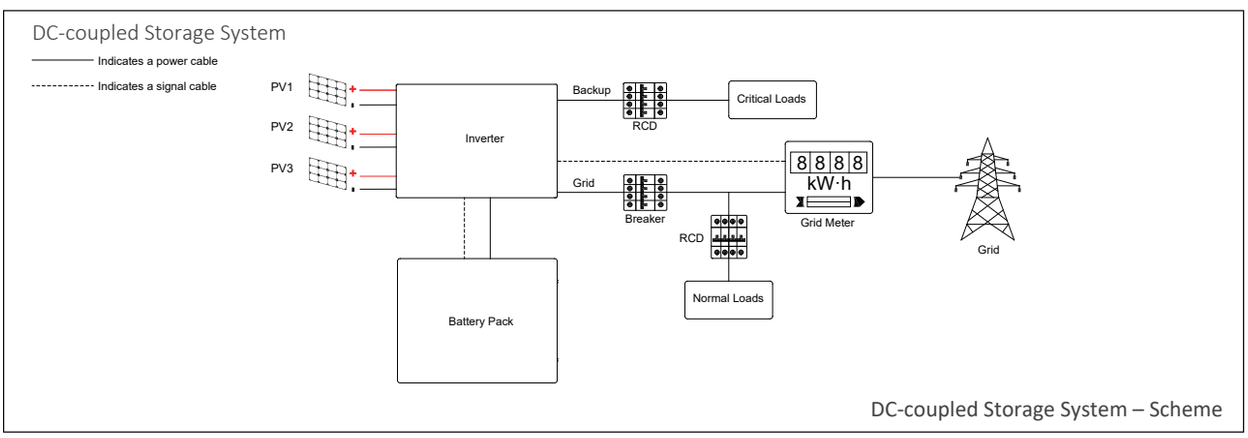

DC-coupled Storage System – Scheme

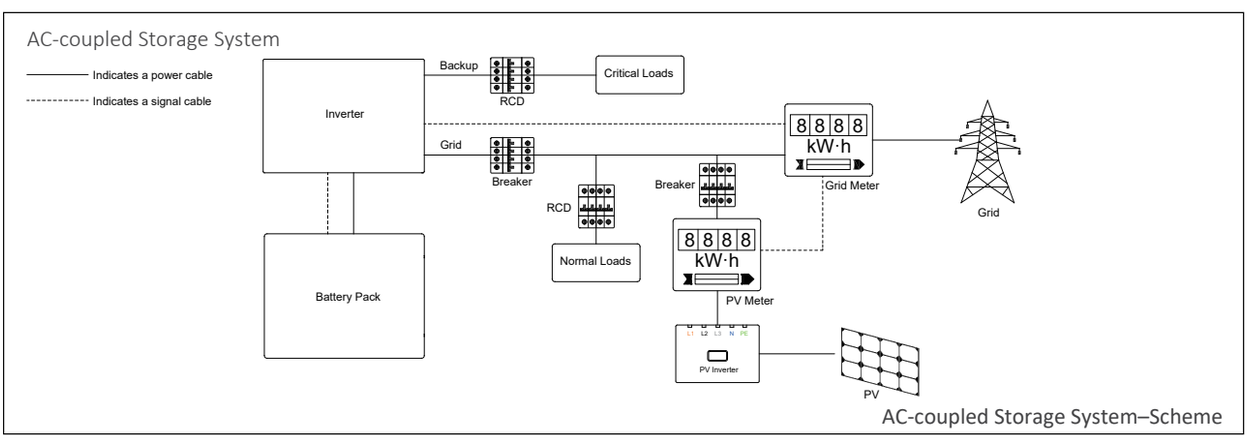

AC-coupled Storage System–Scheme

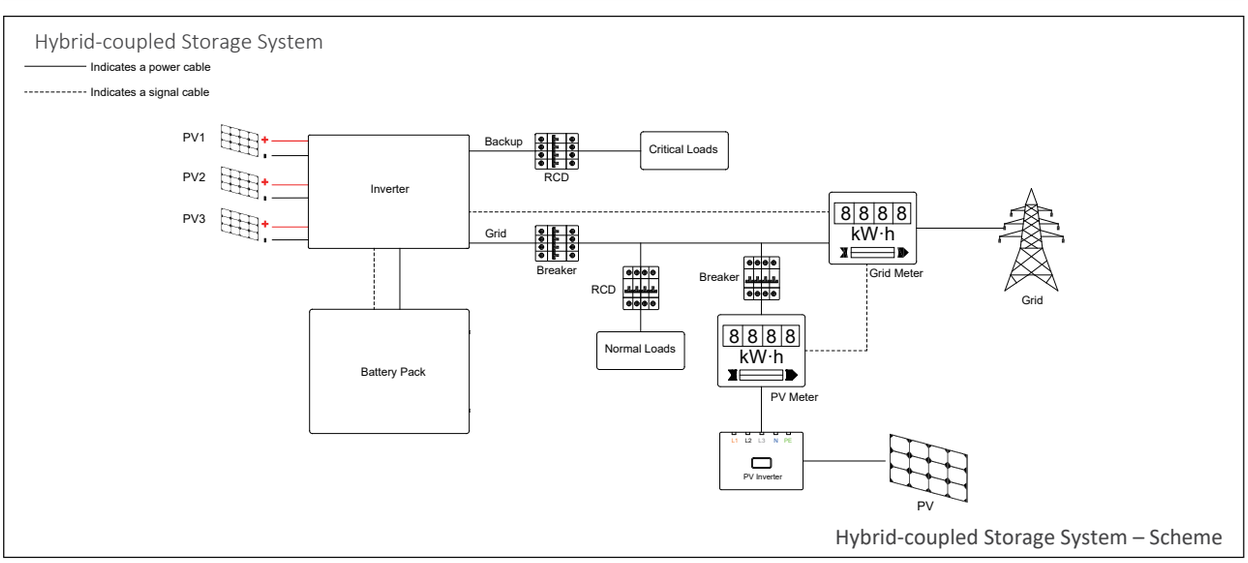

Hybrid-coupled Storage System – Scheme

Venus HVT Series & Venus HV5-01

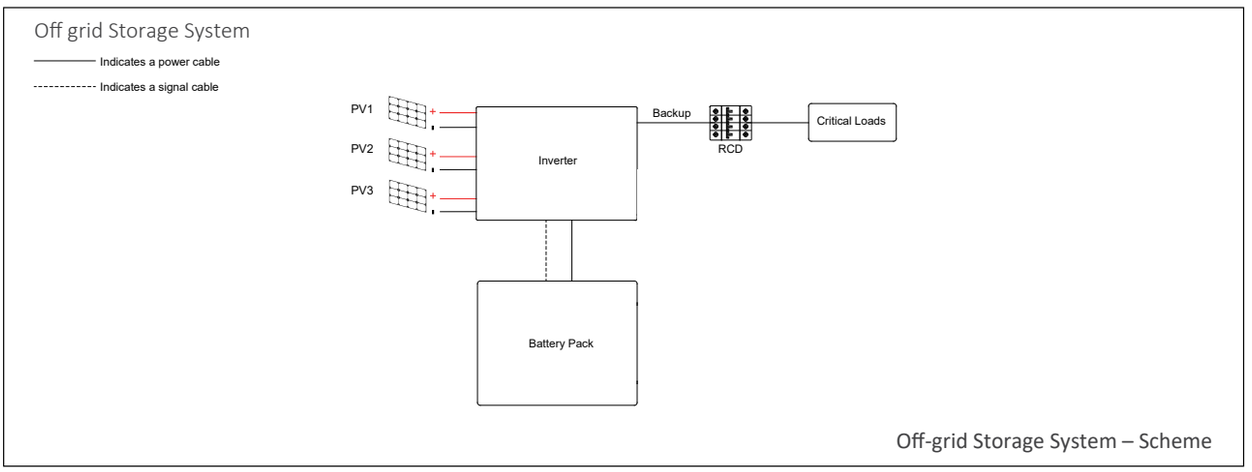

Off-grid Storage System – Scheme

20

2.5 Labels

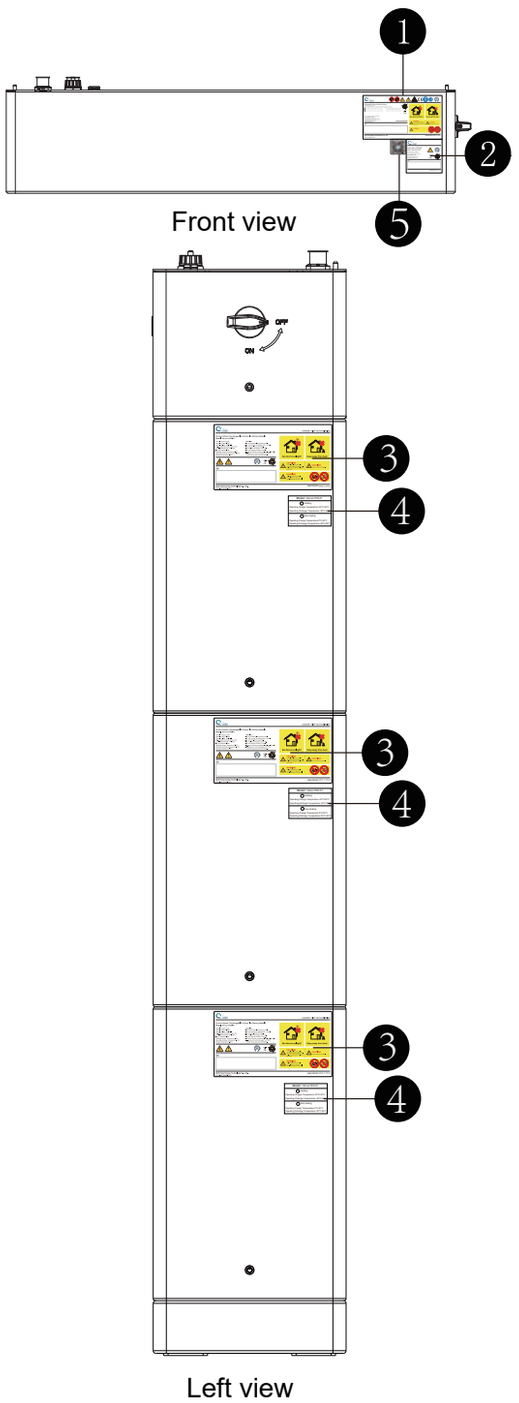

❶ Battery System Label

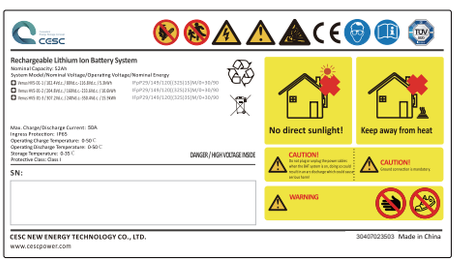

❷ Battery Control Unit (BCU) Label

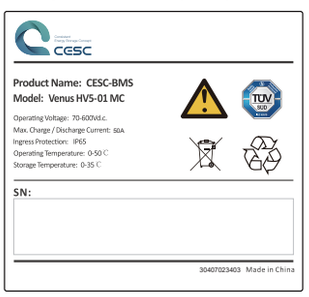

❸ Battery Module Label

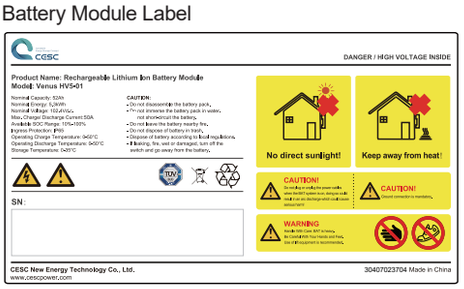

❹ Option Label

Model: Venus HV5-01
◯ Heating Operating Charge Temperature:-20°C-50°C Operating Disharge Temperature:-20°C-50°C
◯ Non-heating Operating Charge Temperature:0°C-50°C Operating Disharge Temperature:0°C-50°C

❺ QR code



Venus HVT Series & Venus HV5-01

03 Installation instructions

3.1 Scope of delivery for inverter installation

The following items are required for inverter installation.

		
Inverter (X1)	TOP Cover (X1)	Right Cover (X1)
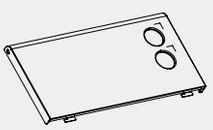	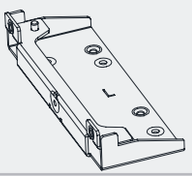	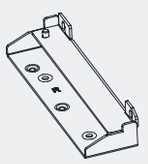
Left Cover (X1)	Left Support Foot (X1)	Right Support Foot (X1)
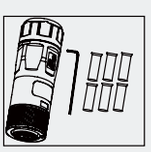	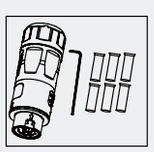	
Grid Connector(X1)	Backup Connector(X1)	PV Connectors (×3)
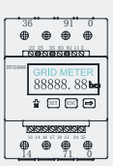	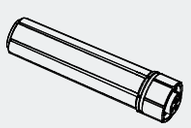	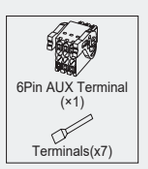
Meter (X1)	WiFi Module (X1)	6 Pin AUX Terminal Block (×2)
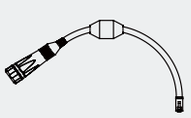	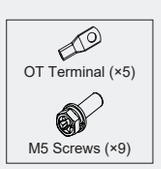	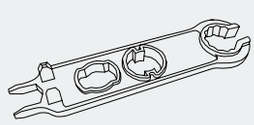
Meter communication cable (x1)	Screws and Terminals Set (X1)	Wrench Tool (X1)
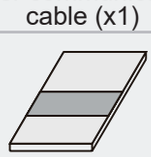	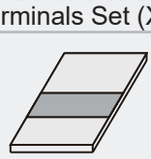	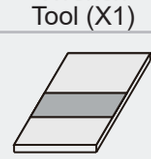
Quick Installation Guide (x1)	Wiring Diagram (x1)	Warranty Card (x1)

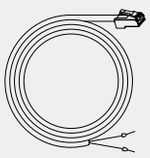	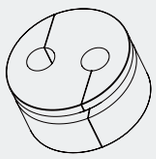	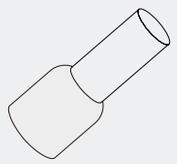
Communication line (x1)	Sealing ring (x1)	Tubular terminal (x15)

Scope of delivery for wall bracket installation(optional)

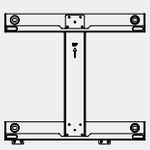		
Horizontal Beams of wall bracke(X1)	Support Plate for Cable Cover (X1)	

3.2 Necessary Materials for Installation

		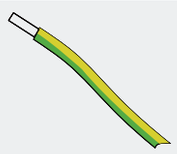
Three-core outdoor copper cable	DC Cable:PV1-F	PE Cable
		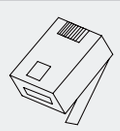
Conduits	Ethernet Cables (Cat5e, UTP, UV-resistant for outdoor use)	RJ45 Plugs
		
M5 PE Terminal		

3.3 Scope of delivery for Battery installation

The following items are required for BCU installation and ALL are included in the BCU carton.

NO.	Object	Description	Quantity
1	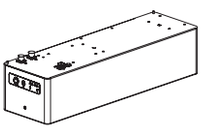	Battery Control Unit	1
2		Base	1
3	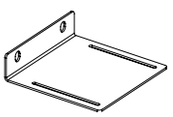	Locking Bracket	1
4		Positive Power Cable (BCU-PCS) 10mm²,180mm	1
5		Negative Power Cable (BCU-PCS) 10mm²,150mm	1
6		COM Cable (BCU-PCS) 24AWG,250mm	1
7		Ground Cable (BCU-PCS) 8AWG,160mm	1
8		Ground Cable (PCS-Electric Box) 8AWG,3000mm	1
9		M8 Expansion Bolt	4
10	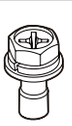	M5 Screw	6
11	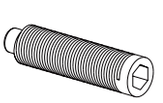	Ball Plunger	2

NO.	Object	Description	Quantity
12		Hex Wrench	1
13		RJ45-Plug	1
14		M6 Screw	4
15	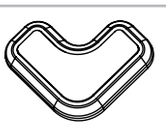	Plastic Foot Mats	4
16		Transfer nut	4
17	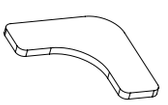	Anti-slip rubber mats	4
18	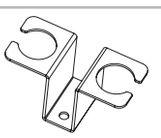	Tamper - proof plate	1

The following items are required for Battery Module Installation.

NO.	Object	Description	Quantity
1	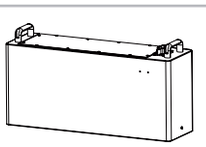	Battery Module	1
2	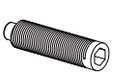	Ball Plunger	2

3.4 Tools & Instruments prepared (not supplied)

The following tools shall be prepared before installation.

 Hammer drill (with a Φ10 mm drill bit)	 Torque socket wrench SW10	 Multimeter (DC voltage range ≥ 1000 V DC)
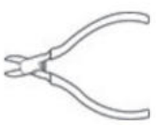 Diagonal pliers	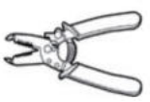 Wire stripper	 T20 screwdriver(torque range: 0-5 N m)L < 200mm
 Rubber mallet	 Utility knife	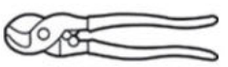 Cable cutter
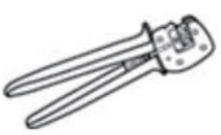 Crimping tool (model: PV-CZM-22100)	 Cord end terminal crimper	 Disassembly and Assembly Tool of PV connector
 Vacuum cleaner	 Heat shrink tubing	 Heat gun
 Marker	 Measuring tape	 Bubble or digital level
 Bubble or digital level	 Safety goggles	 Anti-dust respirator
 Safety shoes	 T20 Screwdriver	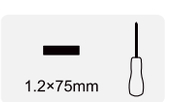 Flat-Head Screwdriver

WARNING

The battery modules are heavy. Wear appropriate personal protective equipment (such as gloves and safety shoes) when handling the unit. Only a sufficient number of trained movers should lift the battery modules. The use of lift equipment is recommended.

3.5 Installation location and clearance

Installation location requirements:

- There must be not highly flammable or explosive materials nearby.
- The ambient temperature should be within the range of -20°C to 50°C (-4°F to 122°F).
- The battery module must be installed on flat leveled ground that can support its weight.
- Product shall be installed indoors (e.g. in a basement or a garage) or outdoors under an eave out of direct sunlight.

Recommendations:

- The building should be designed to withstand earthquakes.
- The area should be waterproof and properly ventilated (IP65).
- The product should be installed out of reach of children and animals.

⚠ **CAUTION**

If the ambient temperature is outside the operating range, the battery module will stop operating to protect itself. The optimal temperature range for the battery module to operate is from 15°C to 30 °C (59°F to 86°F). Frequent exposure to harsh temperatures may deteriorate the performance and lifespan of the battery module.

Venus HVT Series & Venus HV5-01

Recommended clearance:

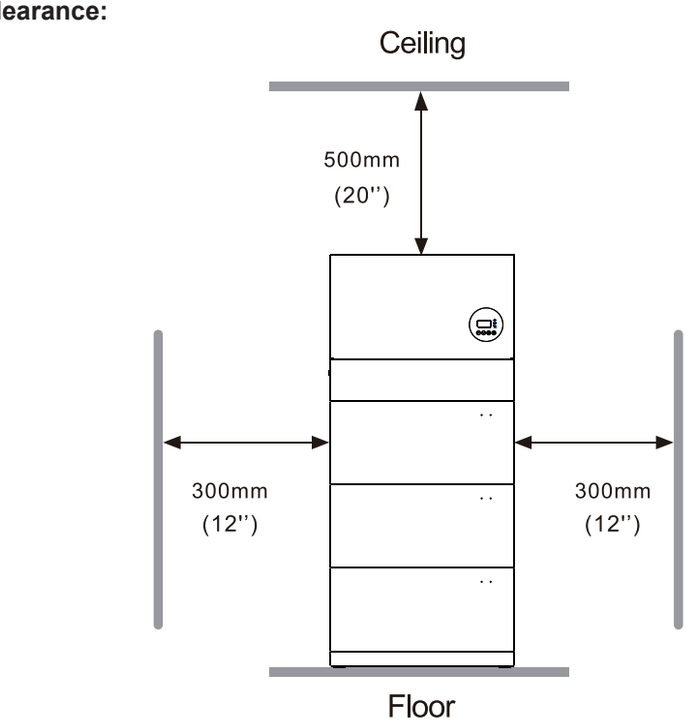

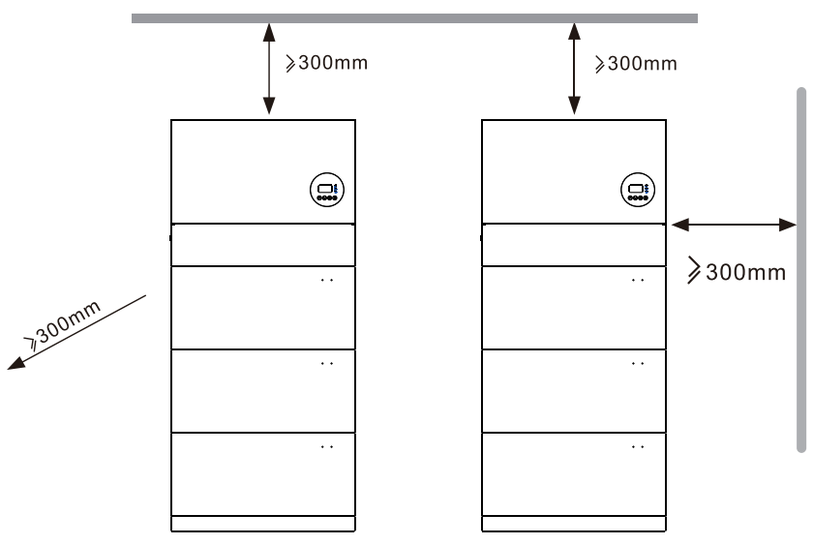

Recommended clearance for the left, right and top of the product is shown in the figure for the proper ventilation and installer convenience.

3.6 Equipment installation

3.6.1 Battery installation

Step 1: Install the base

For Base,you have three optional assembly methods

Method1: Without installing the feet, directly hit the expansion bolts.

Method2: Install foot mats.

Method3: Optional installation of adjustable foot cups (Self-purchase as per customer's requirement).

Method 1:

1. Lay the base flat on the floor horizontally.
2. Align the installation base with the wall and keep 30mm away from the brick wal, or 150mm away from the wooden wall.
3. Mark the drilling hole positions using a marker on the floor.
4. Then drill the hole and install the base with M8 expansion bolts.
5. Hole diameter 12mm and depth 60mm. Fix the M8 Expansion bolts, tightening torque: 20N.m.

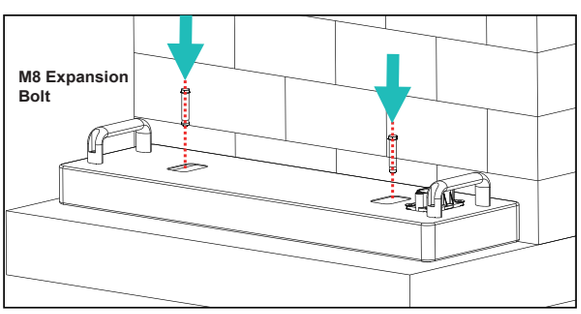

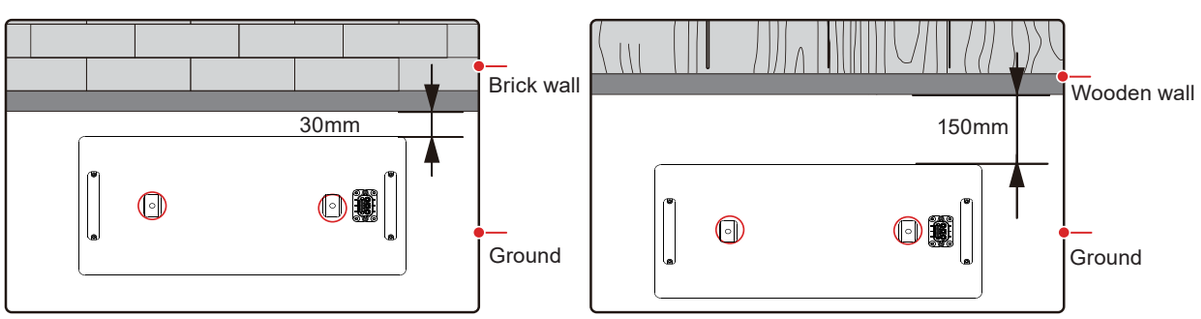

Venus HVT Series & Venus HV5-01

Method 2:

Step1:Tighten transfer nuts with Slotted screwdriver.
Step2:Place plastic stands.
Step3:Tighten Hexagon socket head cap screws by Allen wrench.
Step4:Stick antiskid rubber pads to the surface.

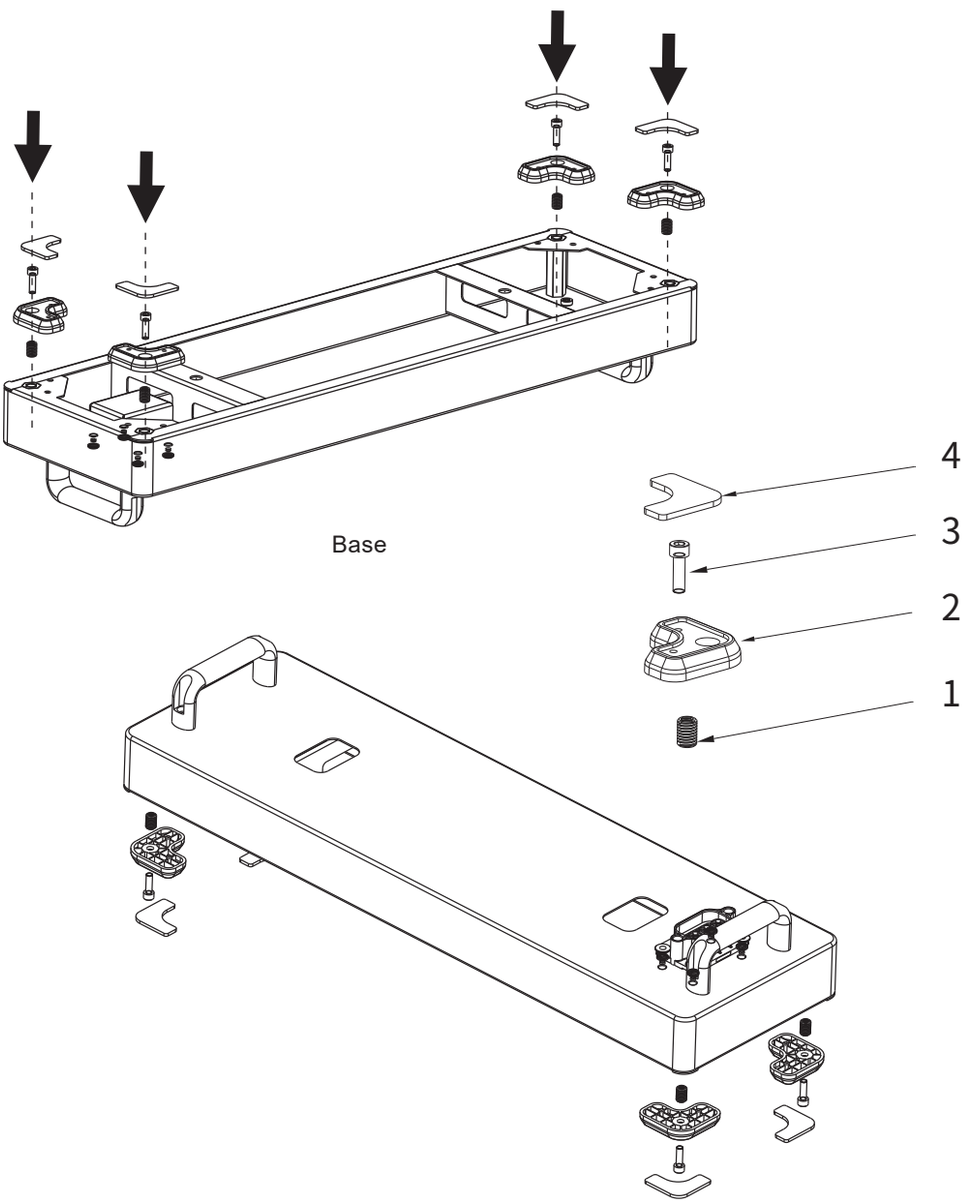

Base

Base

Method 3:

If you do not use expansion screws to fix the base or install plastic feet, you can choose the right size of M10 foot cups to be installed on the bottom of the base as needed to fine-tune the battery.

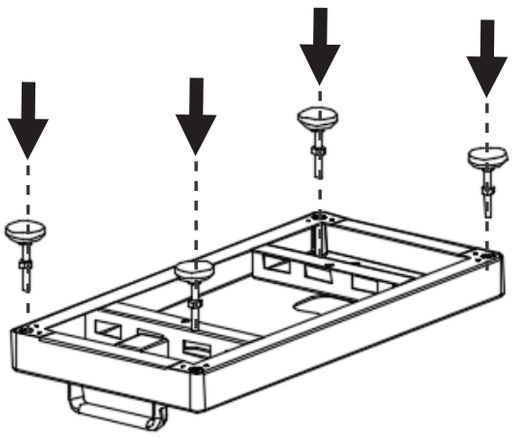

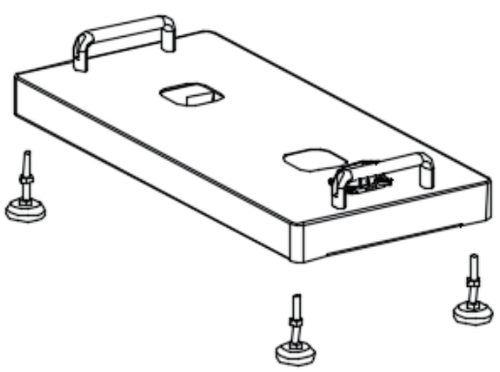

Step 2:

Place the first battery module on the base.

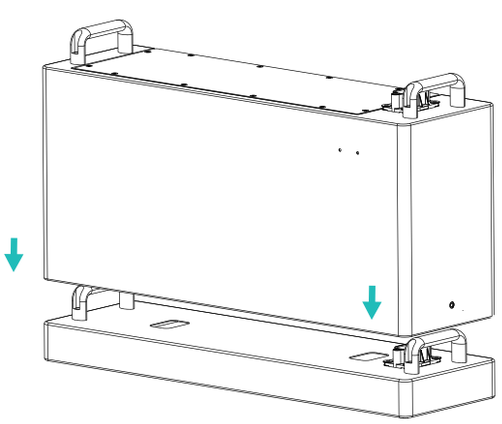

Venus HVT Series & Venus HV5-01

Step 3:
Install the second and third battery expansion module,after the battery packs are stacked, each pack needs to be secured with two screws.

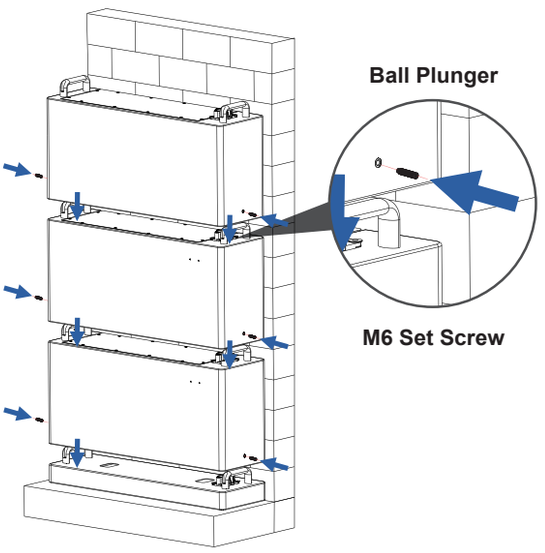

Step 4:
Attach the Wall Mount Bracket to the BCU using M5 screws.

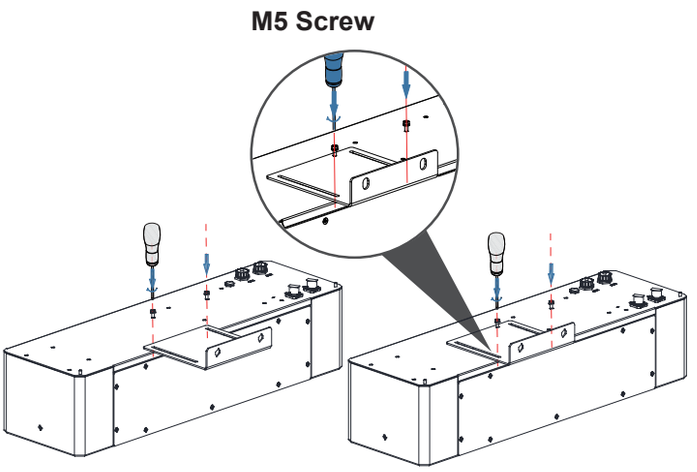

⚠ CAUTION

Place the battery module or BCU at both ends.
Otherwise, the composite connector pins will be damaged, and the battery system cannot run.

Step 5:

- After the device has been protected from dust, drill the hole and install the bracket with M8 expansion bolts.
- Hole diameter 12mm and depth 60mm. Fix the M8 Expansion bolts, tightening torque: 20N.m.

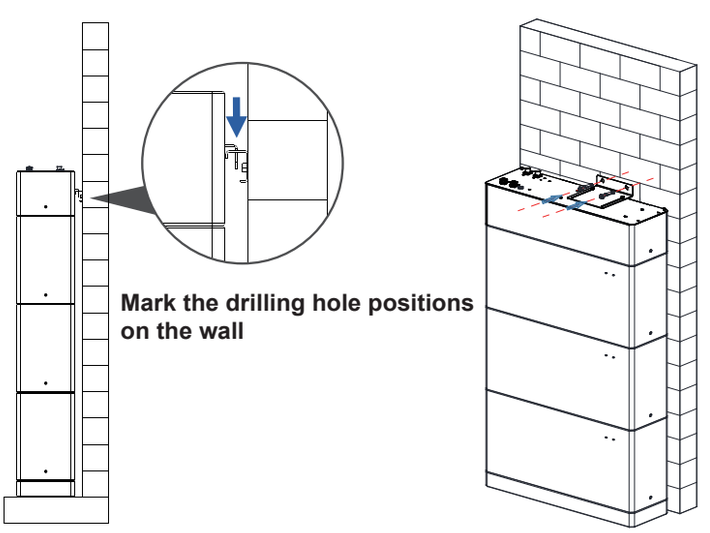

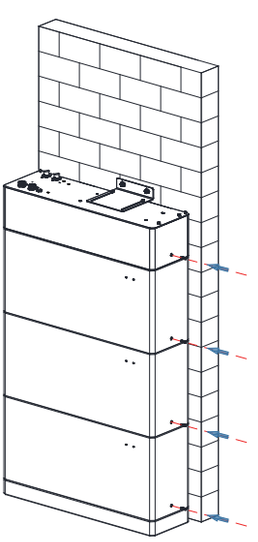

3.6.2 Inverter installation

1. Fit the left and right side brackets onto the top of the battery.
2. Attach the inverter to the mounting bracket. Mount the supporttng bracket at the bottom of the inverter.

Step 1:

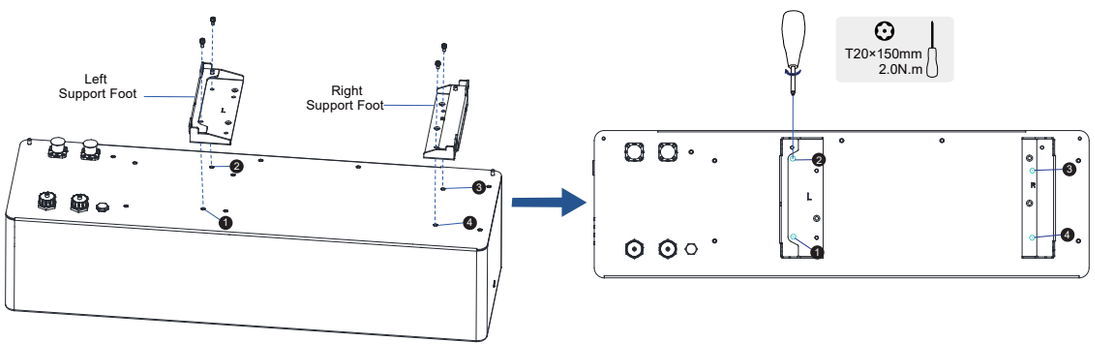

Step 2:

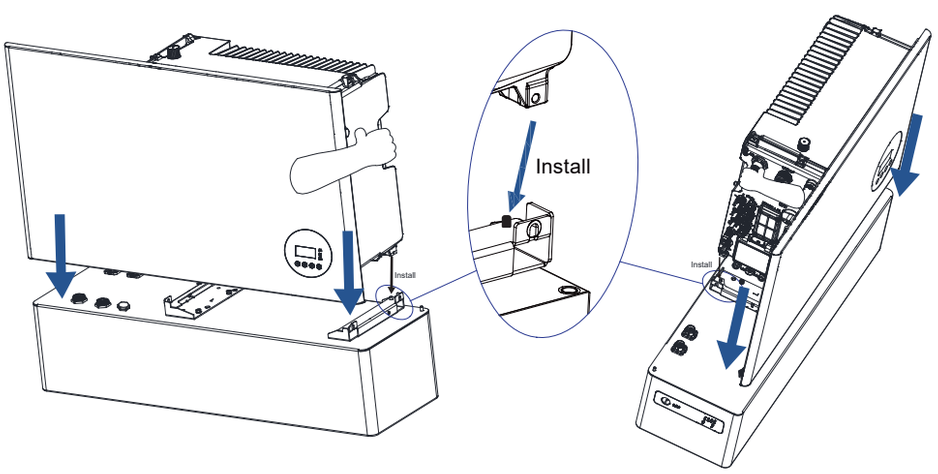

Step 3:

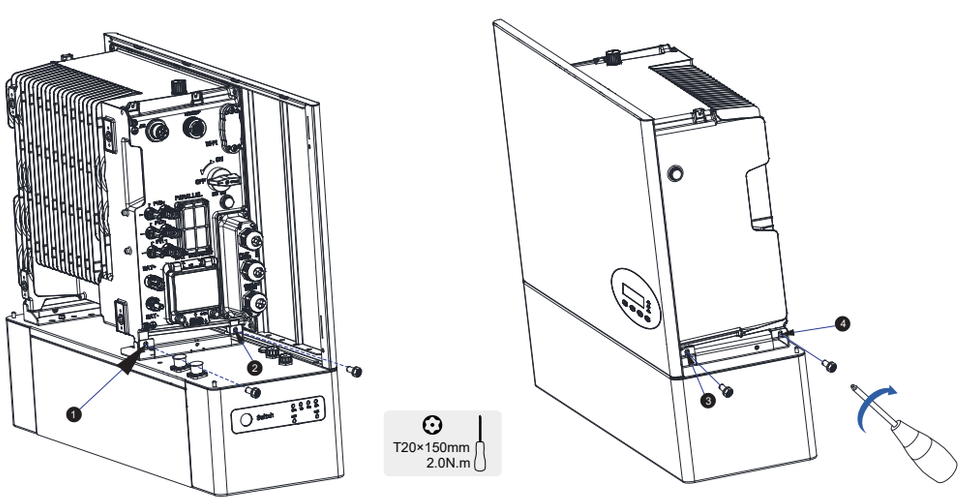

04 Cable connection

4.1 Connecting additional grounding

External grounding points are provided at the left side of the inverter.
Prepare M5 OT terminals, strip the grounding cable insulation, insert the stripped part of the grounding cable into the ring terminal lug and crimp using a crimping tool.
Connect the OT terminal to grounding point using the torque 2.0 N.m with TX20 screwdriver.
Additional grounding connection for inverter.

Step 1: Additional grounding connection

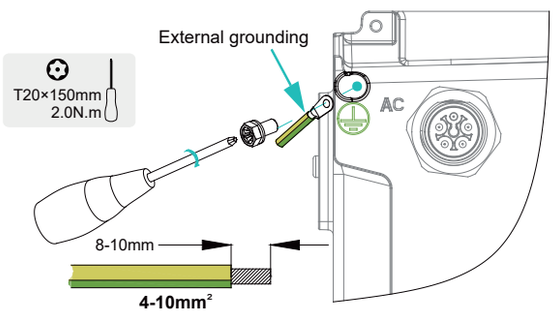

Step 2: Inverter grounding point with battery

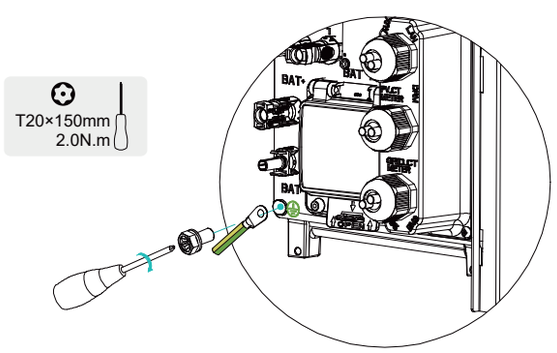

NOTICE

Before doing electrical connection, please ensure the PV switch & all AC and BAT circuit breakers in the energy storage system are switched OFF and cannot be reactivated.

4.2 Requirements for the AC connection

NOTICE

Residual-current monitoring unit:
The inverter does not require an external residual-current device when operating.
If local regulations require the use of a residual-current device, or Hybrid-coupled storage system with big coupling capacity from the PV array and PV inverter, the following must be observed:
The inverter is compatible with type A residual-current devices with a rated residual current of 100 mA or higher. Each inverter in the system must be connected to the utility grid via a separate residual-current device.

DANGER

You must protect each inverter with an individual grid/backup circuit breaker in order to ensure that the inverter can be disconnected safely.

NOTICE

For Australia and New Zealand installation site, the neutral cable of grid side and backup side must be connected together, otherwise backup output function will not work.

AC connection recommendation for 4kW			
Description	Max. Current	Breaker Type for 4kW	Recommend cable cross section
Grid Side	11.6A	16A	2.5~6mm²
Backup Side	8.7A	16A	2.5~6mm²

AC connection recommendation for 5kW			
Description	Max. Current	Breaker Type for 5kW	Recommend cable cross section
Grid Side	14.5A	25A	4~6mm²
Backup Side	10.9A	16A	2.5~6mm²

AC connection recommendation for 6kW			
Description	Max. Current	Breaker Type for 6kW	Recommend cable cross section
Grid Side	17.4A	25A	4~6mm²
Backup Side	13.0A	25A	2.5~6mm²

AC connection recommendation for 8kW			
Description	Max. Current	Breaker Type for 8kW	Recommend cable cross section
Grid Side	23.2A	32A	4~6mm²
Backup Side	17.4A	25A	4~6mm²

Venus HVT Series & Venus HV5-01

WARNING

Selecting a circuit breaker and copper conductor cross section
You should use APP or Cloud to do the right settng for example when selecting grid circuit breaker specification 32A or 40A and suitable copper conductor cross section, otherwise it increases the danger of the circuit breaker tripping under normal operating conditions.

4.3 Grid and backup connection

The steps for connecting the grid connector as follows:

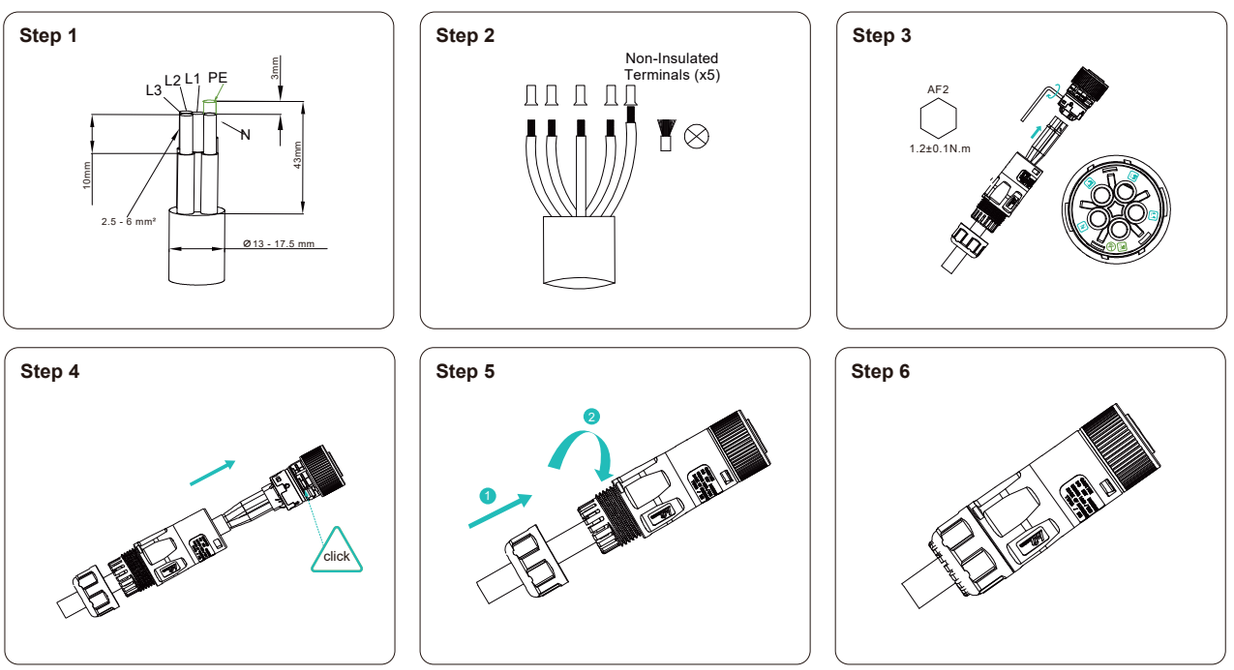

The steps for backup connection are similar as grid connection

NOTE

Do not install the grid and backup connector on the inverter.

Disassembly the Grid/Backup Connector

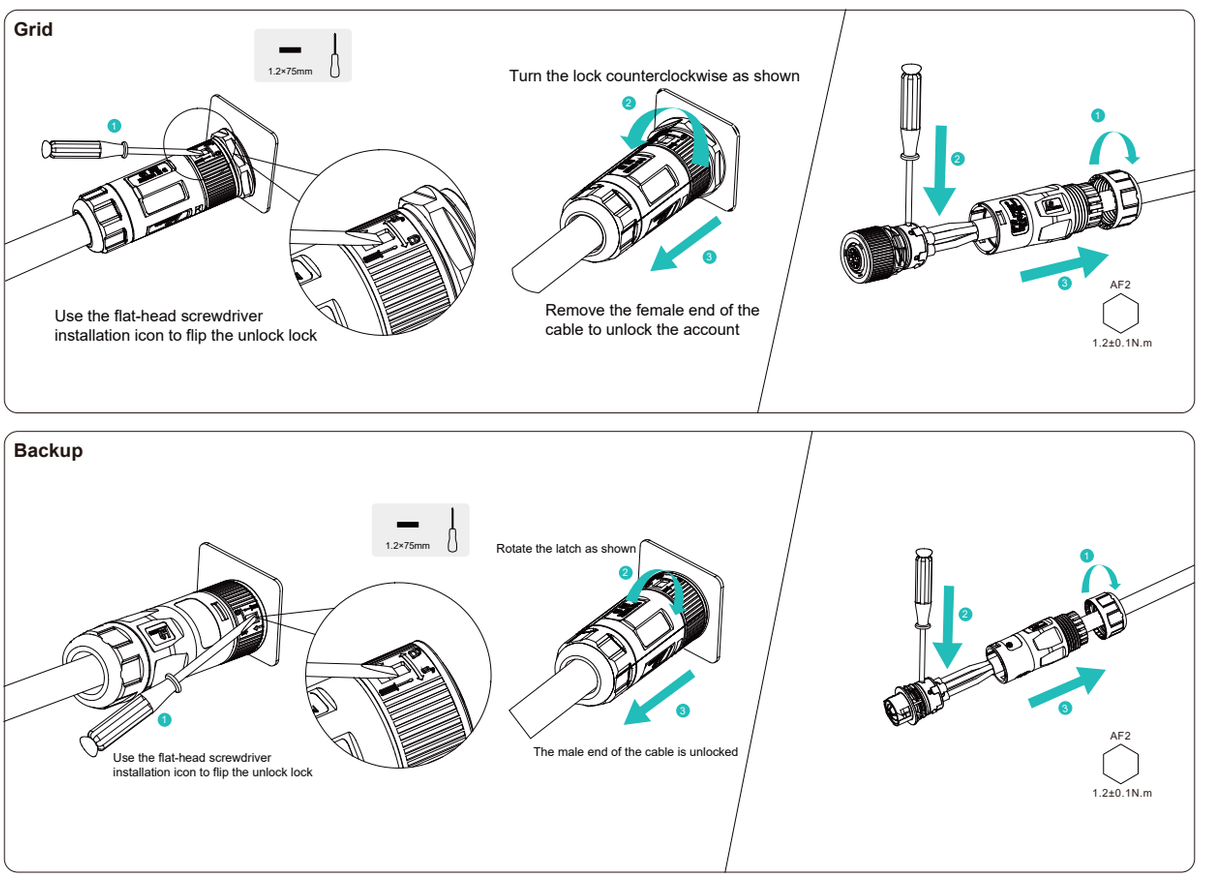

4.4 Electricity meter connection

Item	Current	Scenarios
DTSU666-3*230V 5(80)A	65A(a)	Three phase meter (without CT)
DTSU666-3*230V 5(80)A	100A	Three phase meter (without CT)
DTSU666-3*230V 250A/50mA	250A	Three phase meter (with CT)

(a): Current ≤65A Per phase
Loosen the swivel nuts of the cable glands on the COM connection cover of Inverter, and unscrew the 4 screws on the corners, then you will see the meter communication ports.

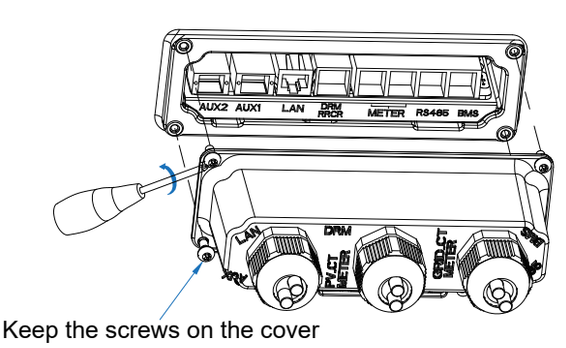

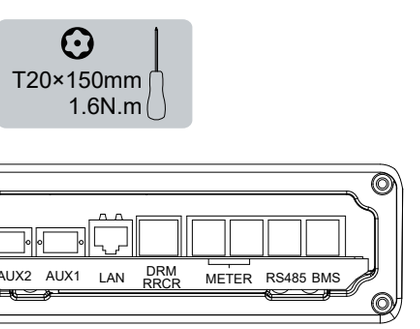

Venus HVT Series & Venus HV5-01

Replace the seal ring, then lead the meter cable through the cable gland of the COM connection cover, don't tighten the swivel nuts of the cable glands.
Install communication line to the meter communication port.

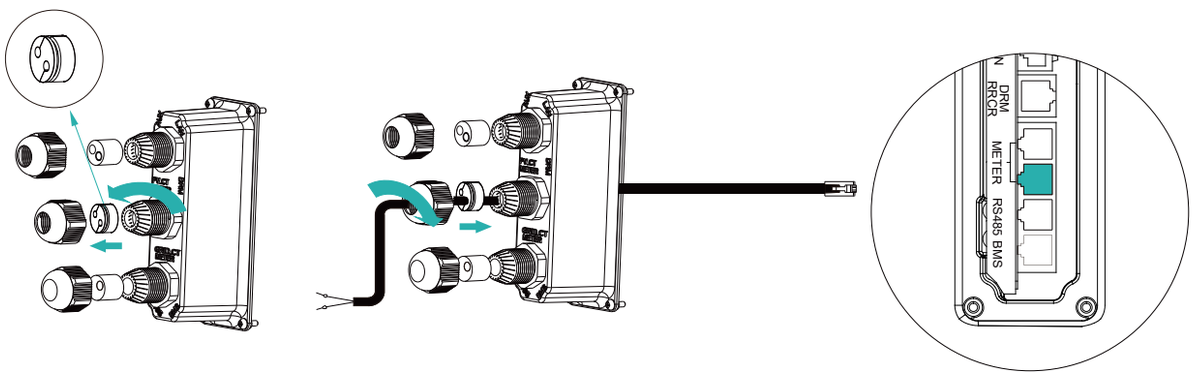

Replace the seal ring | Install communication line | Inverter side

The other steps for meter(without CT) DTSU666-3*230V 5(80)A connection as follows:

Wiring at Three-phase feed in (DC)

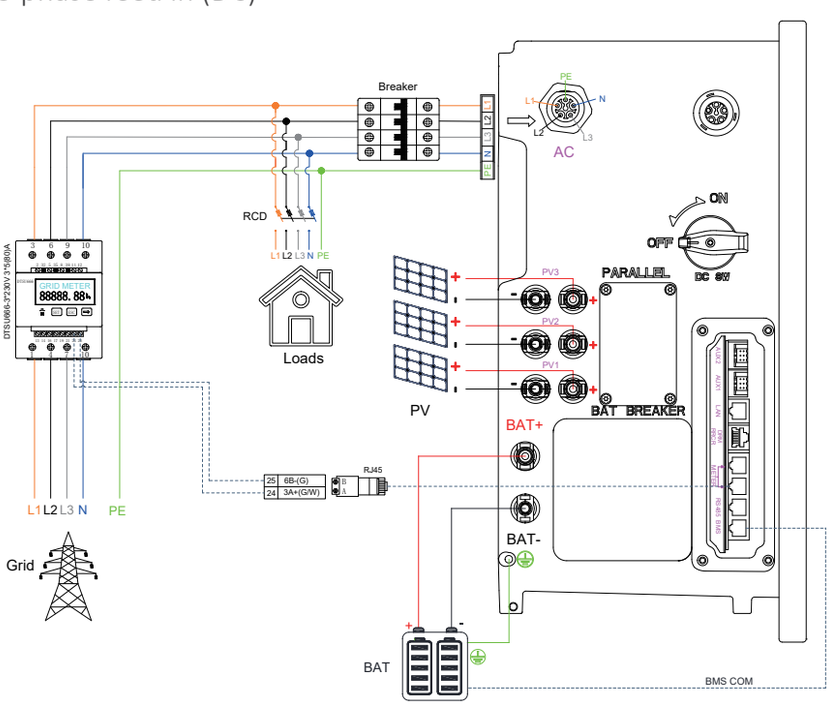

DC-coupled Storage System

Wiring at Three-phase feed in (AC)

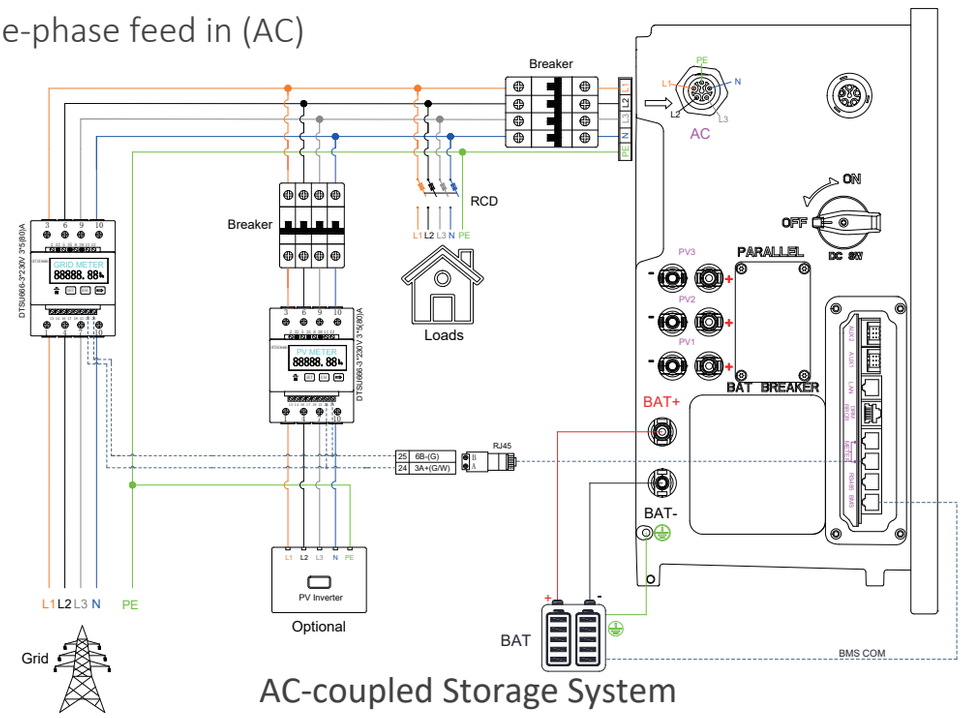

AC-coupled Storage System

Wiring at Three-phase feed in (Hybrid)

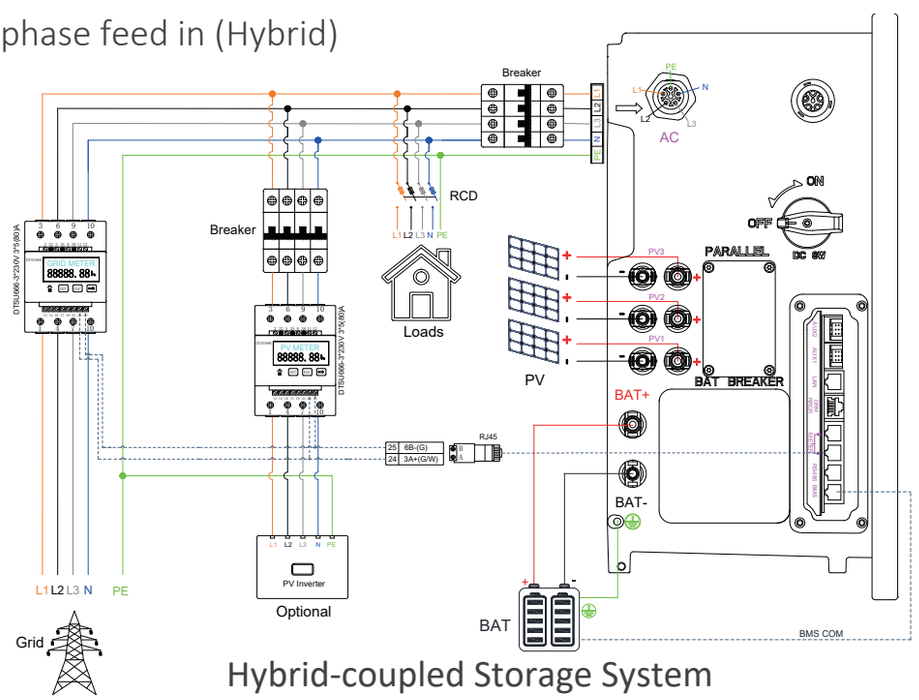

Hybrid-coupled Storage System

4.5 Configuring the CHINT meter

Model	Grid Meter Address	PV Meter Address
DTSU666-3*230V 5(80)A (without CT)	1(default)	2

When the meter is used as Grid meter, please follow the steps below to complete the address setting.

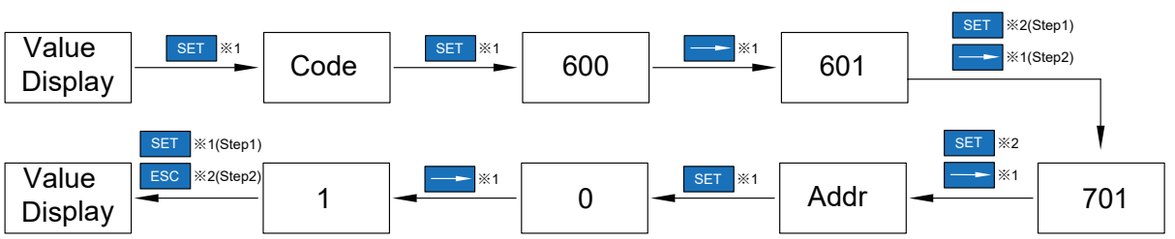

When the meter is used as PV meter, please follow the steps below to complete the address settng.

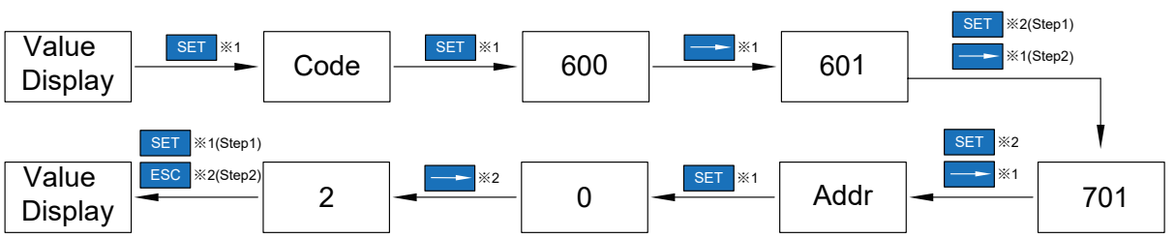

4.6 PV connection

Please ensure the follows before connecting PV strings to the Hybrid inverter:

- Make sure the open voltage of the PV strings will not exceed the max. DC input voltage (950-
- Vdc). Violating this condition will void the warranty.
- Make sure the polarity of the PV connectors is correct.
- Make sure the PV-switch, breakers of battery, AC-BACKUP and AC-Grid are all in their off-states.
- Make sure the PV resistance to ground is higher than 200kOhms.

The inverter uses the Vaconn D4/MC4(optional) PV connectors. Please follow the picture below to assemble the PV connectors.

PV conductor cross section requirements: 4~6 mm^2

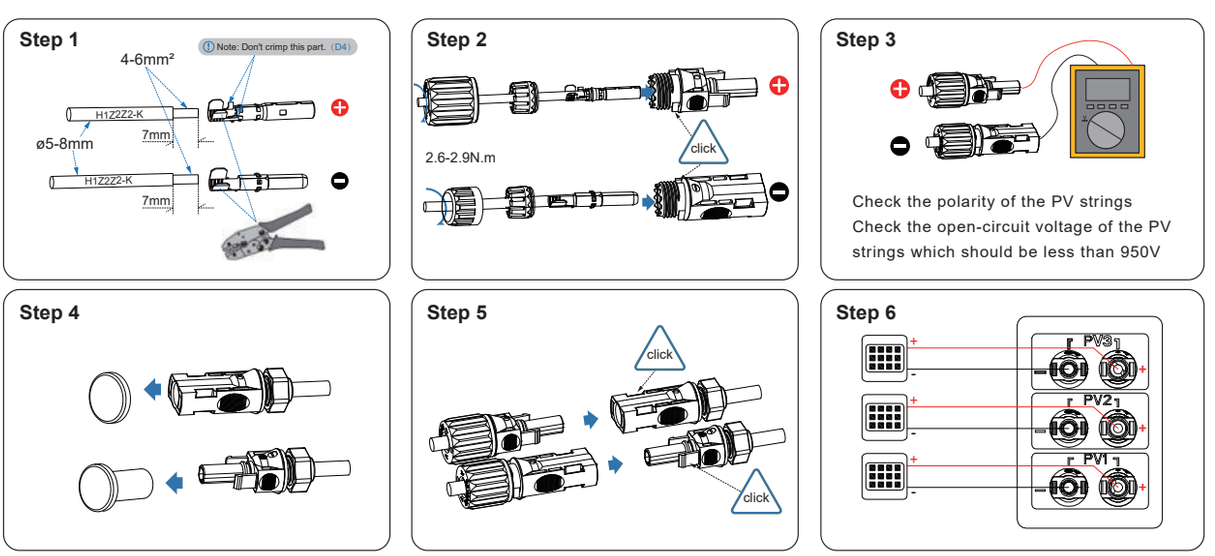

Disassemble the PV Connectors

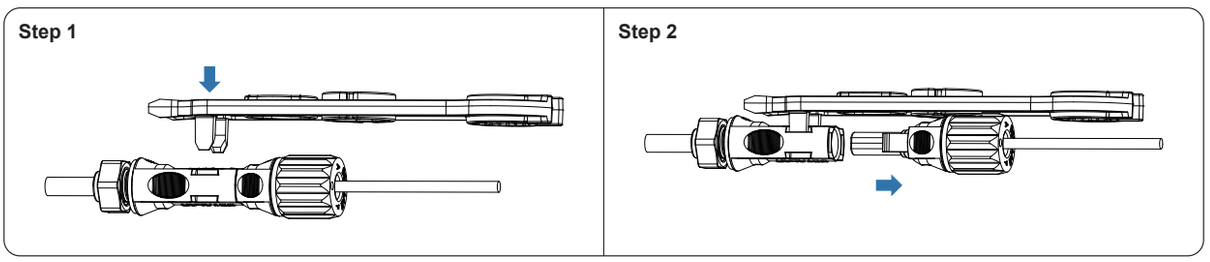

4.7 Electrical connection between the inverter and battery packs

Overview for internal electrical connection between inverter and BCU.

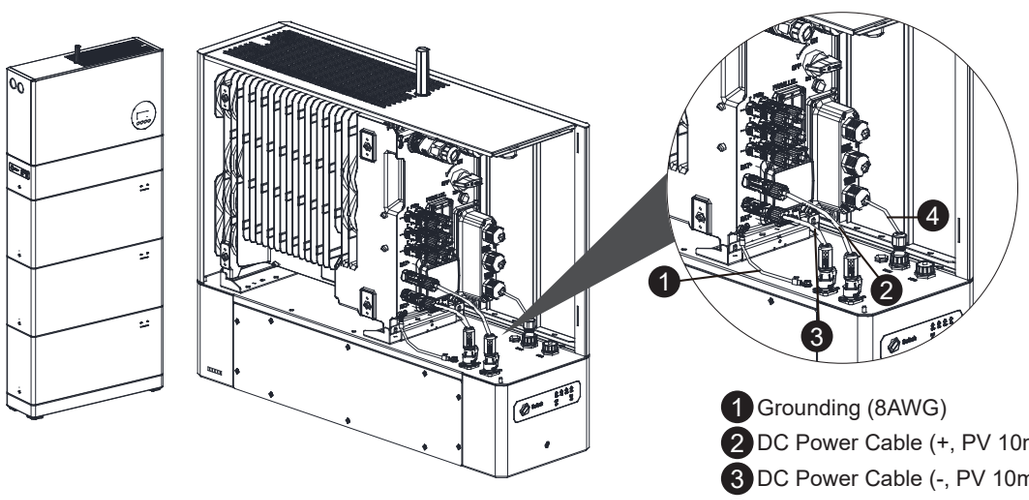

1. Grounding (8AWG)
2. DC Power Cable (+, PV 10mm²)
3. DC Power Cable (-, PV 10mm²)
4. Signal Cable (24AWG)

4.7.1 Installing grounding cables

Connect the ground point (⏚) of the BCU to the Inverter. Otherwise, electric shocks may occur.

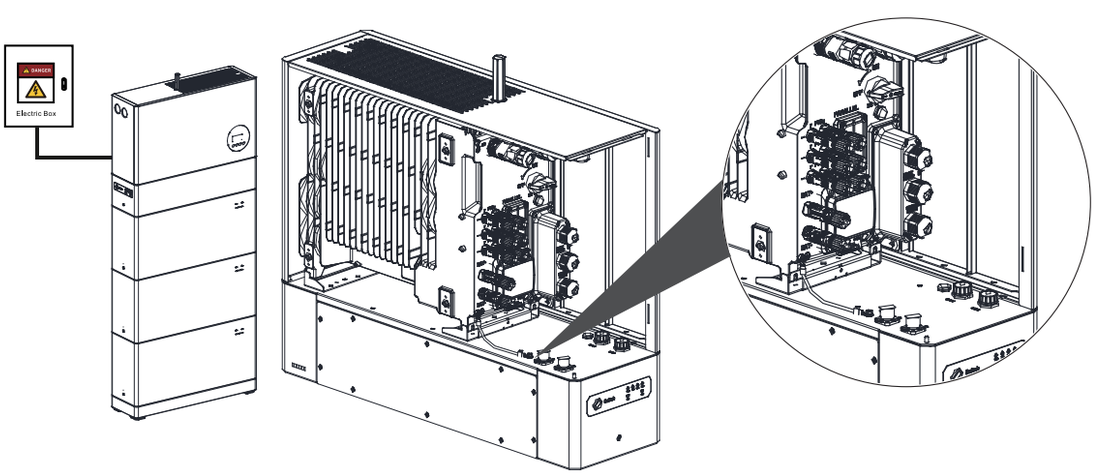

4.7.2 Installing DC power cables

Insert the positive and negative battery connectors into the corresponding DC input terminals (P+ and P-). The positive power cable (BAT+) is red and negative power cable (BAT-) is black. Before assembling DC connectors, label the cable polarities to ensure correct cable connections.

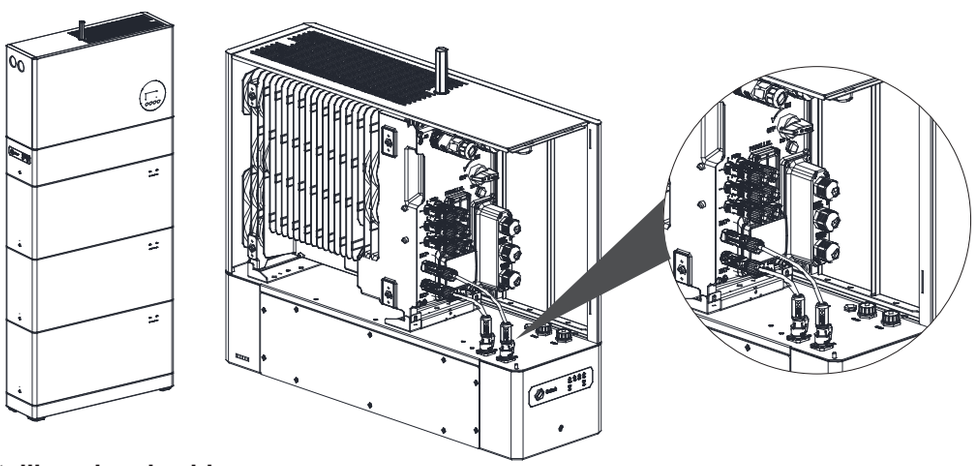

4.7.3 Installing signal cables

Choose signal cable type (CAN cable) based on the Inverter when laying out a signal cable. Separate the signal cable from power cables when connecting to the BCU and the Inverter. Keep it away from strong interference sources to prevent communication interruption.

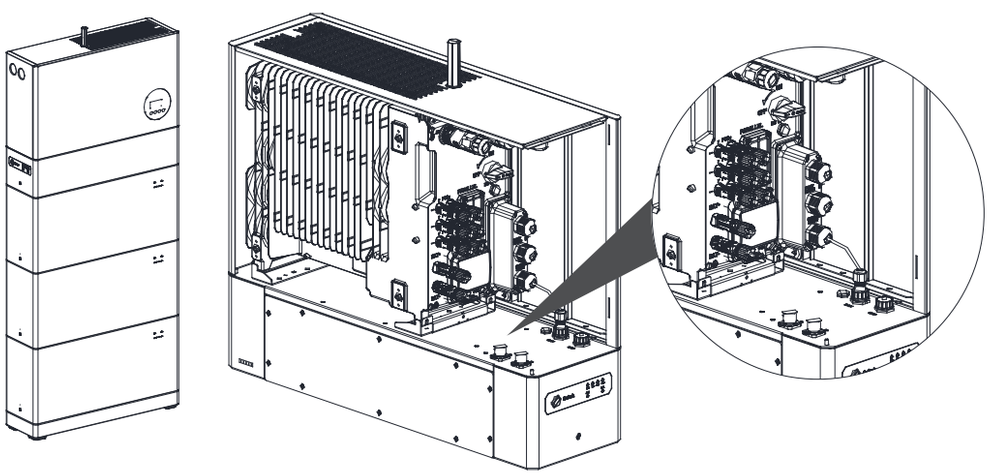

The wiring order of the signal cable is as follows:

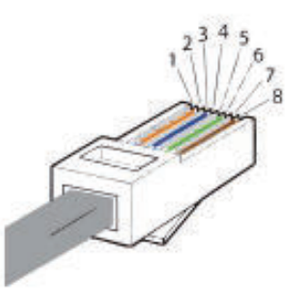

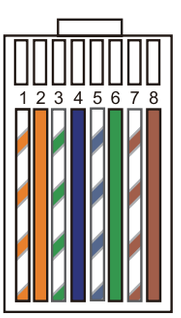

Sequence	Color	CAN
1	White with an orange stripe	NC
2	Orange	NC
3	White with a green stripe	NC
4	Blue	CAN_ H
5	White with a blue stripe	CAN_ L
6	Green	NC
7	White with a brown stripe	NC
8	Brown	NC

4.8 AUX/LAN/DRM&RRCR/Meter/RS485/BMS connection

For other communication (AUX, LAN, RRCR, DRM, Meter, RS485) connection, please follow the below steps.

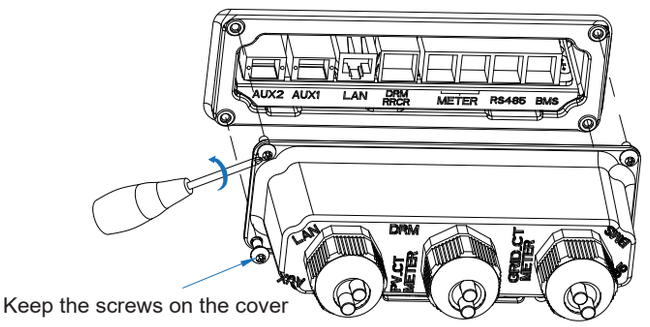

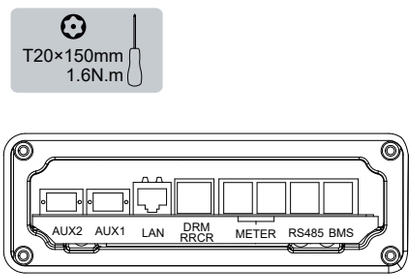

1. Loosen the cable glands on the COM connection cover, and then unscrew the 4 screws on the COM connection cover.
2. Lead the communication cables through the cable glands of the COM connection cover, don't tighten the swivel nuts of the cable glands.
Insert the RJ45 plugs to the relative RJ45 sockets.
1) For meter wiring, refer to Chapter 6.3.5 for Meter Connection.
2) If DRM support is specified, the system may only be used in conjunction with a Demand Response Enabling Device (DRED). This ensures that the system implements the commands from the grid operator for active power limitation at all times. The system and the Demand Response Enabling Device (DRED) must be connected in the same network.
Only DRM0 is available for Inverter.
3) Take out 6 pin terminal block for AUX connection. To do wiring connection, insert a screwdriver (blade width: 1.2 mm) into the relative connection position side.
For AUX position definition, please see the AUX wiring documentation.

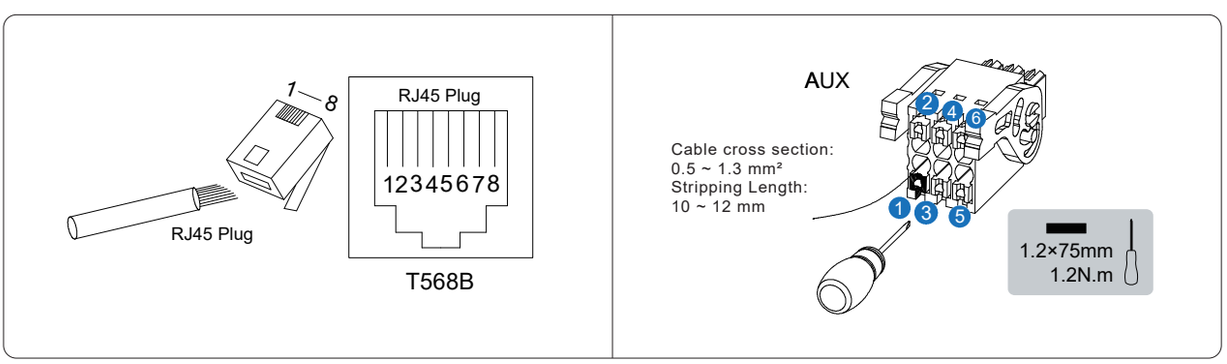

3. Place the COM connection cover against the inverter housing and tighten the 4 screws, at last secure the swivel nut of the cable glands.
The pin definition of the communication ports:

No / ITEM	1	2	3	4	5	6	7	8
BMS	NC	RS 485-A4	NC	CAN_ H	CAN_ L	NC	RS 485-B4	NC
RS485	12V	DEBUG-RXD-COM	GND	RS 485-B5	RS 485-A5	NC	DEBUG-TXD-COM	NC
METER	NC	NC	RS485-A7	NC	NC	RS 485-B7	NC	NC
DRM	DRED 1/5	DRED 2/6	DRED 3/7	DRED 4/8	REF GEN/0	COM LOAD/0	NC	NC
RRCR	K1	K2	K3	K4	3.3V	NC		
AUX 1	DO1_NO	DO1_COM	DO1_NC	DI-negative	DI-positive	GND		
AUX 2	DO2_NO	DO2_COM	DO2_NC	DI-negative	DI-positive	GND		

05 Commissioning

5.1 Install the tamper-proof plate

After completing the wiring, please install the tamper-proof plate.

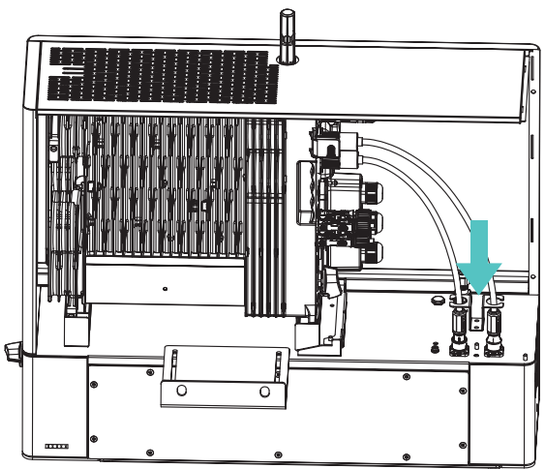

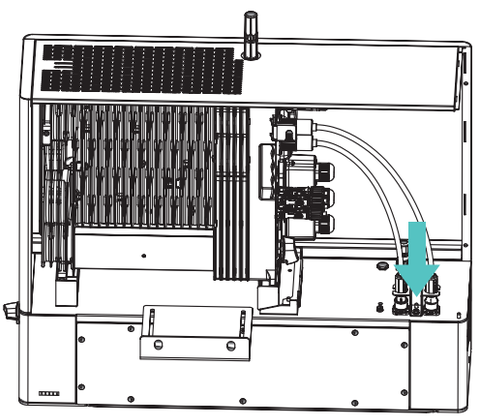

5.2 Mount the cover

5.2.1 Mount the top cover

Step1

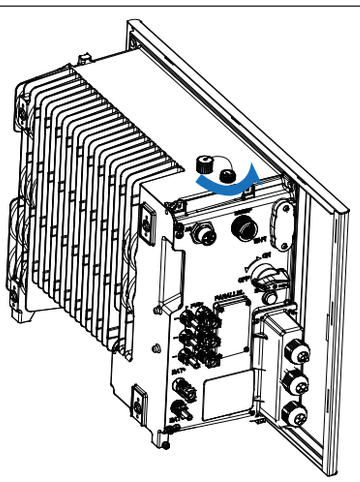

Step2

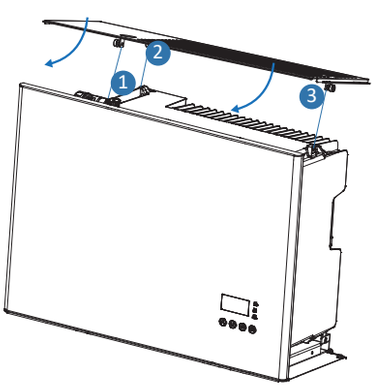

Step3

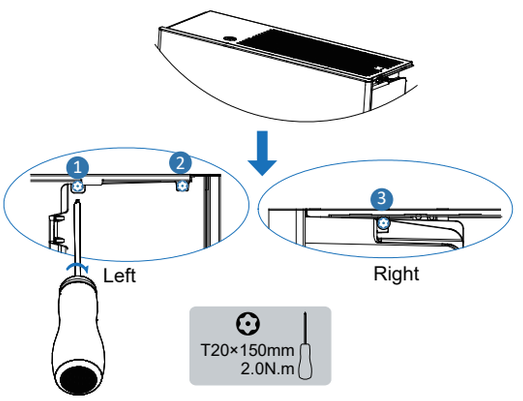

5.2.2 Mount the right cover

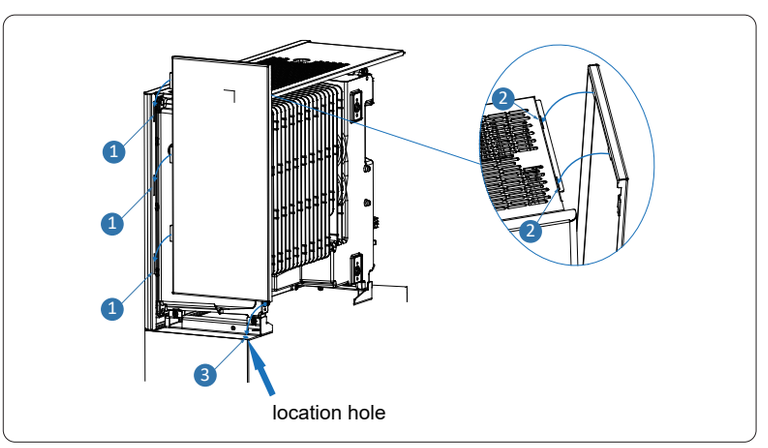

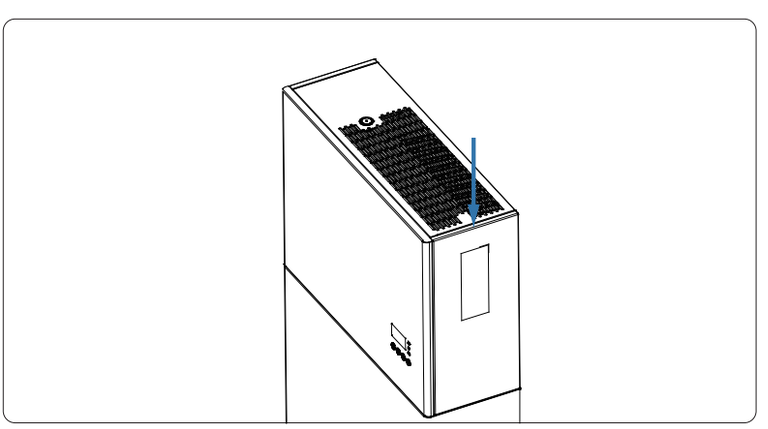

Venus HVT Series & Venus HV5-01

5.2.3 Connect the grid & backup connector and mount the cable cover

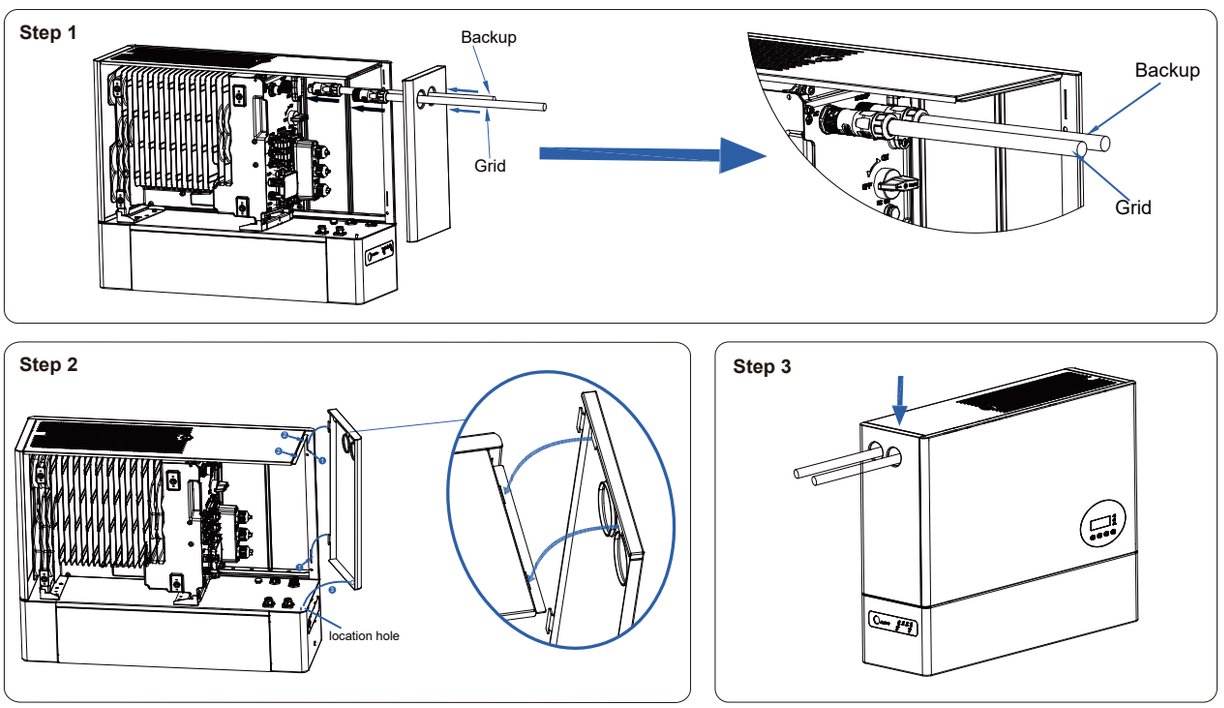

5.3 Mount the inverter with wall bracket (optional)

Mount the inverter

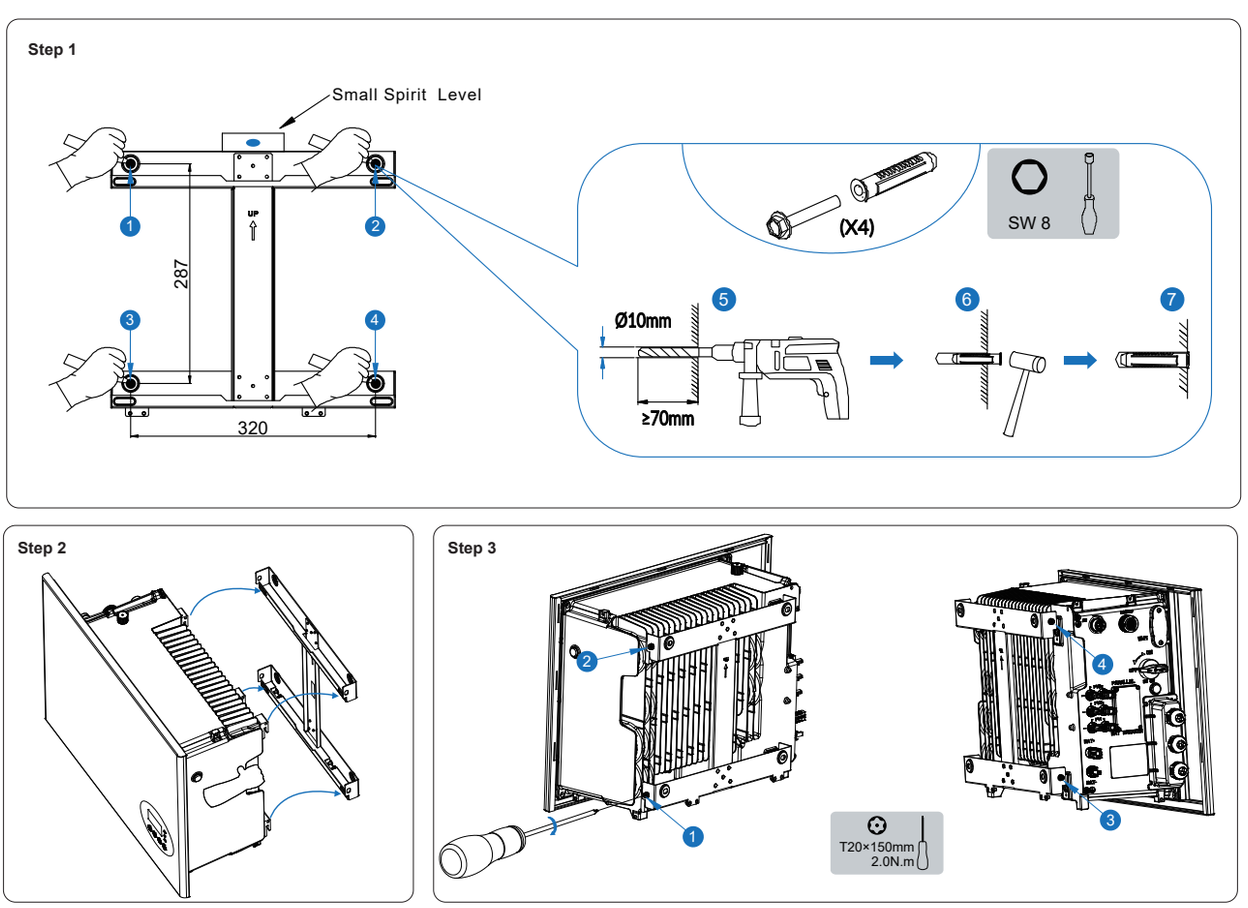

Mount the top cover, the mount steps same as 5.2

Mount the right cover and cable cover

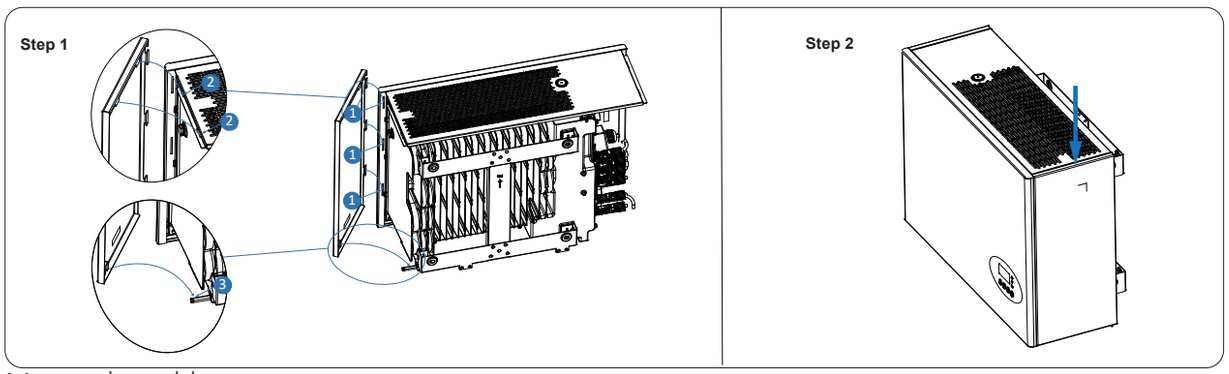

Mount the cable cover

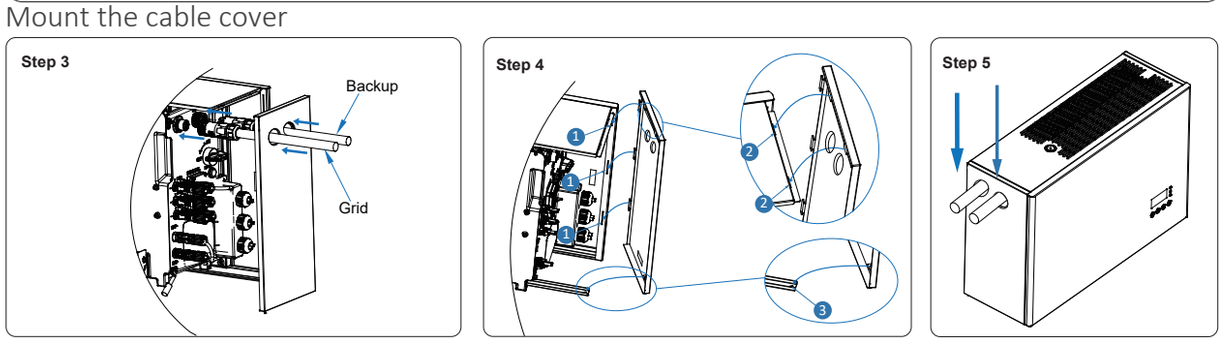

5.4 Mount the Wi-Fi module.

Remove the Wi-Fi protection cover and screw the Wi-Fi module.

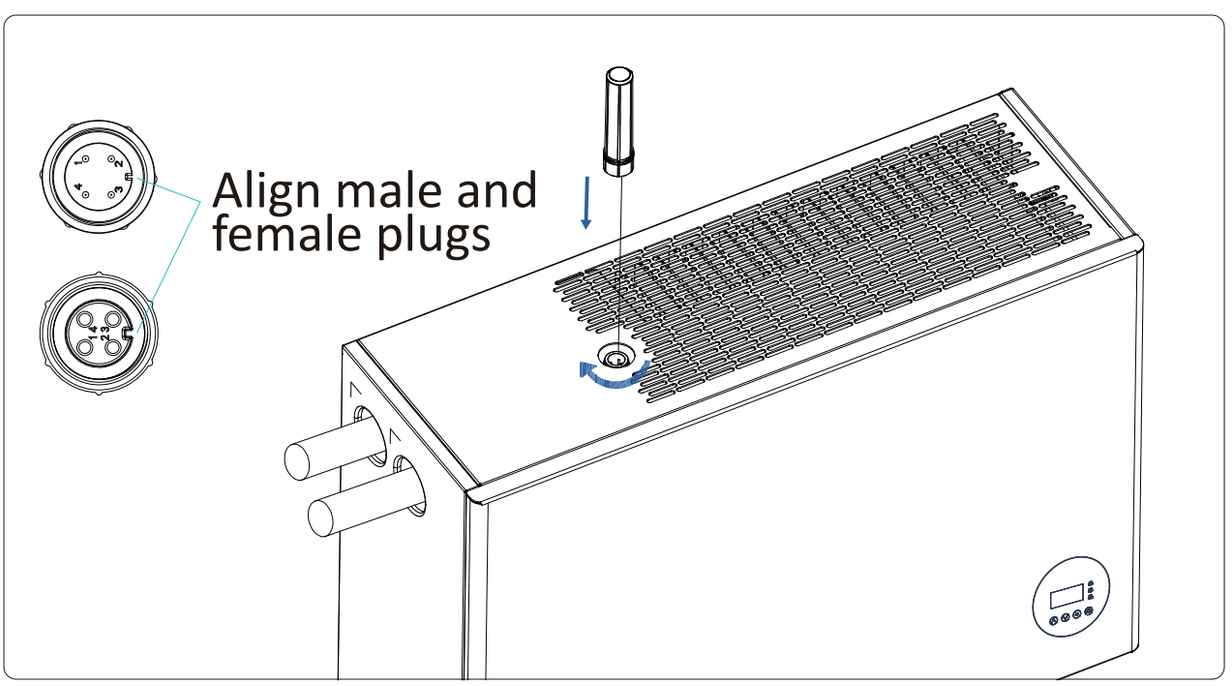

After finishing electrical connection of energy storage system, do the following operations.
Check the voltage range and frequency range of the grid and the installation of meter (without CT).

- Install the top and right decorative cover of the inverter.
- Follow the instructions in Chapter 5.5. to powering on the system.
- Install the cable cover of the inverter.

5.5 Inspection before power on

Table: Checklist and Acceptance Criteria

No.	Check Item	Acceptance Criteria
1	Installation	The installation is accurate and secure.
2	Grounding	The Groundling cable is connected correctly and securely.
3	Cable connection	The DC power cables, signal cables and ground cables are connected correctly, and securely.
4	Installation environment	The installation space is proper, and the installation environment is clean and tidy.

5.6 System power on

Power on the system through the following steps:

- Step 1: Switch on the AC breaker between backup connection port of the inverter and the house loads.
- Step 2: Switch on the battery breakers of all inverters.
- Step 3: Switch on the battery breakers of all batteries.
- Step 4: Press the switch button (SW) on equipment, the green running LED should normally be ON.
- Step 5: After confirming that the system has entered UPS mode, switch on the AC breakerbetween the inverter and the grid.
- Step 6: Switch on the PV switches on inverters.
- Step 7: Switch on the AC breaker between the PV-inverter and the mains grid (if there is any)

⚠ WARNING

When the system is running normally, must not to directly turn off the PV Switch. If the PV Switch must be turned off, please first disconnect the wirings between the Inverters and the loads on the backup side.

5.7 Power off

Power off the system through the following steps:

- Step 1: Switch off the AC breaker between backup connection port of the inverter and the house loads.
- Step 2: Switch off the AC breaker between AC connection port of the inverter and the mains grld.
- Step 3: Switch off the PV switches of all inverters.
- Step 4: Switch off the AC breaker between the PV-inverter and the mains grid (if there is any).
- Step 5: Switch off the battery breakers on all inverters.
- Step 6: Press the switch button(SW) to be OFF,ensure that all LED indicators are OFF and the system has shut down completely.

⚠ WARNING

After the system powers off, residual electricity and heat may still pose risks of electric shocks and burns. Therefore, it is advisable to wear protective gloves and wait 15 minutes after the system has powered off before performing any operations on the system.

5.8 Battery LED indicators

⚠ NOTE

○ refers to the LED indicator is off

● refers to the LED indicator is on

⊘ refers to the LED indicator is blinking

LED Indicator	SOC Indicator	Description
• Red light is off • Green light blinking for 1s • Blue light is displayed as shown in the figure	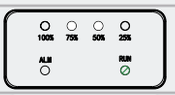	SOC=0%
		0%<SOC<25%
		25%≤SOC<50%
		50%≤SOC<75%
	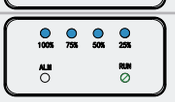	75%≤SOC≤100%

LED Indicator	LED & SOC Indicator	Fault Description
• Green light blinking for 1s • Red light on • Blue light is displayed as shown in the figure	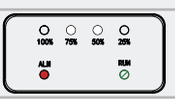	Over voltage
	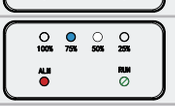	Over current
	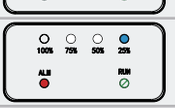	Under voltage
	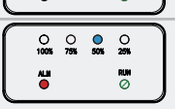	Over temperature

06 System maintenance

6.1 Routine maintenance

To ensure that the system can operate properly for a long term, it is recommended to perform routine maintenance according to the description in this chapter.

⚠ CAUTION

Power off the system before cleaning the system, connecting cables and ensuring the grounding reliability.

Check Item	Check Method	Maintenance Period
Appearance status	Check that the battery module is not damaged or deformed.	Once every 6 months
System running Status	Check that the battery module does not generate abnormal sound when it is in operation.	Once every 6 months
Electrical Connection	Check that cables are secured and intact. In particular, the parts touching the metallic surface are not scratched.	The first inspection is 6 months after the initial commissioning. From then on, the interval can be 6 to 12 months.
Ground reliability	Check that ground cables are securely connected.	The first inspection is 6 months after the initial commissioning. From then on, the interval can be 6 to 12 months.

6.2 Troubleshooting

6.2.1 Inverter error troubleshooting

Error No.	Error description	Troubleshooting
100007	Insulation_fault	1. Check whether PV cable connection is reliable. 2. Check whether PV cable is damaged.
100008	GFCI_fault	Restart system and check whether the fault is existing.
100009	Leakage current test failure	
100025	BAT_OVP	Check whether the actual battery voltage exceeds the battery charging cut-off voltage by more than 20V.
100026	BAT_UVP	Check whether the actual battery voltage is lower than the battery discharge cut-off voltage.
100042	Output_short_circuit	1. Use a multimeter to test the impedance of the off grid output. If it is small, check whether the wiring is correct. 2. Restart system, if error still exists, please call the service center.
100043	Output_overload	1. Check whether the load exceeds the rated power. 2. Restart system, if error still exists, please call the service center.
100043	Grid Load Reverse	1. Check whether cables are reversed (whether Grid cable is connected to the Backup side). 2. Restart system, if error still exists, please call the service center.
100144	Grid Load Reverse	1. Check whether the L cable is connected to the Grounding. 2. Restart system, if error still exists, please call the service center.
100160	LPE Reverse	Restart system to see if the fault still exists. If still exists, please call the service center.
100161	SW Consistency	Perform the remote upgrading again and ensure that the version of CPU1 and CPU2 upgrade files is the same.
100162	N-N Reverse Lost	1. The system installed in Australia needs to check whether N-N is short-circuited. 2. If not in Australia, set the safety standard correctly. 3. Restart system, if error still exists, please call the service center.
1001220	inv_line_short	1. Check whether the load is short-circuited connected. 2. Restart system, if error still exists, please call the service center.

Venus HVT Series & Venus HV5-01

Error No.	Error description	Troubleshooting
110000	Bat over-voltage alarm	Check that the actual battery voltage is 10V higher than the battery charging cut off voltage.
110001	Bat under-voltage alarm	Check that the actual battery voltage is 10V higher than the battery discharging cut-off voltage.
110002	output_overload_ alarm	Check whether the load exceeds 0.95 of the rated power.
110019	Bat Reverse	Check whether battery positive and negative connections are reversed.
110021	Grid Loss	1. Wait for the Grid power return to normal. 2. If Grid is normal, check the connections to the grid terminal. 3. Restart system, if error still exists, please call the service center.
110022	Grid Volt	
110023	Grid Freq	
110024	10min Grid Volt	
110026	PE Loss	1. Check whether the grounding cable is disconected. 2. Restart system(This warning does not affect system running).
110027	LN Reverse	1. Check whether the Grid L/N cable are reversed connected. 2. Restart system, if error still exists, please call the service center.
110028	Low Temperature	1. Wait for the temperature to return to normal (above -20℃). 2. If temperature is normal, restart system, if error still exists, please call the service center.
110029	GFCI	1. Check whether there is leakage current in system cables. 2. If no abnormal connection, but still error frequently, please call the service center.
110033	Island	Normal protection mode, no action is required.
110034	Fan Abnormal	Restart system, if error still exists, please call the service center.

Error No.	Error description	Troubleshooting
110035	N Loss	1. Check whether the Grid N cable is disconnected. 2. Restart system, if error still exists, please call the service center.
110039	Machine Type	Restart system, if error still exists, please call the service center.
110040	Inv Volt Low	1. Check whether the Backup load power exceeds the inverter rated power. 2. Restart system, if error still exists, please call the service center.
110047	Bus Under	1. Wait for the Grid power restore to normal. 2. Charge the battery and wait until the battery restore.
110051	Reduce PBy Over Freq	Wait for the Grid power restore to normal.
110052	Reduce PBy Over Volt	Wait for the Grid power restore to normal.
110053	Reduce PBy Over Temp	Wait for the inverter temperature returns to normal.
110054	HVRT	Wait for the Grid power restore to normal.
110055	LVRT	Wait for the Grid power restore to normal
110056	Bat Open	Check the battery circuit breaker and the battery circuit breaker on the inverter are on.
110060	EMS CAN ALARM	Restart system, if error still exists, please call the service center.
110061	EMS SCI ALARM	Restart system, if error still exists, please call the service center.
110074	PV Over Volt	1. Check whether the configured voltage of the PV panel is greater than 950V(Use a multimeter to measure the PV terminal voltage). 2. Restart system, if error still exists, please call the service center.

Venus HVT Series & Venus HV5-01

Error No.	Error description	Troubleshooting
110082	N-N Reverse Lost	1. The system installed in Australia needs to check whether N-N is short-circuited. 2. If not in Australia, set the safety standard cor rectly. 3. Restart system, if error still exists, please call the service center.
110083	bat_num_abnormal	Restart system, if error still exists, please call the service center.
34	parallel_host_lost	Host inverter communication lost in parallel system.
35	parallel_form_lost	Slave inverter communication lost in parallel system.
41	parallel_ems_ver_dif- ferent	Inverter EMS software version mismatch in paral- lel system.
42	parallel_dsp_ver_dif- ferent	Inverter DSP software version mismatch in parallel system.
43	parallel_inv_sub_dif- ferent	Inverter model mismatch in parallel system.

6.2.2 Battery error troubleshooting

No.	Warning Messages	Description	Troubleshooting
1	Over voltage	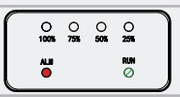	Please contact your dealer or technical support.
2	Under voltage	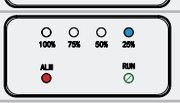	Please contact your dealer or technical support.
3	Over temperature	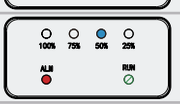	Wait till the temperature of cell goes back to the normal state.
4	Under temperature		Wait till the temperature of cell goes back to the normal state.
5	Over current	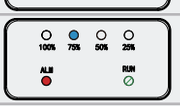	Please contact your dealer or technical support.
6	PCB over temperature	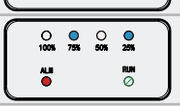	Wait till the temperature of cell goes back to the normal state.
7	Precharge error		Please contact your dealer or technical support.
8	Relay error		Please contact your dealer or technical support.
9	Self-test failure		Please contact your dealer or technical support.

07 UNINSTALLATION & RETURN

7.1 Removing the product

Procedure

- Step 1: Power off the energy storage system by following instructions in Chapter 5.7. Powering Off the System.
- Step 2: Disconnect all cables from the product, including communication cables, PV power cables, battery power cables, AC cables, and PE cables.
- Step 3: Remove the WiFi module.
- Step 4: Remove the product from the wall bracket. Remove the expansion battery from the wall bracket.
- Step 5: Remove the wall brackets

7.2 Packing the product

If the original packaging is available, put the product inside it and then seal it using adhesive tape.
If the original packaging is not available, put the product inside a suitable cardboard box and seal it properly.

7.3 Packing the product

- If the product service life expires, dispose of it according to the local disposal rules for electrical equipment and electronic component waste.
- Dispose of the packaging and replaced parts according to the rules at the installa- on site where the device is installed.
- Do not dispose the product with normal domesyic waste.

08 What to do in case of an emergency

In the event of any threat to health or safety, always begin with these two steps before addressing the other suggestions below:
1. Immediately contact the fire department or other relevant emergency response team.
2. Notify all people who might be affected and ensure that they can evacuate the area.

> ⚠ **WARNING**
>
> Only perform the suggested actions below, if it is safe to do so.

8.1 In case of fire

The battery module may catch fire when heated about 150°C.
1. Press the Switch button (SW) to be OFF.
2. Turn off the breaker to the inverter.
3. Acceptable fire extinguisher types are CO2 and ABC.

8.2 In case of flooding

1. Stay out of the water if any part of the battery module or any wiring is submerged.
2. Press the Switch button (SW) to be OFF.
3. Turn off the breaker to the inverter.
4. If possible, protect the system by finding and stopping the source of the water, and pumping water away.
5. Let the area dry completely before use.

8.3 In case of unusual noises

1. Press the Switch button (SW) to be OFF.
2. Turn off the breaker to the inverter.
3. Ensure that nothing is inside the case, then restart the system and if there are still unusual noises, please contact your dealer or technical support.

8.4 In case of unusual smell or smoke

1. Please ensure your safety first, then contact your dealer or fire department based on the actual situation to move to the next step.
2. Press the Switch button (SW) to be OFF.
3. Turn off the breaker to the inverter.
4. Ensure nothing is in contact with the battery system.

Venus HVT Series & Venus HV5-01

Appendix 1: System overview

Please see the following wiring diagram of the system principle, divided into European, Australian and other regions.

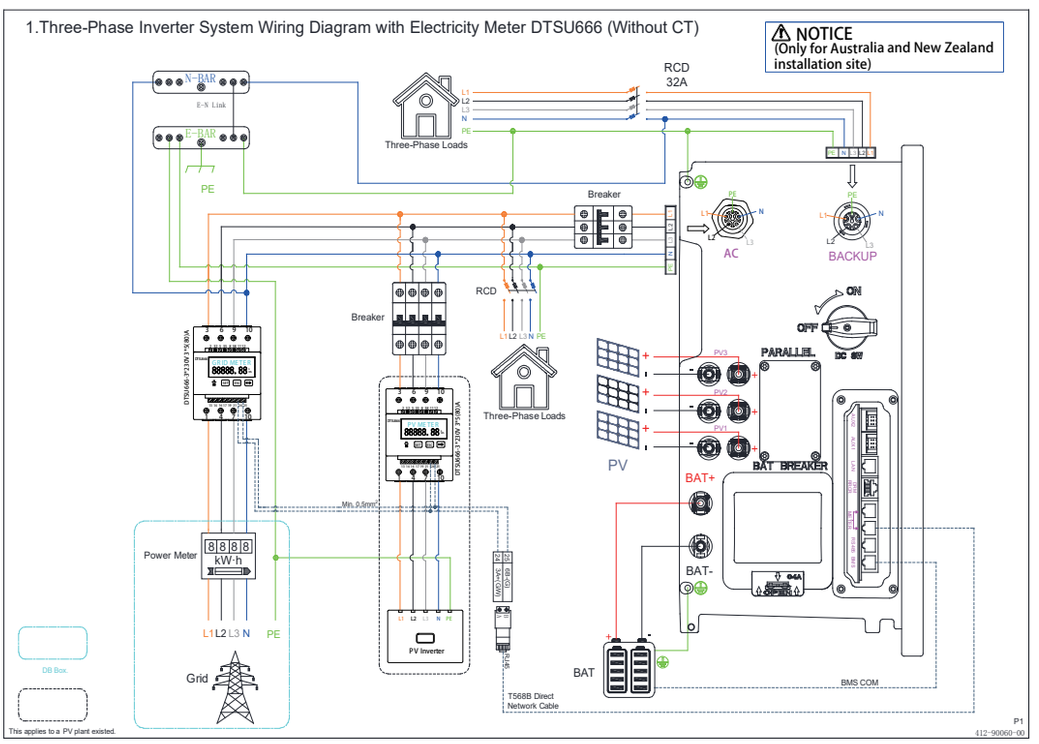

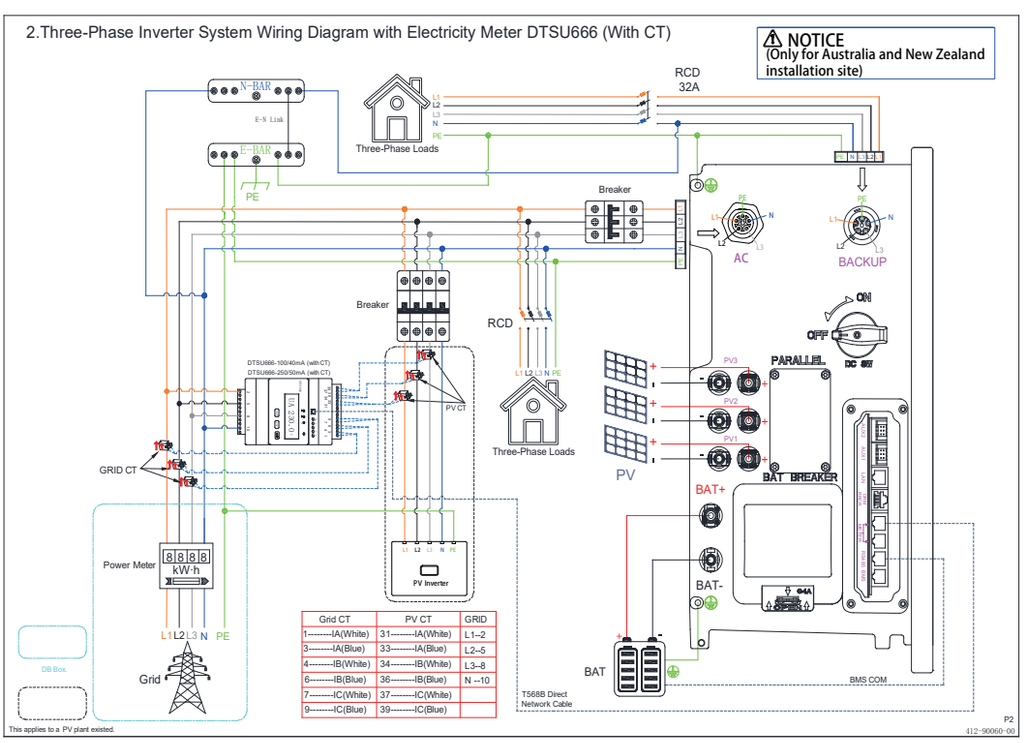

Venus HVT Series & Venus HV5-01

1.Three-Phase Inverter System Wiring Diagram with Electricity Meter DTSU666 (Without CT)

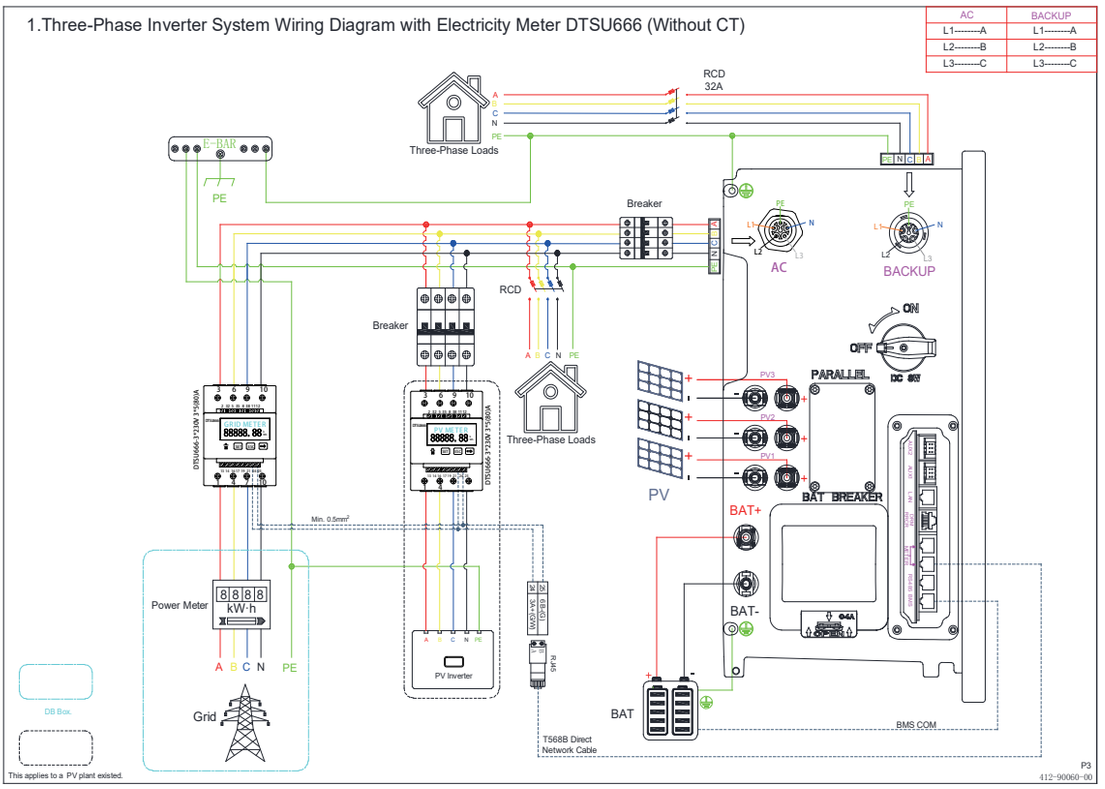

2.Three-Phase Inverter System Wiring Diagram with Electricity Meter DTSU666 (With CT)

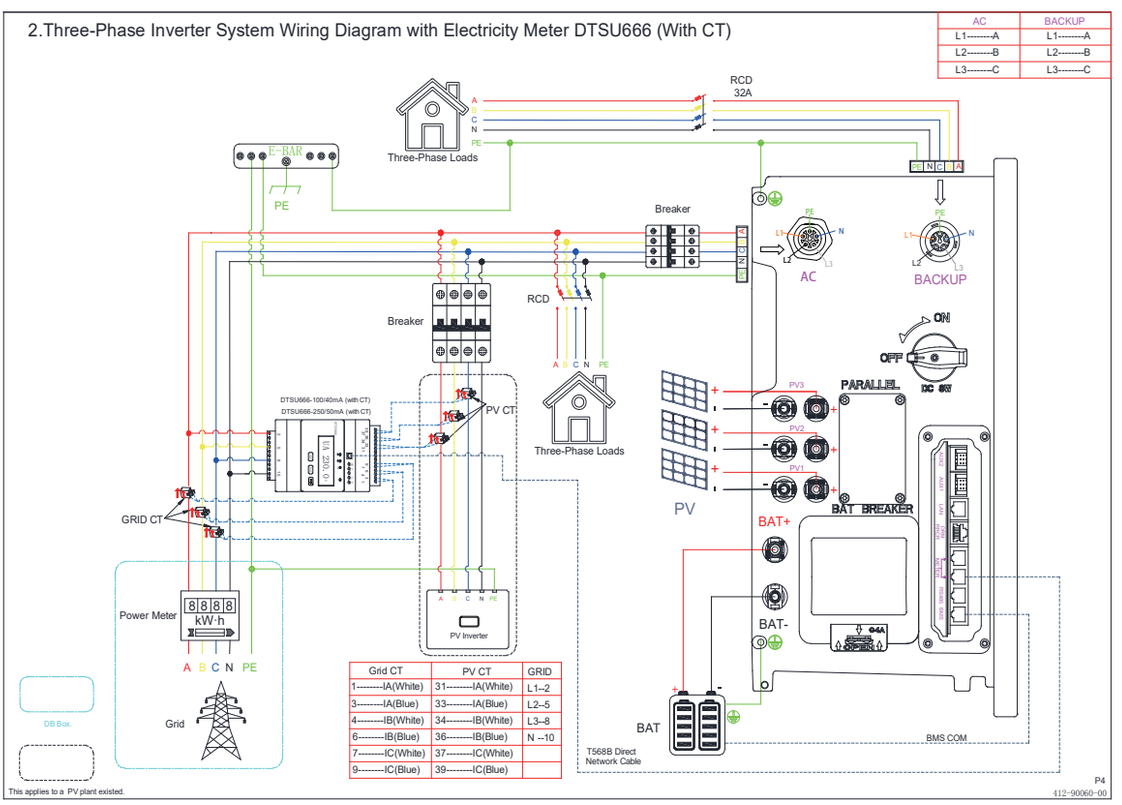

Grid CT	PV CT	GRID
1---------IA(White)	31---------IA(White)	L1--2
3---------IA(Blue)	33---------IA(Blue)	L2--5
4---------IB(White)	34---------IB(White)	L3--8
6---------IB(Blue)	36---------IB(Blue)	N --10
7---------IC(White)	37---------IC(White)	
9---------IC(Blue)	39---------IC(Blue)	

Venus HVT Series & Venus HV5-01

1.Three-Phase Inverter System Wiring Diagram with Electricity Meter DTSU666 (Without CT)(EU)

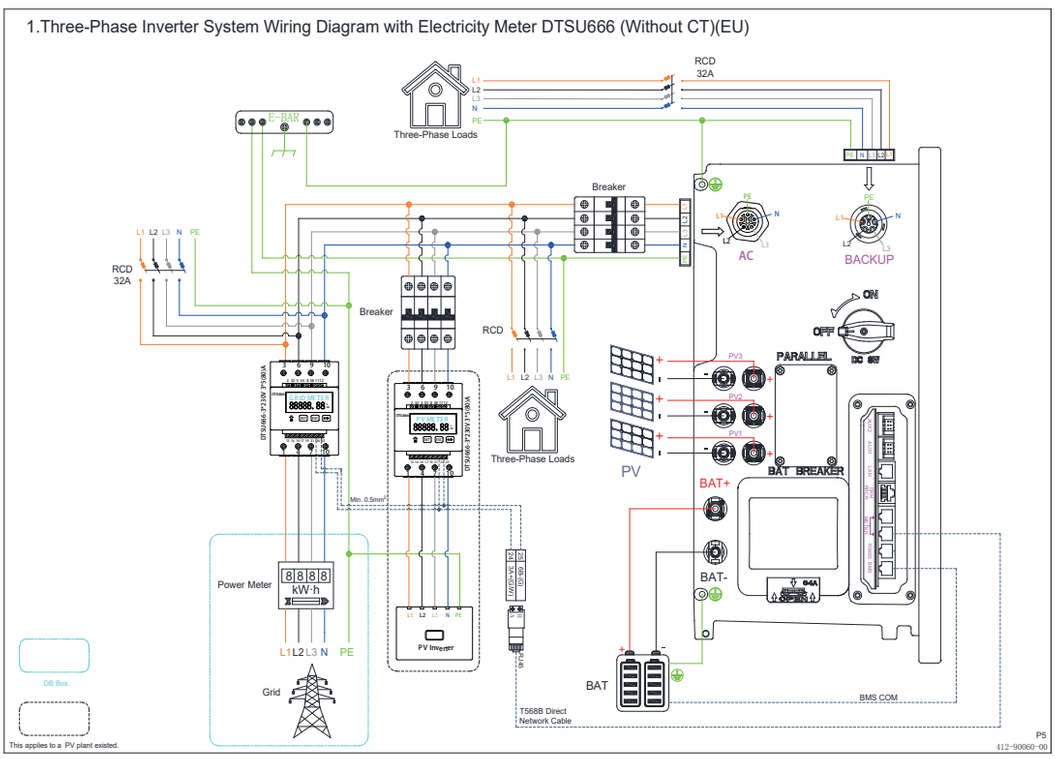

2.Three-Phase Inverter System Wiring Diagram with Electricity Meter DTSU666 (With CT)(EU)

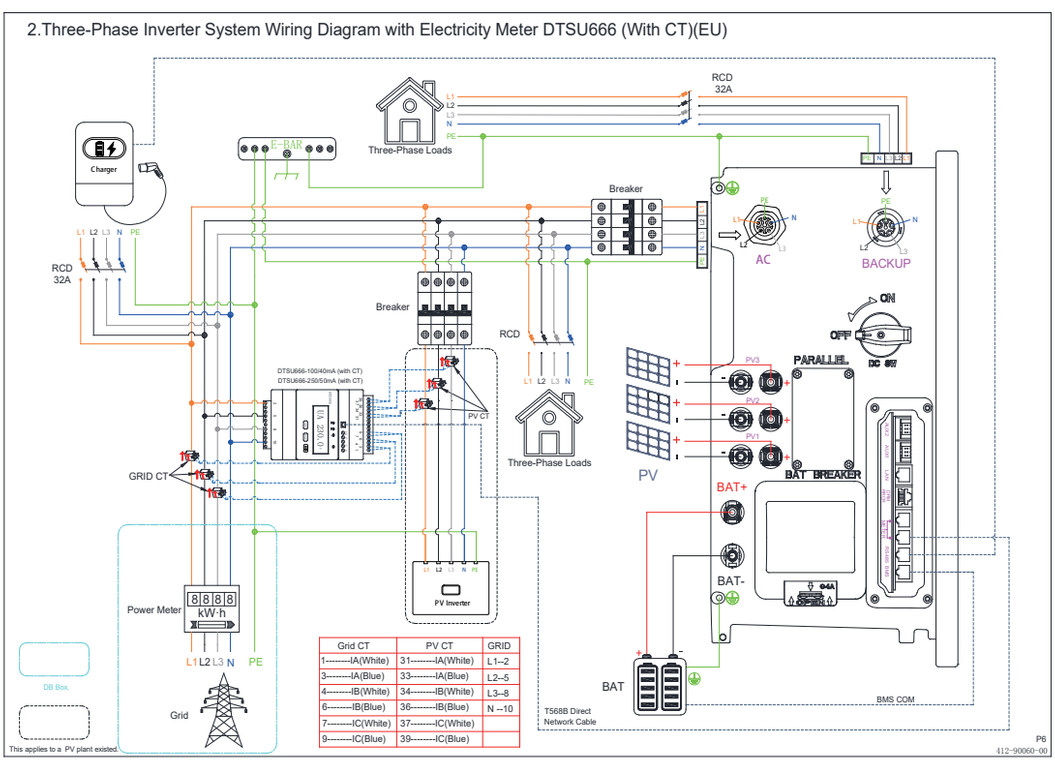

Grid CT	PV CT	GRID
1--------IA(White)	31--------IA(White)	L1--2
3--------IA(Blue)	33--------IA(Blue)	L2--5
4--------IB(White)	34--------IB(White)	L3--8
6--------IB(Blue)	36--------IB(Blue)	N --10
7--------IC(White)	37--------IC(White)	
9--------IC(Blue)	39--------IC(Blue)	

Appendix 2: Regional application standard

Please check with your local grid company and choose the correspond Regional Application Standard, the power quality modes Volt-var and Volt-Watt will be running automatically. (Only for regions with AS/NZS 4777.2 safety regulations).

Electric Company	Electric Company
Australia A	N/A
Australia B	N/A
Australia C	N/A
New Zealand	N/A
Vector	New Zealand Vector

Your project.
Our support.

SALES & SERVICE

Wayton Energy Tech Co., Ltd.
tech@waytonenergy.com
www.waytonenergy.com

For model selection, quotations and service coordination, contact WAYTON.
Manufacturer technical specifications and applicable warranty terms remain unchanged.