Consistent Energy Storage Concept CESC

QUICK INSTALLATION GUIDE

Single Phase Hybrid Inverter Saturn 4K / 4.6K/5K/5.5K/6K LVS

Scanning for user manual

01 Product Overview

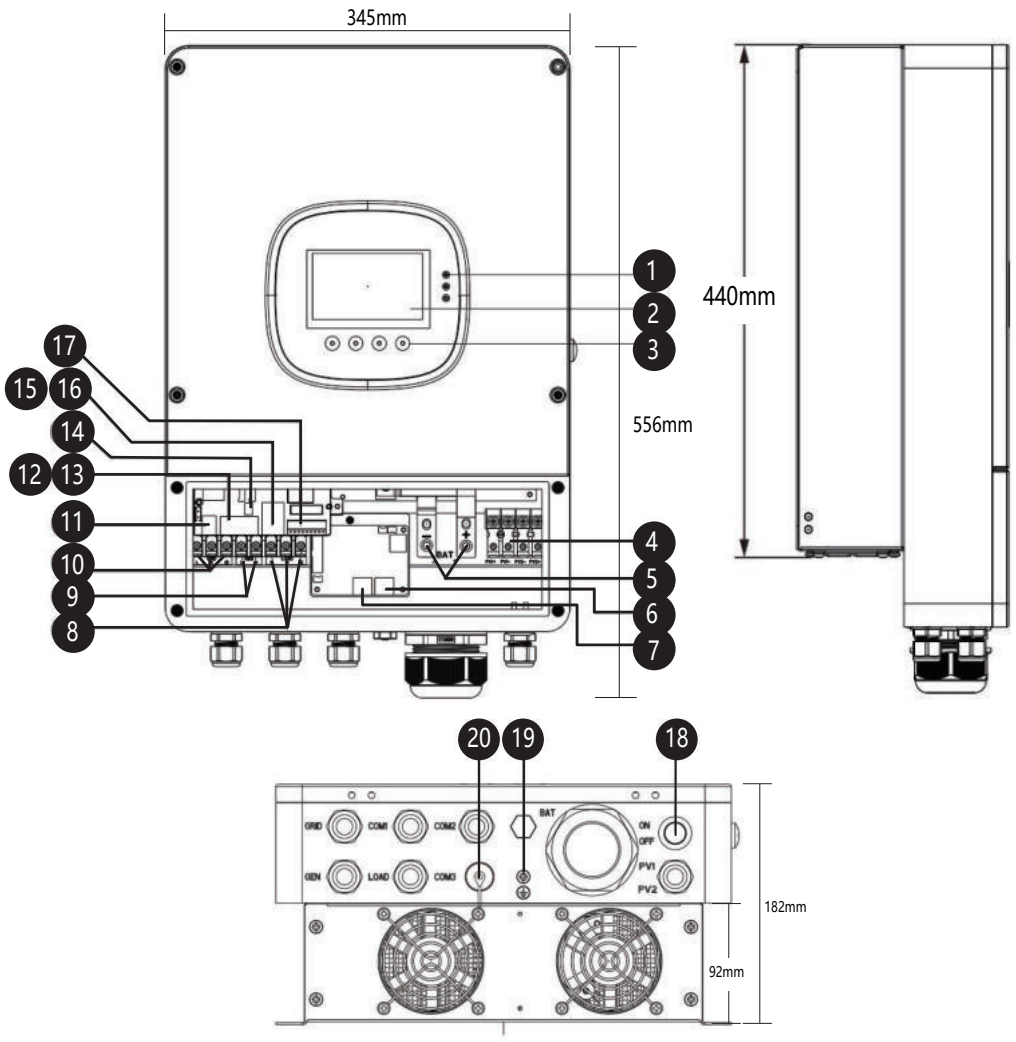

1	LED Indicatorst	8	LOAD terminals	15	WIFI port
2	LCD screen	9	Generator terminals	16	USB-A port
3	keys	10	Grid terminals	17	Dry contact
4	PV1/PV2 terminals	11	USB-B port	18	ON/OFF switch
5	Battery terminal	12	RS485/CAN port	19	Grounding screw
6	Parallel communication A port	13	DRMS port	20	WIFI port 2
7	Parallel communication B port	14	DIP switch		

02 Attachments

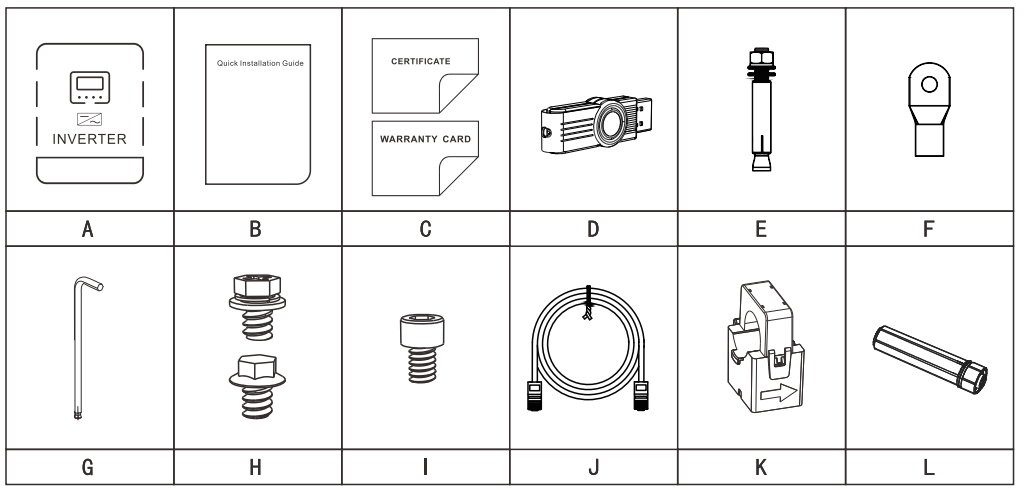

NO.	Items	Qty
A	Inverter	1
B	Quick Installation Guide	1
C	Certificate/Warranty card	1
D	Flash drive	1
E	Expansion screws M6*60	4
F	SC35-6 terminal block	2
G	L-shaped hex wrench	1
H	Phillips combination screws/Flange screws	2
I	Hexagon socket screw M5*18mm	1
J	Parallel communication line	1
K	External CT	1
L	Wifi port	1

03 Mounting procedure

1 Installation Space Requirements

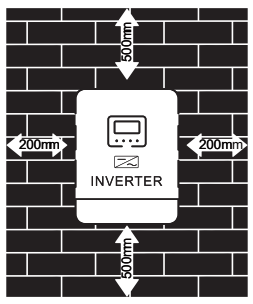

Inverter must be placed in the correct position on a solid flat wall surface at least 500mm above the ground. Inverter between batteries should be at least 200mm.

2 Installation Location Selection

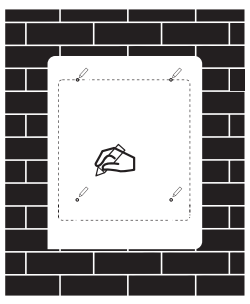

Put the installation auxiliary board in the proper position, and mark the place where the holes need to be punched.

3 Install Expansion Bolts

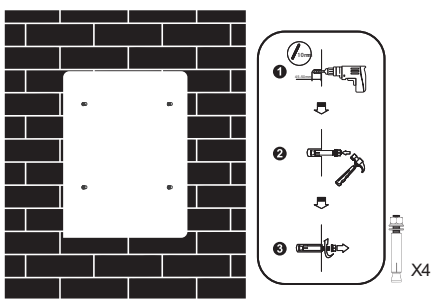

Drill 4 holes, φ10-12, depth 45~50mm according to the hole location.Drive the expansion screw into the above holes and tighten the nut.

4 Align the hole bits

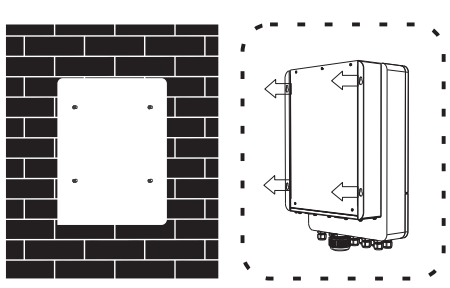

Align the four holes of the inverter to the corresponding screw positions, and then place them.

5 Install Inverter

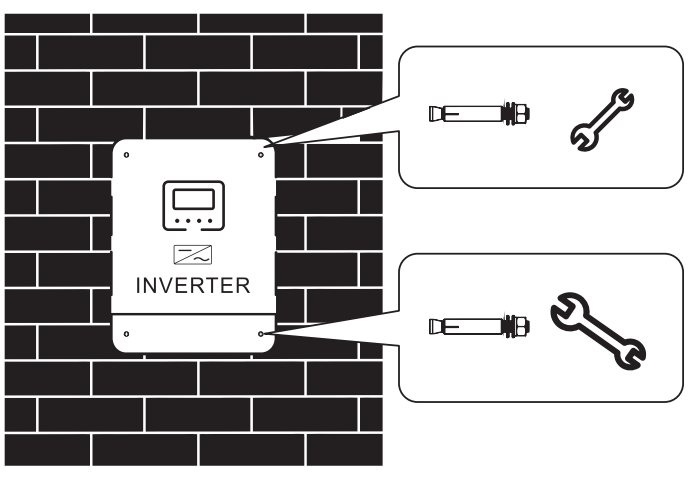

Tighten the corresponding screws to ensure a firm and secure fit.

⚠ NOTICE

Saturn series can be used outdoors (protection class IP65).
Please consider the followings before selecting the location:

- Choose the solid wall to install the inverter.
- Mount the inverter at eye level.
- Adequate heat dissipation space must be provided for the inverter.
- The ambient temperature should be between-25~60℃ (-13~140°F) to ensure optimal operation.

04 Cable connection

1 Battery Connection

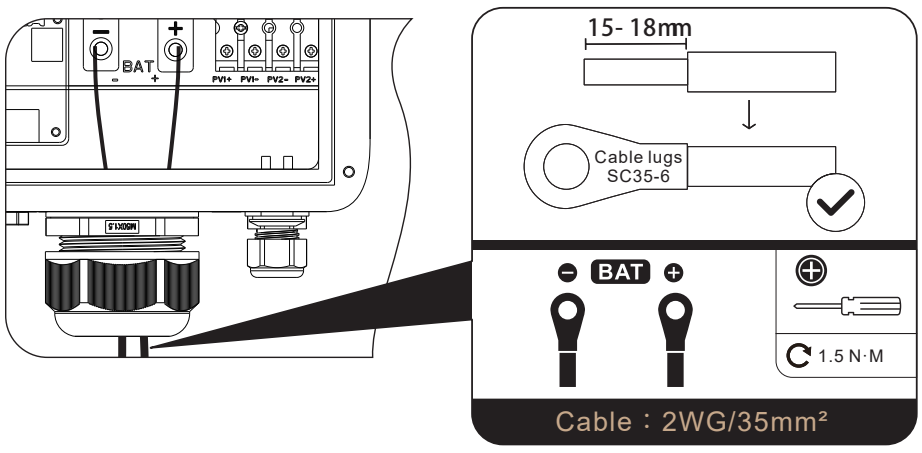

2 AC input

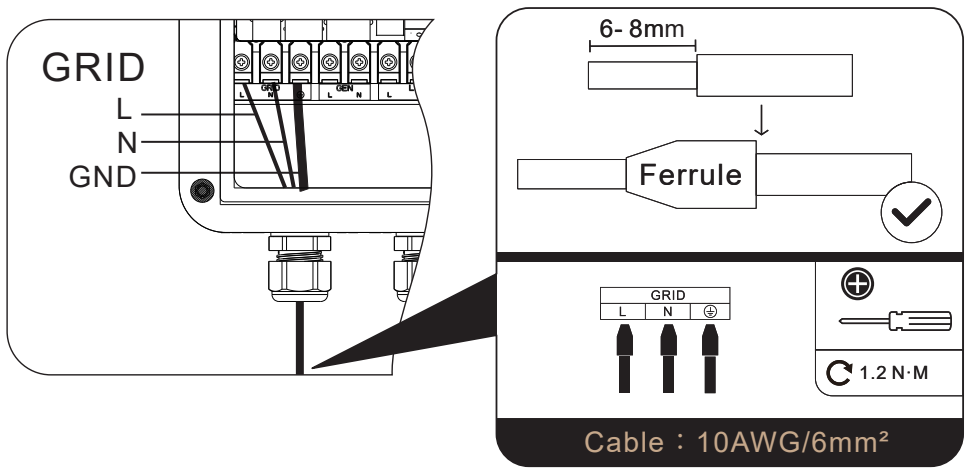

3 Output connection

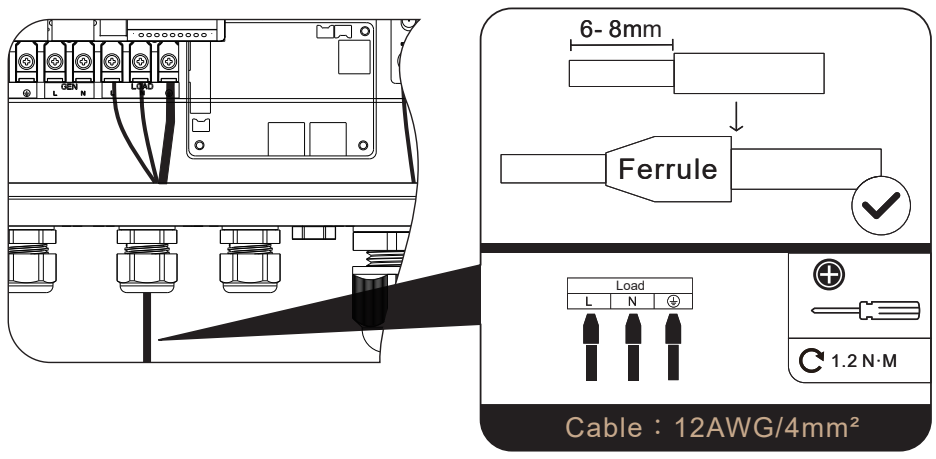

4 Generator connection

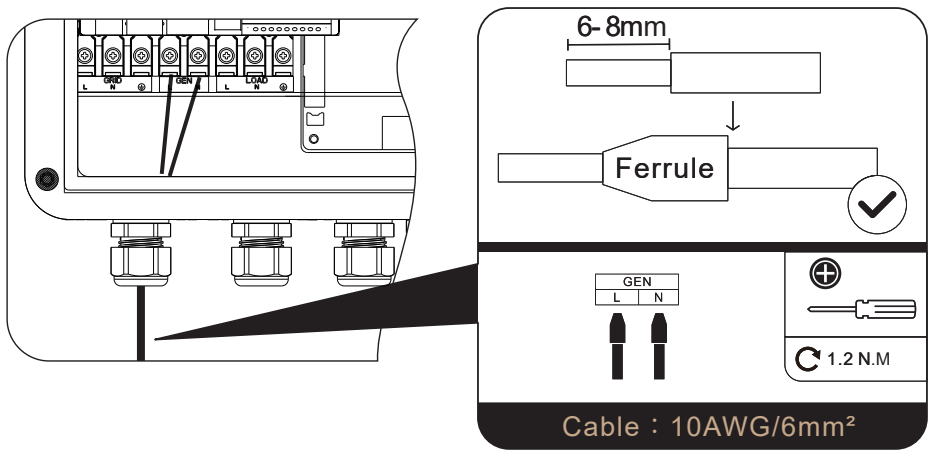

5 PV connection

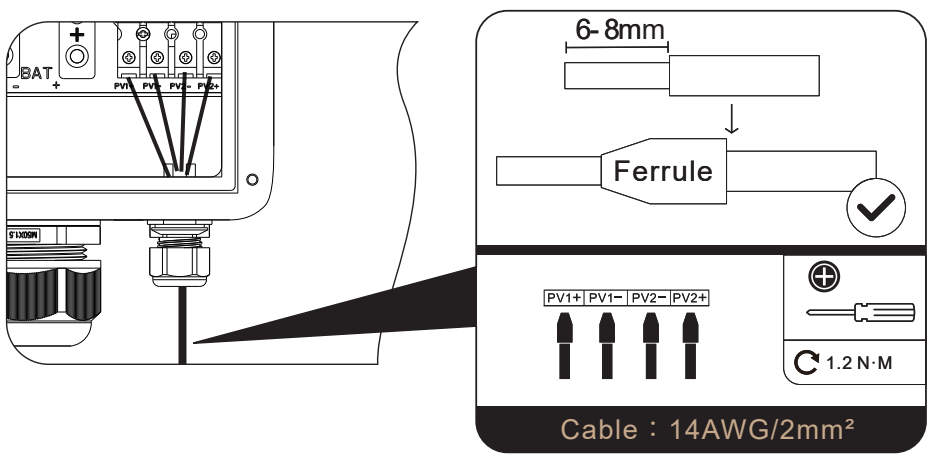

6 Grounding connection

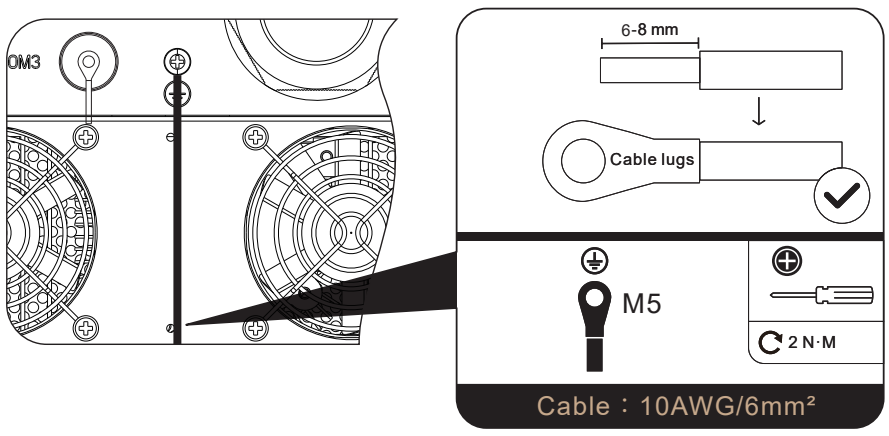

05 Wi-Fi port (Opitional)

1 The WIFI port is used to connect to the Wi-Fi/GPRS data acquisition module

WIFI port A

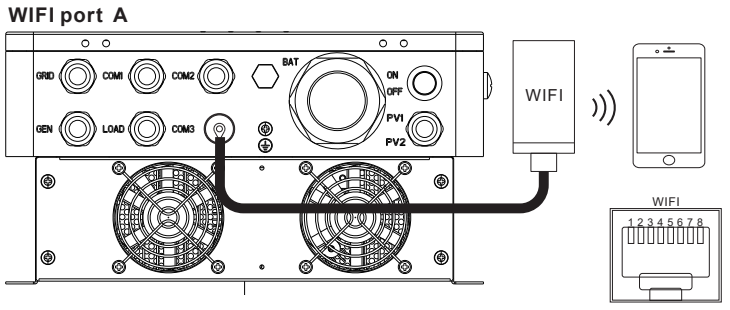

Which allows the user to view the operating status and parameters of the inverter via the mobile phone APP.The Wi-Fi/GPRS data acquisition module need to be purchased separately.
It can be operated in detail according to the module manual.

WIFI port B (RJ45 port)

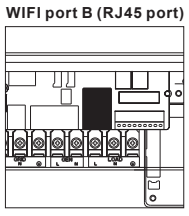

RJ45	Definition
Pin1	5V
Pin2	GND
Pin3	/
Pin4	/
Pin5	/
Pin6	/
Pin7	RS485- A
Pin8	RS485- B

2 CT Connection

