QUICK INSTALLATION GUIDE

Three Phase Hybrid Inverter Saturn 8/ 10/12K LVT

Scanning for user manual

01 Product Overview

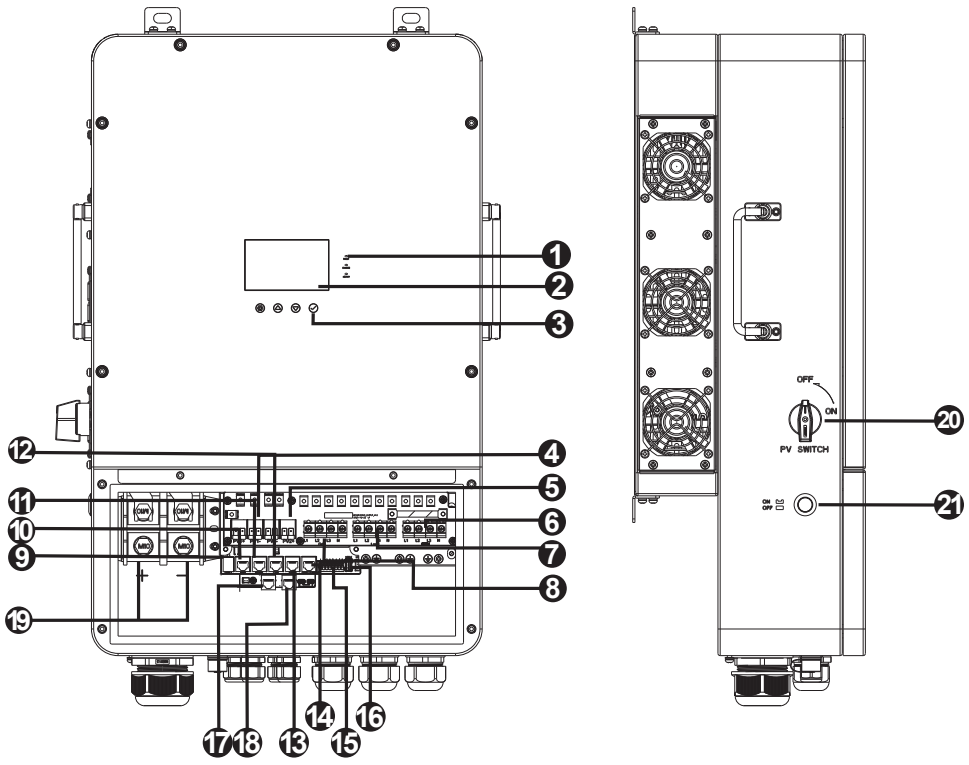

1	LED indicator	8	Grid terminals（L1+L2+L3+N)	15	Dry contact
2	LCD screen	9	USB-1	16	USB-2
3	Physical key	10	WIFI	17	Parallel communication B port
4	PV1 terminals	11	485 port	18	Parallel communication A port
5	PV2 terminals	12	CAN port	19	Battery terminal
6	Generator terminals（L1+L2+L3+N)	13	DRMS	20	PV circuit breaker
7	Load terminals（L1+L2+L3+N)	14	Grid current(CT)	21	ON/OFF switch

02 Attachments

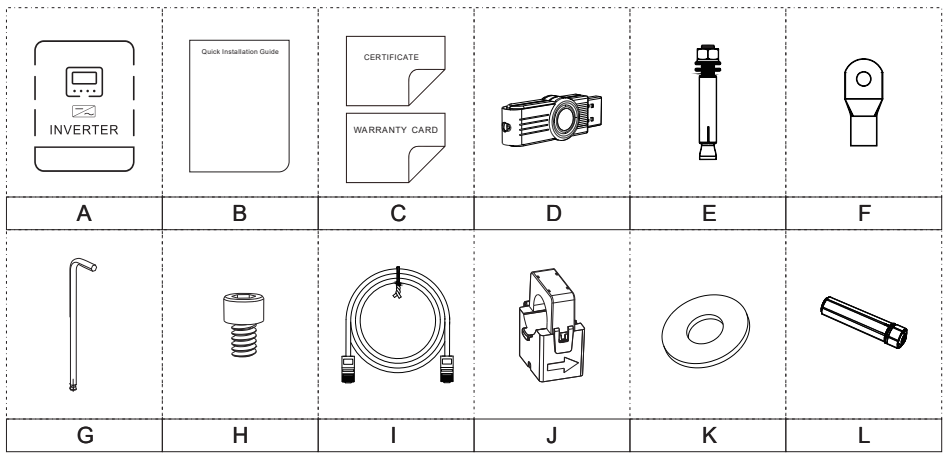

NO.	Items	Qty
A	Inverter	1
B	Quick Installation Guide	1
C	Certificate / Warranty card	1
D	Flash drive	1
E	Expansion screws M8*60	4
F	SC70-10 terminal block	2
G	L-shaped hex wrench	1
H	Hexagon socket screw	1
I	Parallel communication line	1
J	External CT	1
K	M8 flat gasket	5
L	Wifi port	1

03 Mounting procedure

1 Installation Space Requirements

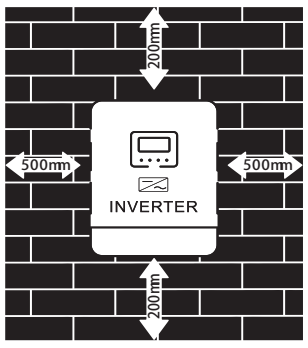

Inverter must be placed in the correct position on a solid flat wall surface at least 500mm above the ground. Inverter between batteries should be at least 200mm.

2 Installation Location Selection

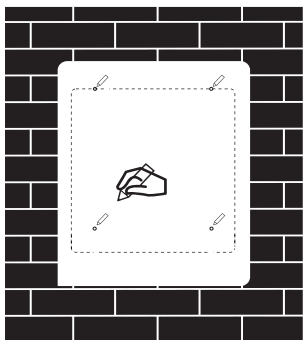

Put the installation auxiliary board in the proper position, and mark the place where the holes need to be punched.

3 Install Expansion Bolts

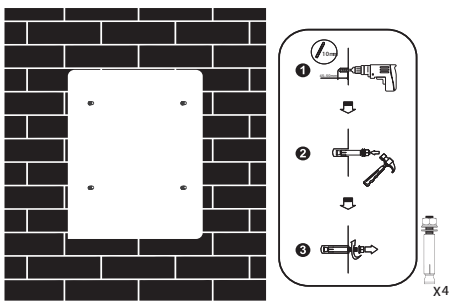

Drill 4 holes, φ10-12, depth 45~50mm according to the hole location.Drive the expansion screw into the above holes and tighten the nut.

4 Align the hole bits

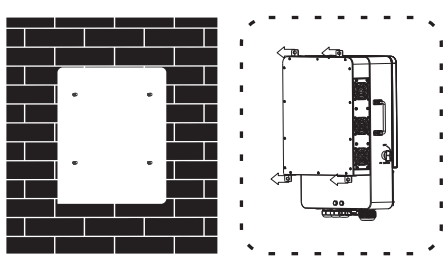

Align the four holes of the inverter to the corresponding screw positions, and then place them.

5 Install Inverter

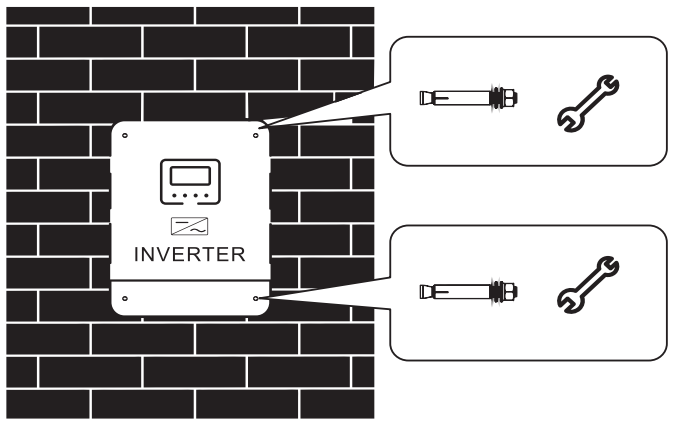

Tighten the corresponding screws to ensure a firm and secure fit.

NOTICE

Saturn series can be used outdoors (protection class IP65).
Please consider the followings before selecting the location:

- Choose the solid wall to install the inverter.
- Mount the inverter at eye level.
- Adequate heat dissipation space must be provided for the inverter.
- The ambient temperature should be between-25~60℃（-13~140°F) to ensure optimal operation.

04 Cable connection

1 Battery Connection

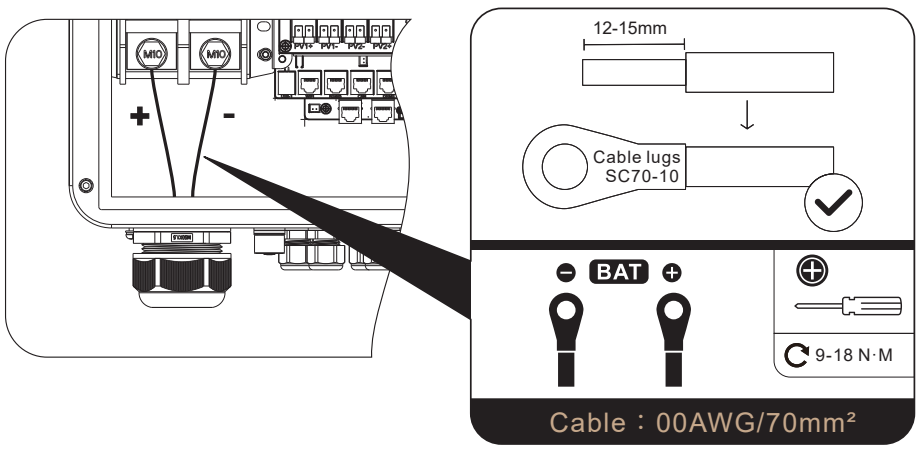

2 AC input

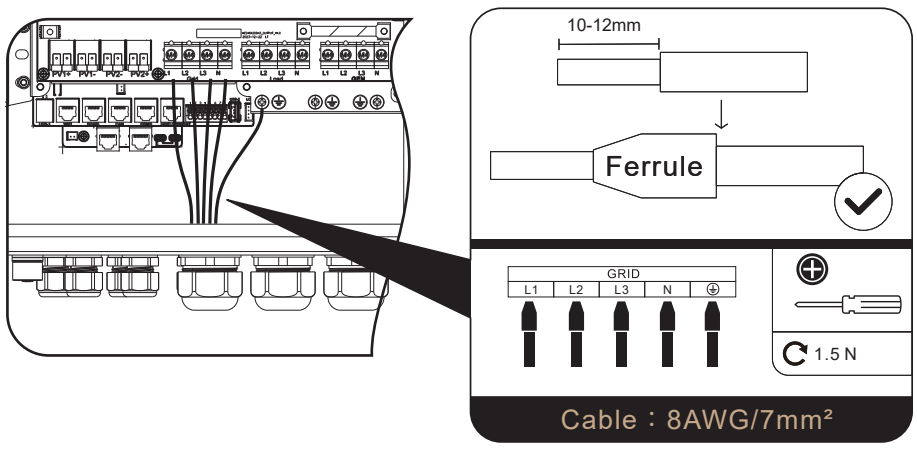

3 Output connection

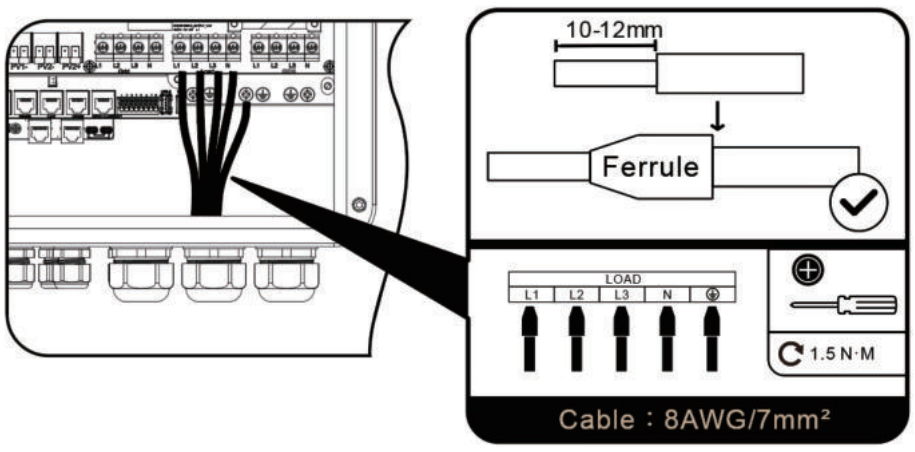

4 Generator connection

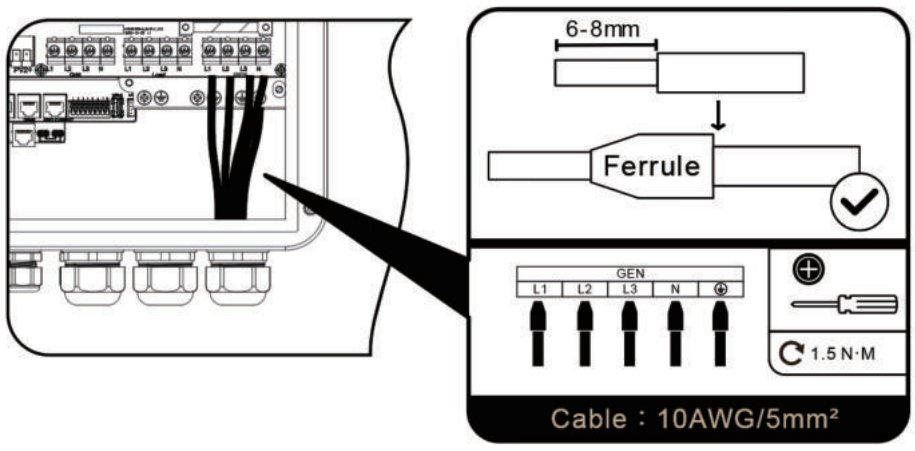

5 PV connection

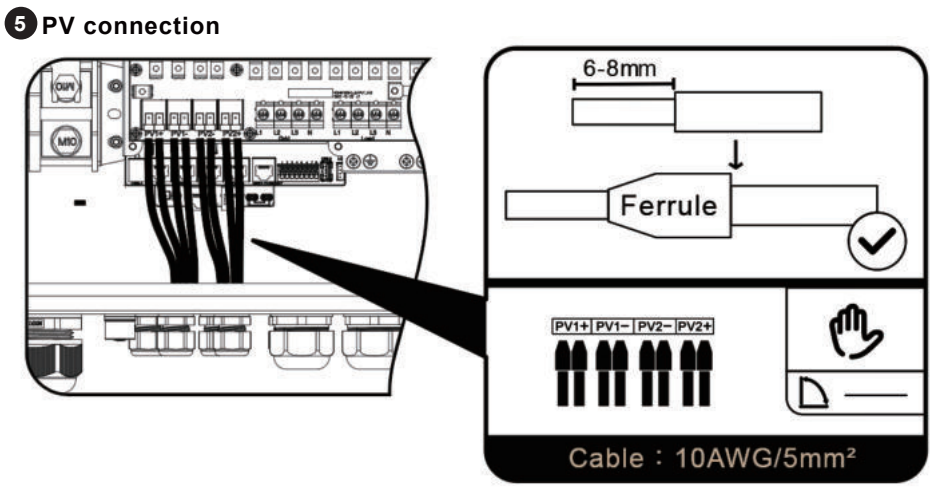

6 Grounding connection

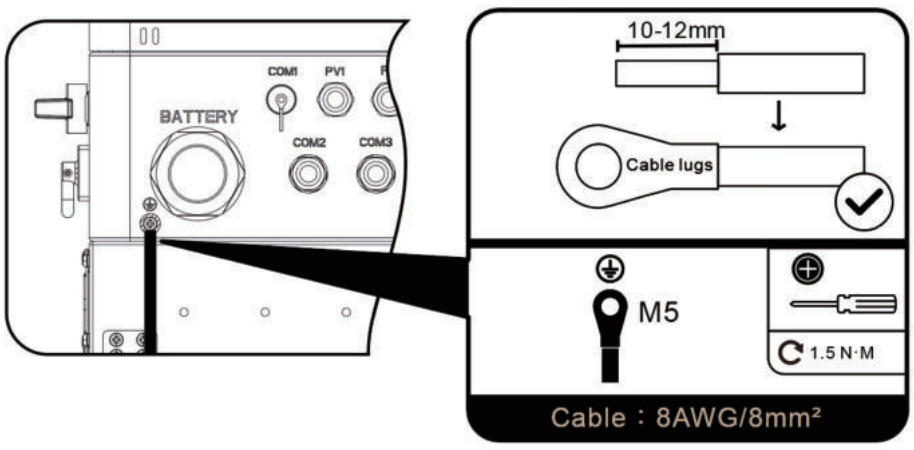

05 Wi-Fi port (Opitional)

1 The WIFI port is used to connect to the Wi-Fi/GPRS data acquisition module

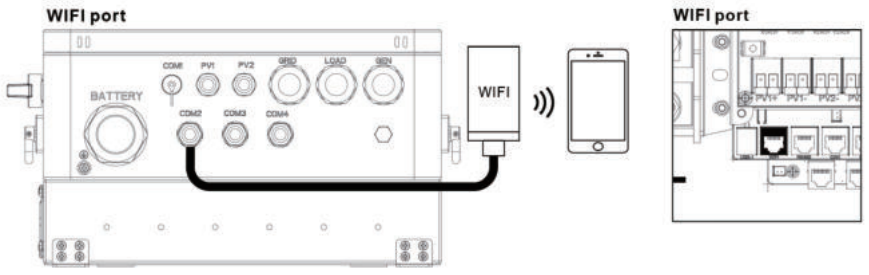

Which allows the user to view the operating status and parameters of the inverter via the mobile phone APP.
The Wi-Fi/GPRS data acquisition module need to be purchased separately.
It can be operated in detail according to the module manual.



RJ45	Definition
Pin1	5V
Pin2	GND
Pin3	/
Pin4	/
Pin5	/
Pin6	/
Pin7	RS485-A
Pin8	RS485-B

2 CT Connection

