Saturn Single Phase Hybrid Inverter



USER MANUAL

Saturn 8K LVS Saturn 10K LVS
Saturn 12K LVS

USER MANUAL

Model:

Saturn 8-12K LVS series

Contents

01 Safety 02
1.1 How to use this manual 02
1.2 Symbols in this manual 02
1.3 Safety instructions 02

02 Production Instructions 03
2.1 Instructions 03
2.2 Features 03
2.3 System connection diagram 04
2.4 Production Overview 05
2.5 Dimension drawing 06

03 Installation 07
3.1 Installation contents 07
3.2 Tools & Instruments prepared (not supplied) 08
3.3 Select the mount location 09
3.4 Mount the inverter 10
3.5 Remove the terminal cover & anti insect net 10

04 Connection 11
4.1 Single-phase output 11
4.2 Cable & circuit breaker requirement 13
4.3 GRID & LOAD & GEN connection 15
4.4 Battery Connection 15
4.5 PV connection 16
4.6 Dry contact connection 17
4.7 Grounding connection 17
4.8 Final assembly 18
4.9 Start up the inverter 18
4.9.1 Introduction 18
4.9.2 Precautions for connecting the parallel connecting lines 18
4.9.3 Schematic diagram of parallel connection in single phase 19
4.9.4 Schematic diagram of parallel connection in three phase 23

05 Operation 28
5.1 Operation and display panel 28
5.2 Setting 32
5.3 Time-slot charging/discharging function 44
5.4 Battery parameter 45

06 Communication 47
6.1 Overview 47
6.2 USB-B port 48
6.3 WIFI port 48
6.4 CAN port 49
6.5 RS485 port 49
6.6 USB-A port 49
6.7 External CT port 50
6.8 Dry contact 51

07 Fault and Remedy 52
7.1 Fault code 52
7.2 Troubleshooting 55

08 Protection and Maintenance 57
8.1 Protection function 57
8.2 Maintenance 59

09 Datasheet 60

All information in this manual is subject to copyright and other intellectual property rights of CESC New Energy Technology Co., Ltd. This manual should not be modified, reproduced or copied, in whole or in part. The unauthorized use without prior written permission is strictly prohibited. CESC New Energy Technology Co., Ltd. All rights reserved.

Please read this entire document carefully before installing or using the battery system. Failure to do so or to follow any of the instructions or warnings in this document can result in electrical shock, serious injury or death, can damage battery, potentially rendering it inoperable. Warranty claims are invalid, if damage is caused by human error in a manner inconsistent with the installation manual's instructions.

The information included in this manual is verified by CESC to be accurate at the time of publication. However, due to the continuous improvement of products, this manual is subject to change without prior notice.Unless otherwise specified, this manual is for operational guidance only, and all statements contained herein do not constitute any form of warranty.

The illustrations in this manual are intended to help explain operating system configurations and installation instructions. Any confusion, please contact CESC immediately for advice and clarification. Thank you for your choice and trust.

Saturn 8-12K LVS series

01 Safety

1.1 How to use this manual

- This manual contains important information、guidelines、operation and maintenance for the following products : Saturn 8K LVS, Saturn-10K-LVS, Saturn-12K-LVS
- This manual must be followed during installation, use and maintenance.

1.2 Symbols in this document

Symbols	Description
⚠ DANGER	DANGER indicates a hazardous situations which if not avoided will result in death or serious injury.
⚠ WARING	WARING indicates a hazardous situations which if not avoided could result in death or serious injury.
⚠ CAUTION	CAUTION indicates a hazardous situations which if not avoided could result in minor or moderate injury.
ⓘ NOTICE	NOTICE provide some tips on operation of products.

1.3 Safety instructions

⚠ DANGER

- This chapter contains important safety instructions. Read and keep this manual for future reference.
- Be sure to comply the local requirements and regulation to install this inverter.
- Beware of high voltage. Please turn off the switch of each power sources before and during the installation to avoid electric shock.
- For optimum operation of this inverter, please follow required specification to select appropriate cable size and necessary protective device.
- Do not connect or disconnect any connections when the inverter is working.
- Do not open the terminal cover when the inverter working.
- Make sure the inverter is well grounding.
- Never cause AC output and DC input short circuited.
- Do not disassembly this unit, for all repair and maintenance, please take it to the professional service center.
- Never charge a frozen battery.
- Please keep children away from touching or mishandling the inverter.
- Please make sure that this inverter is the only input power source for the load, do not use it in parallel with other input AC power sources to avoid damage.

02 Product Instructions

2.1 Instructions

Saturn 8-12K LVS series is a new type of solar energy storage inverter control inverter integrating solar energy storage & utility charging and energy storage, AC sine wave output. It adopts DSP control and features high response speed, reliability, and industrial standard through an advanced control algorithm.

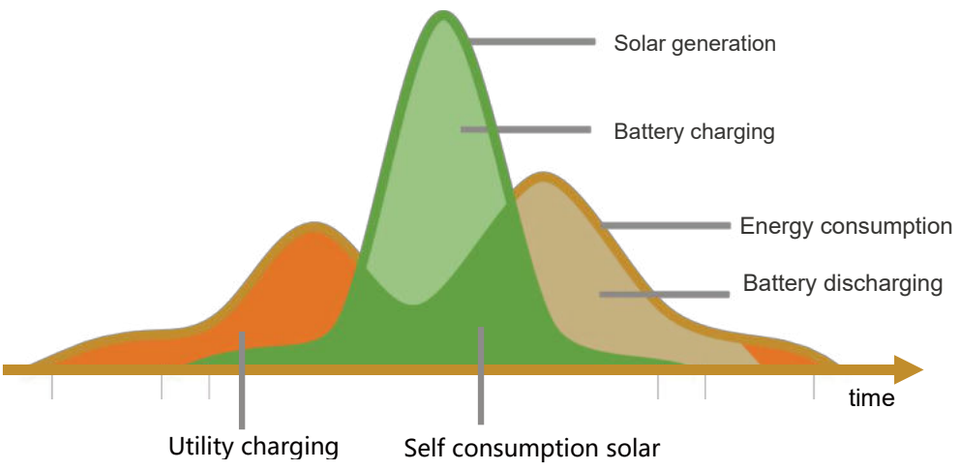

2.2 Features

- Supports lead acid battery and li-ion battery connections.
- With a dual activation function when the li-ion battery is dormant; either mains/photovoltaic power supply access can trigger the activation of the li-ion battery.
- Support single-phase pure sine wave output.
- Supports four different voltage levels of 200\208\220\230\240Vac per phase.
- Supports two solar inputs and simultaneous tracking of two solar maximum power charging/carrying capacity functions.
- Dual MPPT with 99.9% efficiency and maximum 22A current in a single circuit, perfectly adapted to high power modules.
- 2 charging modes are available: solar only, mixed mains/PV charging.
- With the time-slot charging and discharging setting function, you can set the time period for cutting in/out of mains charging and switch the time period between battery discharging and mains bypass power supply mode.
- Energy saving mode function to reduce no-load energy losses.
- With two output modes of utility bypass and inverter output, with uninterrupted power supply function.
- LCD large screen dynamic flow diagram design, easy to understand the system data and operation status.
- 360° protection with complete short circuit protection, over current protection, over under voltage protection, overload protection, backfill protection, etc.
- Support CAN, USB, and RS485 communication.

2.3 System connection diagram

The diagram below shows the system application scenario of this product. A complete system consists of the following components:

1. PV modules: converts light energy into DC energy, which can be used to charge the battery via an inverter or directly inverted into AC power to supply the load.

2. Utility grid or generator: connected to the AC input, it can supply the load and charge the battery at the same time. The system can also operate generally without the mains or generator when the battery and the PV module power the load.

3. Battery: The role of the battery is to ensure the regular power supply of the system load when the solar energy is insufficient and there is no mains power.

4. Home load: Various household and office loads can be connected, including refrigerators, lamps, televisions, fans, air conditioners, and other AC loads.

5. Inverter: The energy conversion device of the whole system.

The actual application scenario determines the specific system wiring method.

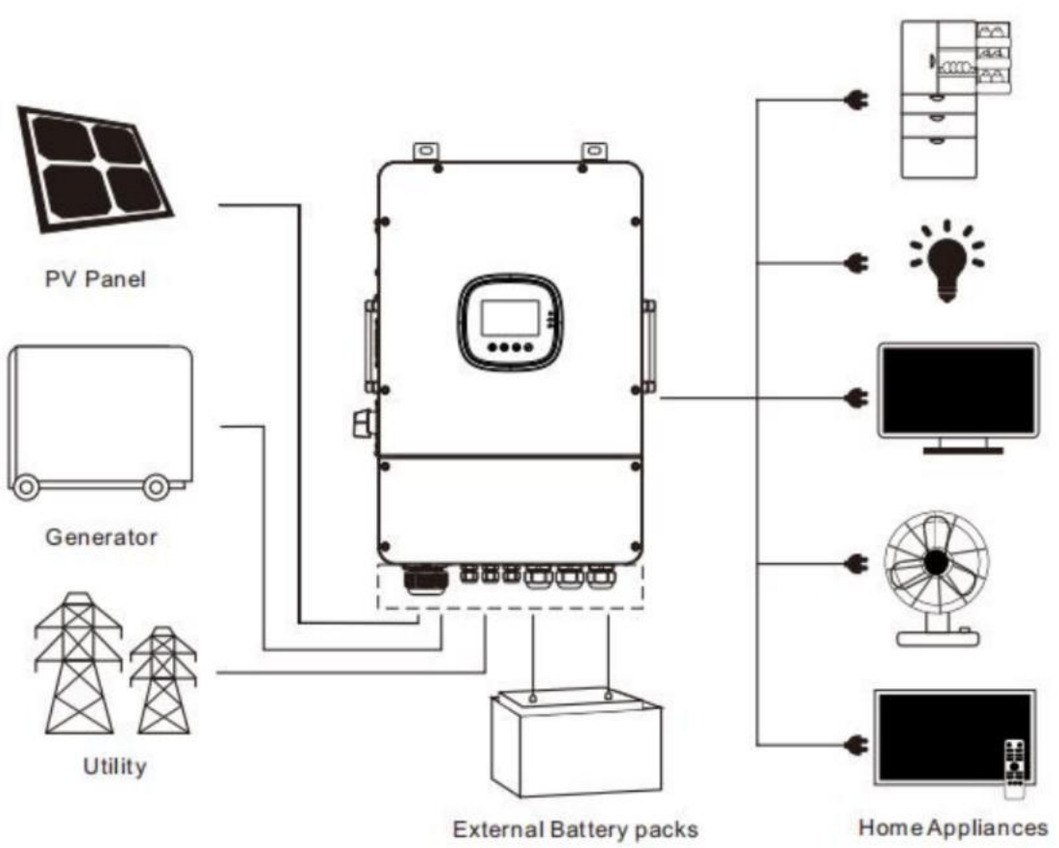

2.4 Production Overview

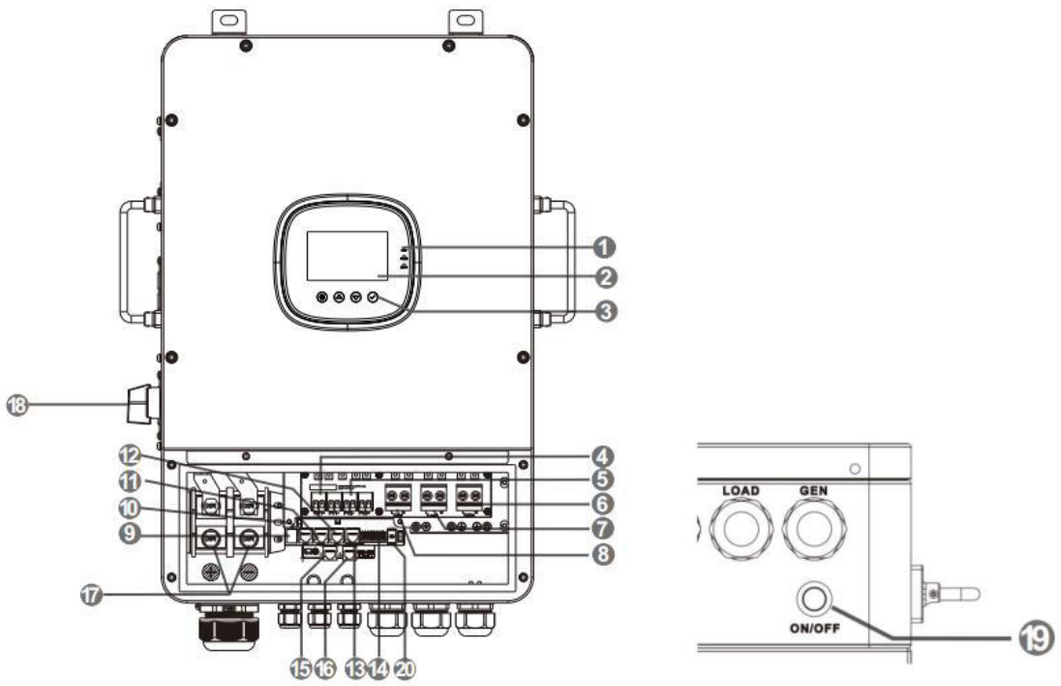

1	LED Indicators	11	RS485 port
2	LCD screen	12	CAN port
3	Touchable key	13	External CT port
4	PV1 terminals	14	Dry contact
5	PV2 terminals	15	Parallel communication B port
6	Generator terminals (L+N)	16	Parallel communication A port
7	Load terminals (L+N)	17	Battery terminal
8	Utility terminals (L+N)	18	PV circuit breaker
9	USB-B port	19	ON/OFF button switch
10	WIFI port	20	USB-A port

Saturn 8-12K LVS series

2.5 Dimension drawing

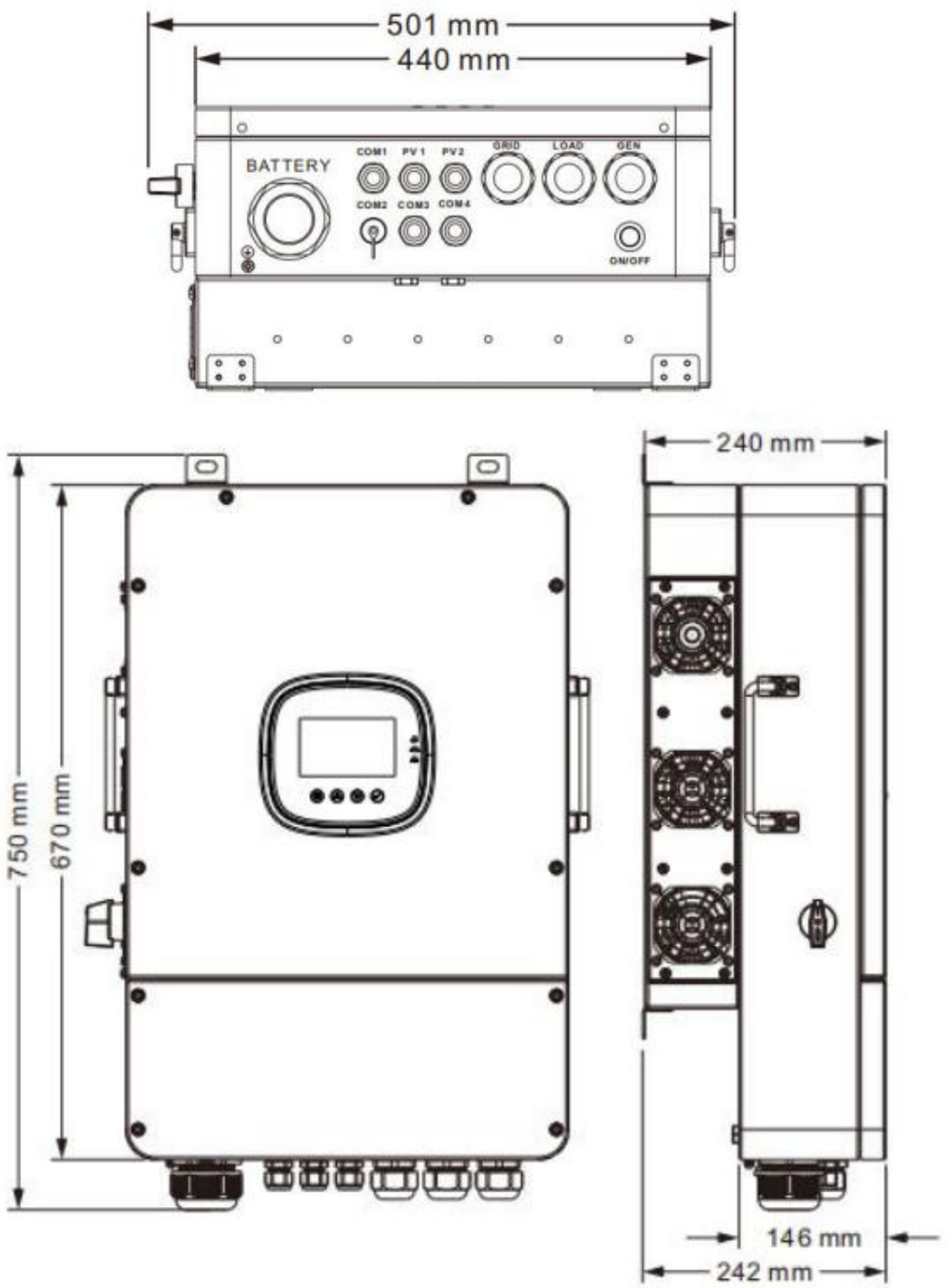

6

03 Installation

3.1 Installation contents

			
Inverter x 1	Flash drive ×1	Expansion screws M8*60 ×4	SC70-10 terminal block ×2
	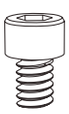	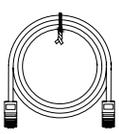	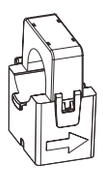
L-shaped hex wrench x 1	Hexagon socket screw x 1	Parallel communication line x 1	Extternal CT x 1
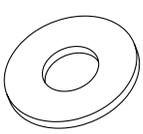	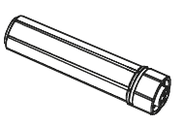	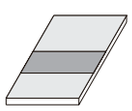	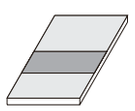
M8 flat gasket ×5	Wifi port x 1	Quick Installation Guide x 1	Certificate/ Warranty card x 1

3.2 Tools & Instruments prepared (not supplied)

The following tools shall be prepared before installation.

No.	Tools	Description	Function	Specifications
1		Percussion drill	Wall drilling	/
2		Screwdriver	Removing, installing screws and wiring	5mm&6mm
3		Hex Key Wrench	Tighten or remove bolts/nuts	10mm&13mm
4		Marking pen	Drilling mark	/
5		Gradienter	Ensure horizontal installation	/
6		Hammer Head	Drive in nails/screws, align parts, or loosen stuck items	/

3.3 Select the mount location

Saturn 8-12K LVS series can be used outdoors (protection class IP65). Please consider the followings before selecting the location:

- Choose the solid wall to install the inverter.
- Mount the inverter at eye level.
- Adequate heat dissipation space must be provided for the inverter.
- The ambient temperature should be between-25~60℃（-13~140 ℉） to ensure optimal operation.

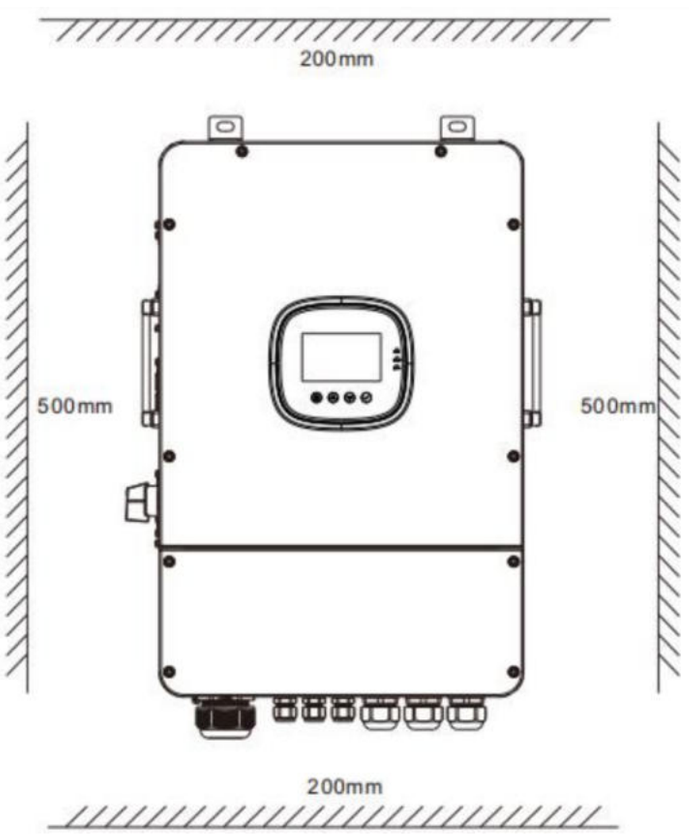

⚠ DANGER

- Do not install the inverter where highly flammable materials are near by.
- Do not install the inverter in potential explosive areas.
- Do not install the inverter with lead-acid batteries in a confined space.

⚠ CAUTION

- Do not install the inverter in direct sunlight.
- Do not install or use the inverter in a humid environment.

Saturn 8-12K LVS series

3.4 Mount the inverter

Punch 4 mounting holes in the wall with an electric drill according to the specified size, and insert 4 M8*60 expansion screws above.

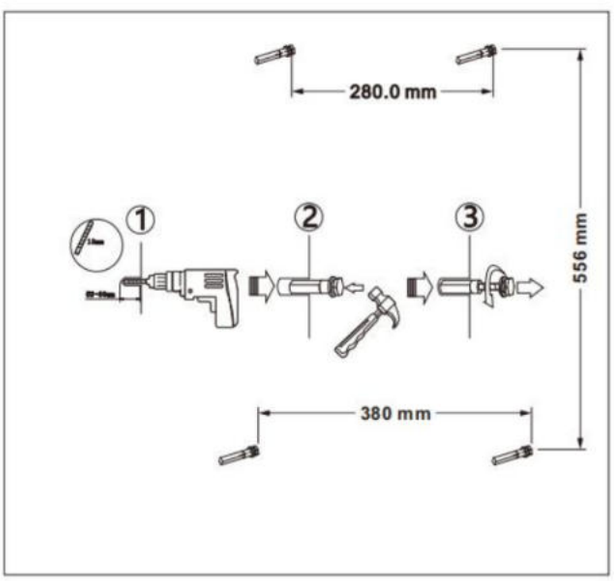

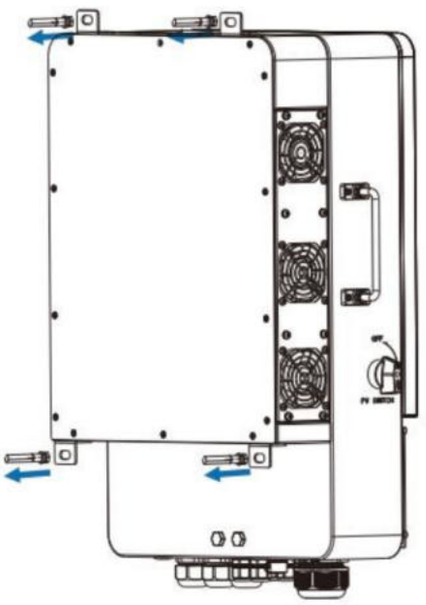

3.5 Remove the terminal cover & anti insect net

Using a screwdriver, remove the terminal protection cover and anti-insect net.

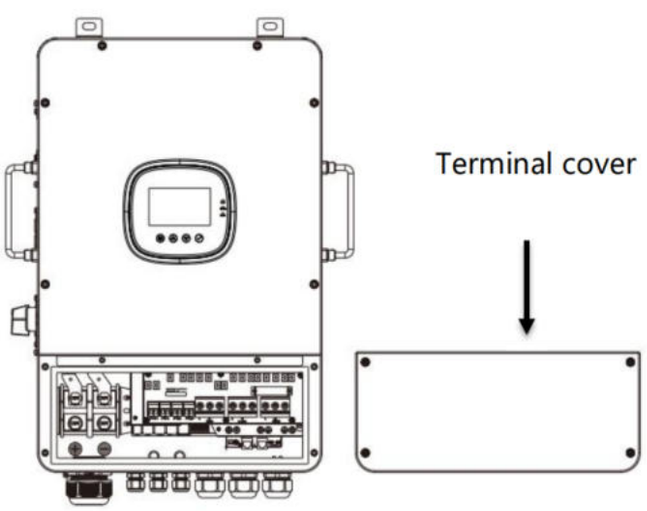

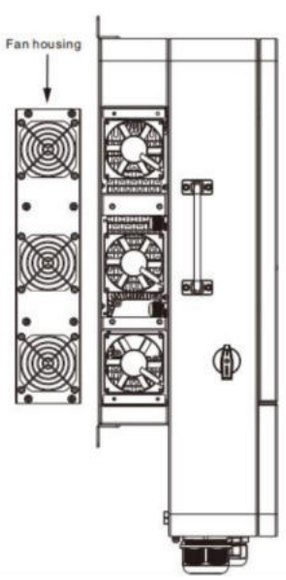

NOTICE

- When using the device in areas with poor air quality, the dust screen is easily blocked by air particles. Please disassemble and clean the dust screen periodically to avoid affecting the internal air flow rate of the inverter, which may trigger an over-temperature protection fault (19/20 fault) affecting the use of the power supply and the service life of the inverter.

04 Connection

4.1 Single-phase output

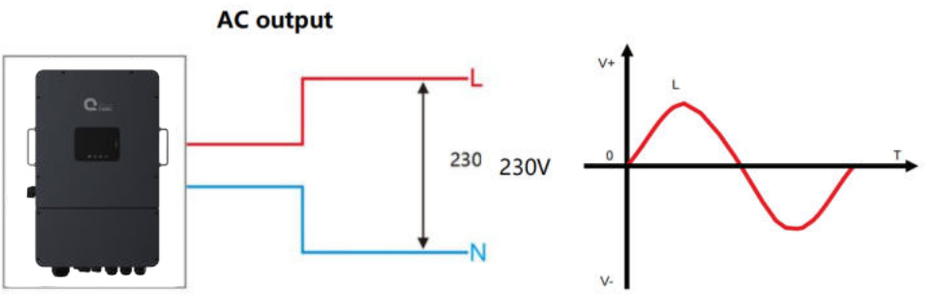

Items	Description
Applicable Model	Saturn 8-12K series model
Output Voltage Range (L-N)	200 ~ 240Vac, 230Vac default

NOTICE

- Users can change the output phase mode and output voltage by setup menu.
- The output voltage can be set from 200V to 240V.

Saturn 8-12K LVS series

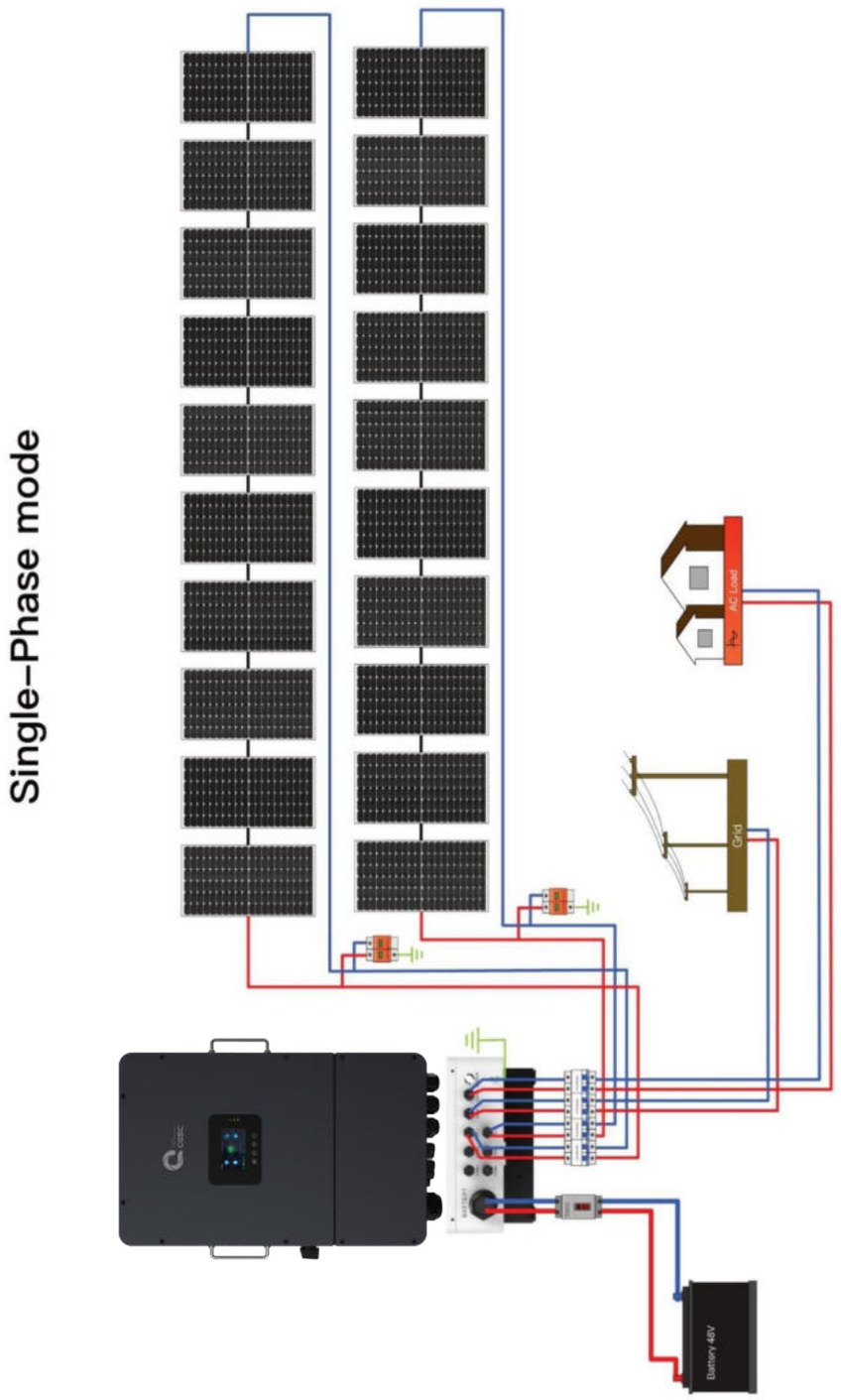

12

4.2 Cable & circuit breaker requirement

- **PV INPUT**

Model	Cable Diameter	Max. PV Input Current	Circuit Breaker Spec
Saturn 8K LVS	5mm²/10AWG	22A	2P—25A
Saturn 10K LVS	5mm²/10AWG	22A	2P—25A
Saturn 12K LVS	5mm²/10AWG	22A	2P—25A

- **AC INPUT**

Model	Cable diameter	Max input current	CircuitBreaker Spec
Saturn 8K LVS	13mm²/6AWG(L/N)	63A	2P-63A
Saturn 10K LVS	13mm²/6AWG(L/N)	63A	2P-63A
Saturn 12K LVS	13mm²/6AWG(L/N)	63A	2P-63A

- **Generator**

Model	Cable diameter	Max input current	Circuit Breaker Spec
Saturn 8K LVS	13mm²/6AWG(L/N)	63A	2P-63A
Saturn 10K LVS	13mm²/6AWG(L/N)	63A	2P-63A
Saturn 12K LVS	13mm²/6AWG(L/N)	63A	2P-63A

- **Battery**

Model	Cable Diameter	Max. Battery Current	Circuit Breaker Spec
Saturn 8K LVS	42mm²/ 2 AWG	230A	2P-250A
Saturn 10K LVS	42mm²/ 1 AWG	230A	2P-250A
Saturn 12K LVS	54mm²/ 0 AWG	270A	2P-300A

- **AC OUTPUT**

Model	Output Mode	Cable Diameter	Circuit Breaker Spec
Saturn 8K LVS	Signal phase	13mm²/6AWG(L/N)	2P-63A
Saturn 10K LVS	Signal phase	13mm²/6AWG(L/N)	2P-63A
Saturn 12K LVS	Signal phase	13mm²/6AWG(L/N)	2P-63A

Saturn 8-12K LVS series

NOTICE

PV input, AC input, AC output 1. Use a stripper to remove the 6~8mm insulation of the cable. 2. Fixing a ferrule at the end of the cable (ferrule needs to be prepared by the user).	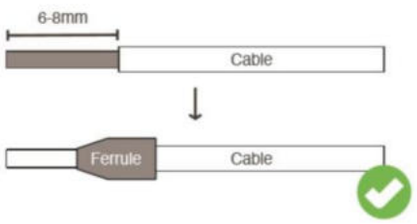
Battery 1. Use a stripper to remove the 6~8mm insulation of the cable. 2. Fixing cable lugs that supply with the box at the end of the cable.	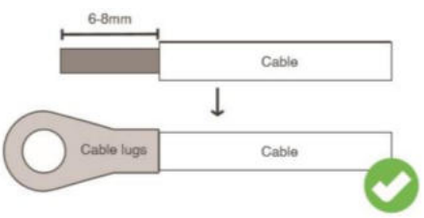

The wire diameter is for reference only. If the distance between the PV array and the inverter or between the inverter and the battery is long, using a thicker wire will reduce the voltage drop and improve the performance of the system.

4.3 GRID & LOAD & GEN connection

Connect the live,neutral and ground wires according to the cables' position and order shown in the diagram below.

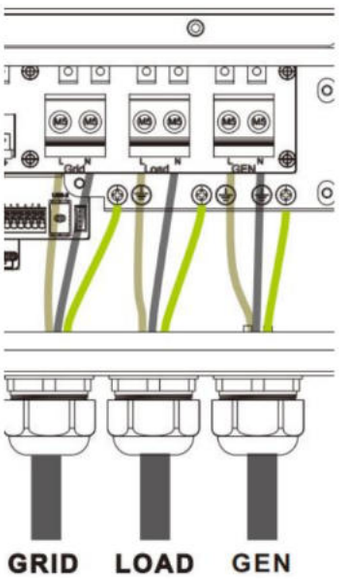

⚠ DANGER

- Before connecting the AC input and output, the circuit breaker must be disconnected to avoid the risk of electric shock and must not be operated with electricity.
- Please check that the cable used is sufficient for the requirements, too thin, poor quality cables are a serious safety hazard.

4.4 Battery Connection

Connect the positive and negative cable of the battery according to the diagram below.

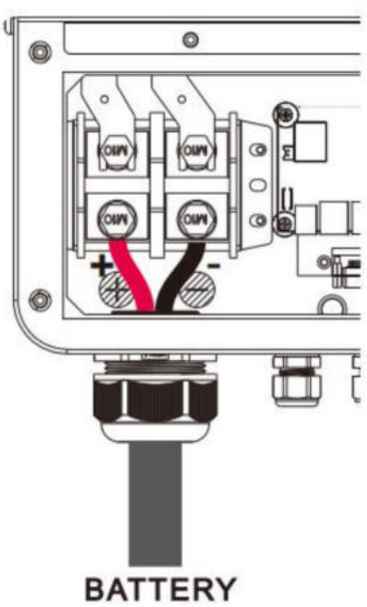

Saturn 8-12K LVS series

⚠ DANGER

- Before connecting battery, the circuit breaker must be opened to avoid the risk of electric shock and must not be operated with electricity.
- Make sure that the positive and negative terminals of the battery are connected correctly and not reversed, otherwise the inverter may be damaged.
- Please check that the cable used is sufficient for the requirements, too thin, poor quality cables are a serious safety hazard.serious safety hazard.

4.5 PV connection

Connect the positive and negative wires of the two strings of PV according to the diagram below.

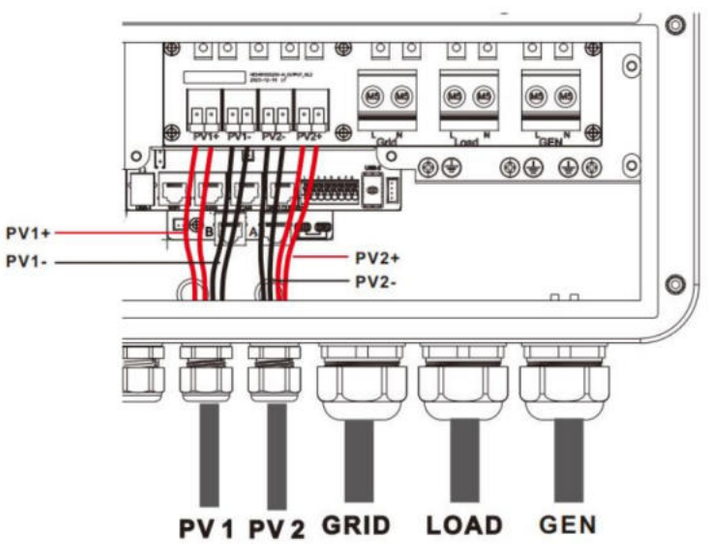

⚠ DANGER

- Before connecting PV, the circuit breaker must be opened to avoid the risk of electric shock and must not be operated with electricity.
- Please make sure that the open circuit voltage of the PV modules in series does not exceed the M**ax. Open Circuit Voltage** of the inverter (this value is 500V), otherwise the inverter may be damaged.
- PV1 and PV2 must be independent and must not be used in a mixed manner; otherwise, the inverter will be damaged.

4.6 Dry contact connection

Use a small screwdriver to push back the direction indicated by the arrow, and then insert the communication cable into the dry junction port. (Communication cable cross section 0.2~1.5mm²)

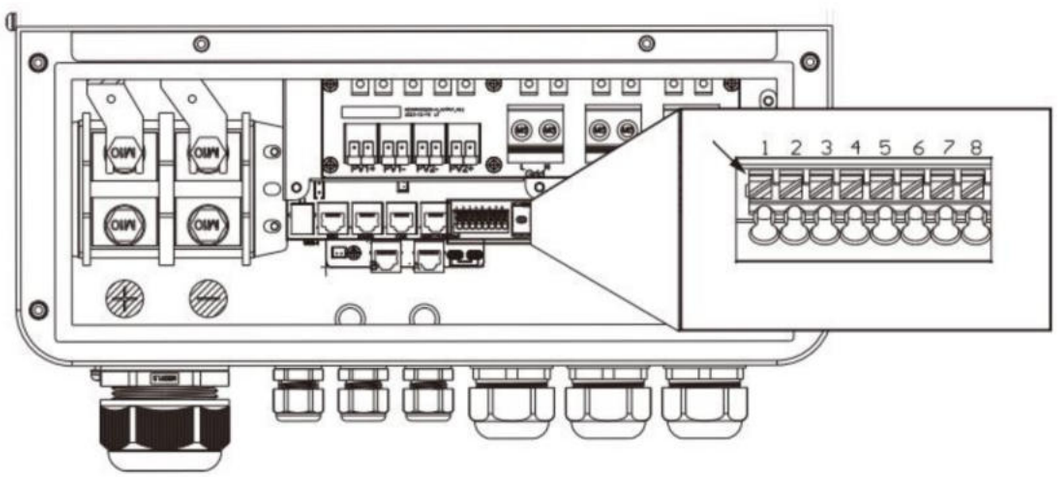

4.7 Grounding connection

Please make sure the grounding terminal connect to the Grounding Bar.

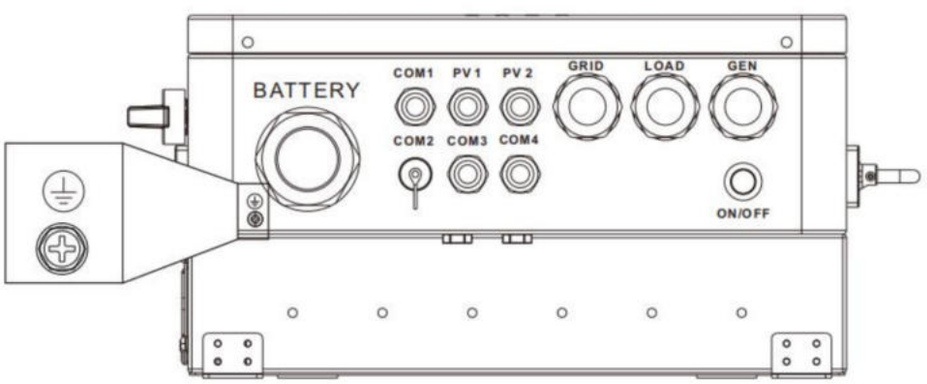

NOTICE

- The grounding cable should have a diameter of not less than 4 mm² and be as close as possible to the grounding point.

4.8 Final assembly

After ensuring that the wiring is reliable and the wire sequence is correct, install the terminal protection cover in place.

- Step 1: Close the circuit breaker of the battery.
- Step 2: Press the rocker switch on the bottom of inverter, the screen and indicators light up to indicate that the inverter has been activated.
- Step 3: Sequential close of the circuit breakers for PV, AC input and AC output.
- Step 4: Start the loads one by one in order of power from small to large.

4.9 Start up the inverter

4.9.1 Introduction

1. Up to six units connected in parallel.
2. When using the parallel operation function, the following connecting lines (package accessories) shall be firmly and reliably connected:

Parallel communication line*1:

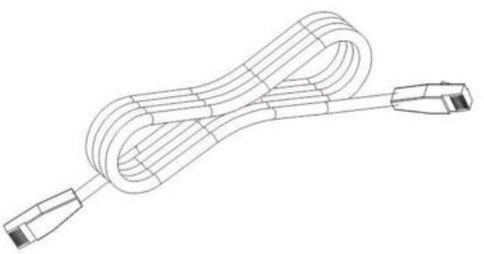

4.9.2 Precautions for connecting the parallel connecting lines

Warning:

1. PV connection:

When connected in parallel, the PV arrays of each machine must be independent and the PV arrays of PV1 and PV2 of each machine must also be independent.

2. Battery wiring:

Parallel connection in single or three-phase: ensure that all solar storage inverters are connected to the same battery, with BAT + connected to BAT + , BAT - connected to BAT -, and that the connection is correct with the same wiring length and line diameter before power on, so as to avoid the abnormal operation of parallel system output caused by wrong connection.

3. LOAD wiring:

Parallel connection in single phase: ensure L-to-L, N-to-N and PE-to-PE connection for all solar storage inverters, and that the connection is correct with the same wiring length and line diameter before power on, so as to avoid the abnormal operation of parallel system output caused by wrong connection.

Parallel connection in three-phase: ensure N-to-N and PE-to-PE connection for all solar storage inverters. The L lines of all inverters connected to the same phase need to be connected together. But L lines of different phases cannot be joined together. Other connection precautions are the same as parallel connection in single phase. For specific wiring, please refer to 2.4.4 Wiring Diagram.

4. GRID wiring:

Parallel connection in single phase: ensure L-to-L, N-to-N and PE-to-PE connection for all solar storage inverters, and that the connection is correct with the same wiring length and line diameter before power on, so as to avoid the abnormal operation of parallel system output caused by wrong connection. Meanwhile, it is not allowed to have multiple different AC source inputs to avoid damage to the external equipment of the inverter. The consistency and uniqueness of AC source input shall be ensured.

Parallel connection in three-phase: ensure N-to-N and PE-to-PE connection for all solar storage inverters. The L lines of all inverters connected to the same phase need to be connected together. But L lines of different phases cannot be joined together. Other connection precautions are the same as parallel connection in single phase. For specific wiring, please refer to 2.4.4 Wiring Diagram.

5. Wiring of parallel communication line:
Our parallel communication cable is a shielded 10Pin network connection cable, which can be used for single- phase or three-phase parallel connection. Each machine must be connected with one out and one in. This means that the machine "Parallel_A" is connected to the machine to be parallelized "Parallel_B", and that the machine "Parallel_A" is not allowed to connect to the "Parallel_B". "Parallel_B" or "Parallel_A" is connected to the machine to be parallelized "Parallel_A". At the same time, the parallel communication cable of each machine should be fastened with 10Pin network connection cable to avoid disconnection or poor contact of the parallel communication cable, which may cause abnormal operation or damage to the system output.

6. Before and after connecting the system, please check the following system wiring diagrams in detail to ensure that all wiring is correct and reliable before powering on.

7. After the system is wired, powered on and in normal operation, if a new inverter needs to be connected, make sure to disconnect the battery input, PV input, AC input and AC output, and that all solar storage inverters are powered off before reconnecting into the system.

4.9.3 Schematic diagram of parallel connection in single phase

1. The parallel communication line and current sharing detection line of the solar storage inverter need to be locked with screws after connecting.

The parallel mode need to set as”single phase parallel”for each inverters



Saturn 8-12K LVS series

1. In case of parallel operation with multiple inverters, the schematic diagram of parallel connection is as follows:

a) Two units connected in parallel:

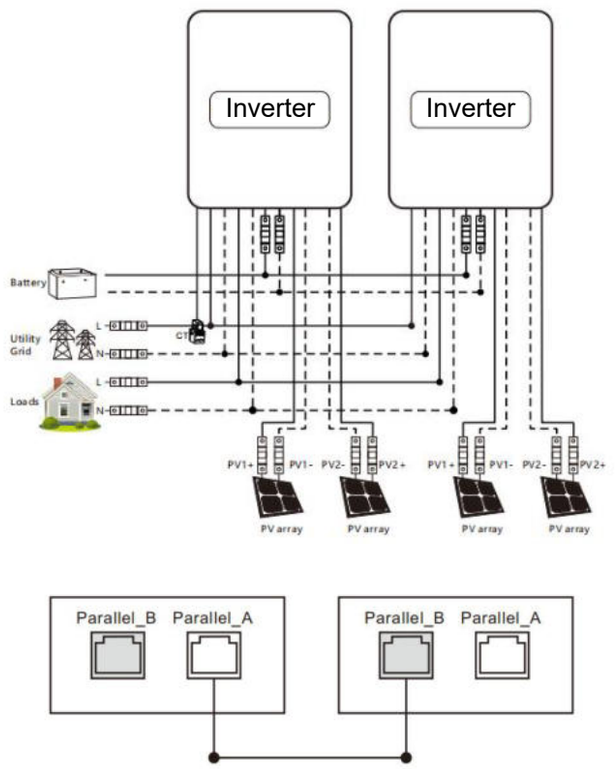

b) Three units connected in parallel:

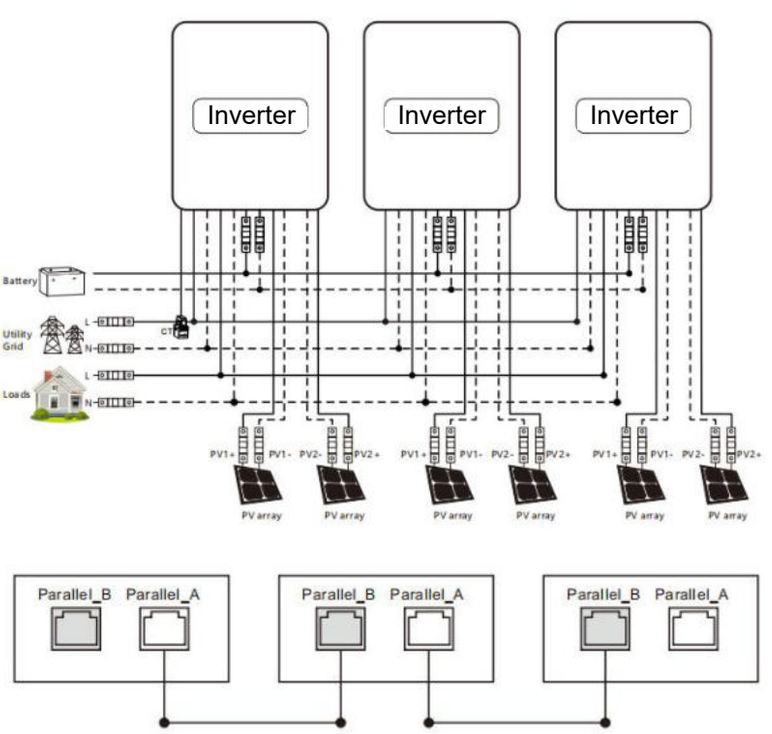

c) Four units connected in parallel:

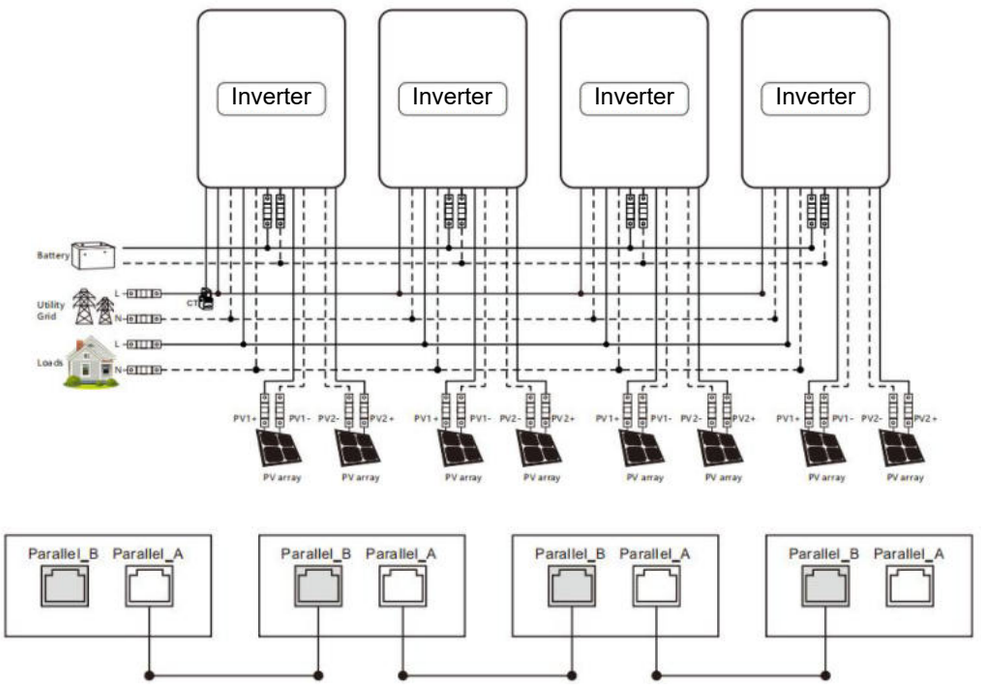

d) Five units connected in parallel:

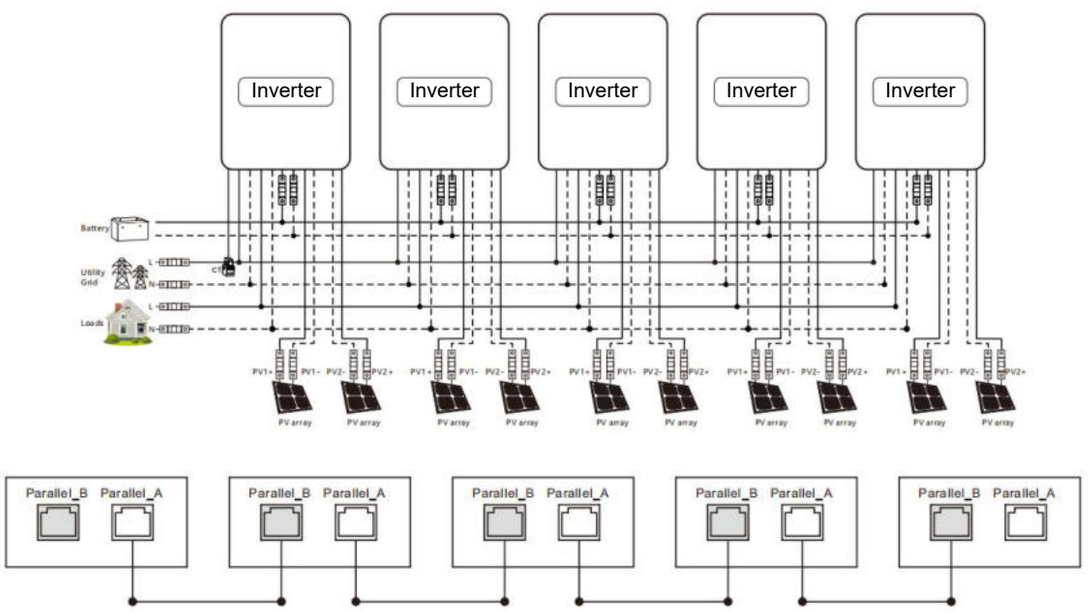

Saturn 8-12K LVS series

e) Six units connected in parallel:

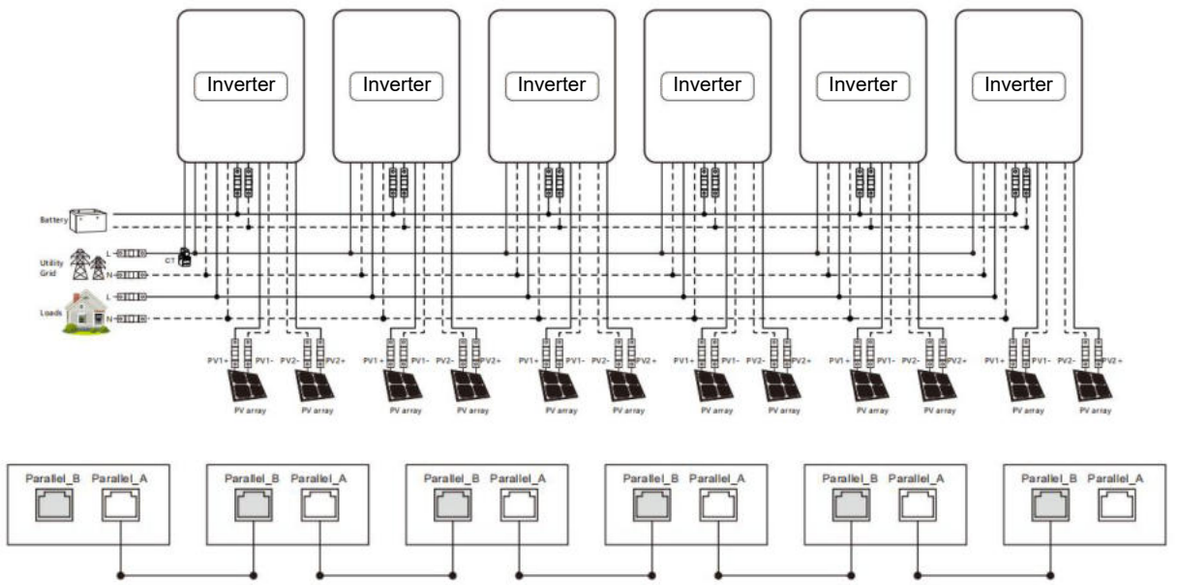

4.9.4 Schematic diagram of parallel connection in three phase

1. The parallel communication line and current sharing detection line of the solar storage inverter need to be locked with screws after connecting.

Parallel Operation in three phase :

All inverters in P1 must be set as [three phase A]
All inverters in P2 must be set as [three phase B]
All inverters in P3 must be set as [three phase C]
When the output phase voltage is 230Vac
At present the line voltage between the live wire L1 in phase 1 and the live wire L2 in phase 2 is 230*1.732 = 398Vac, and similarly the line voltage

P1 inverters setting



P2 inverters setting

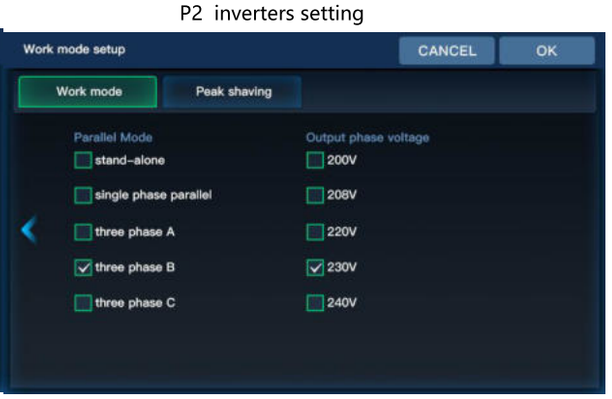

P3 inverters setting

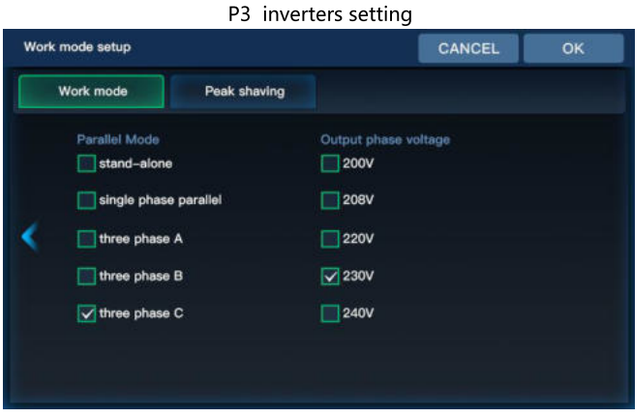

Saturn 8-12K LVS series

a) Three units connected in three phase:

1+1+1 system:

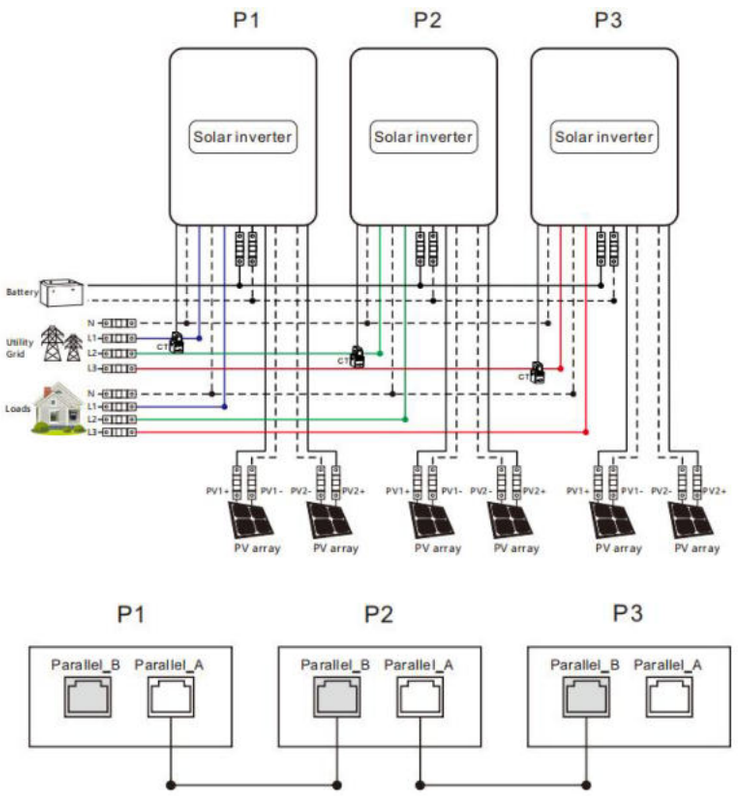

b) Four units connected in three phase:

2+1+1 system:

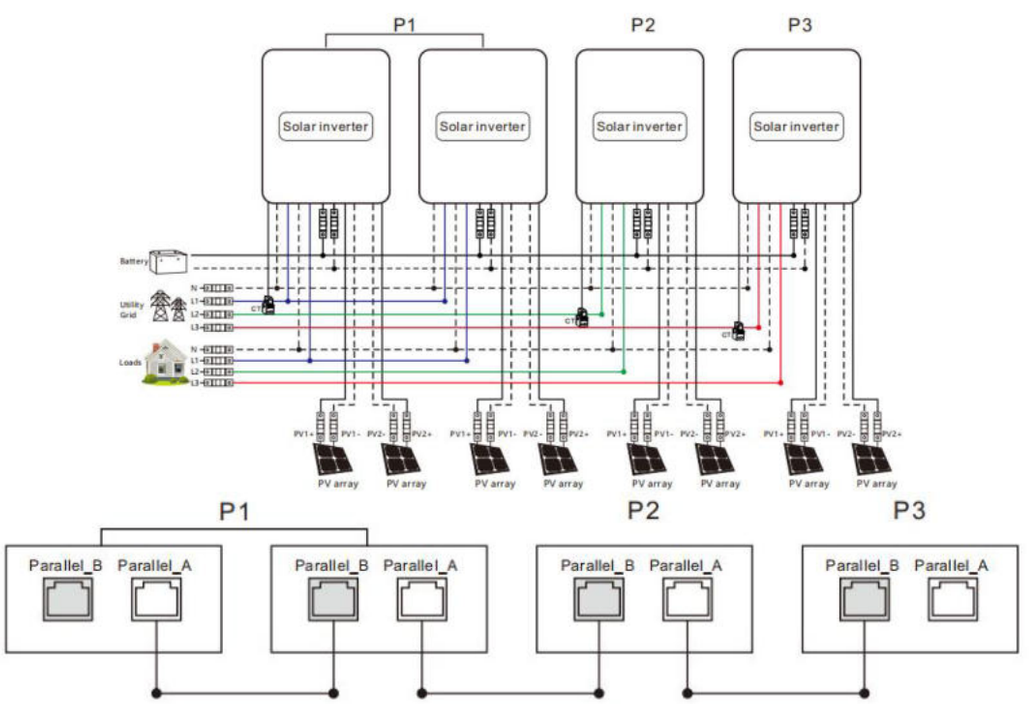

24

c) Five units connected in three phase:

3+1+1 system:

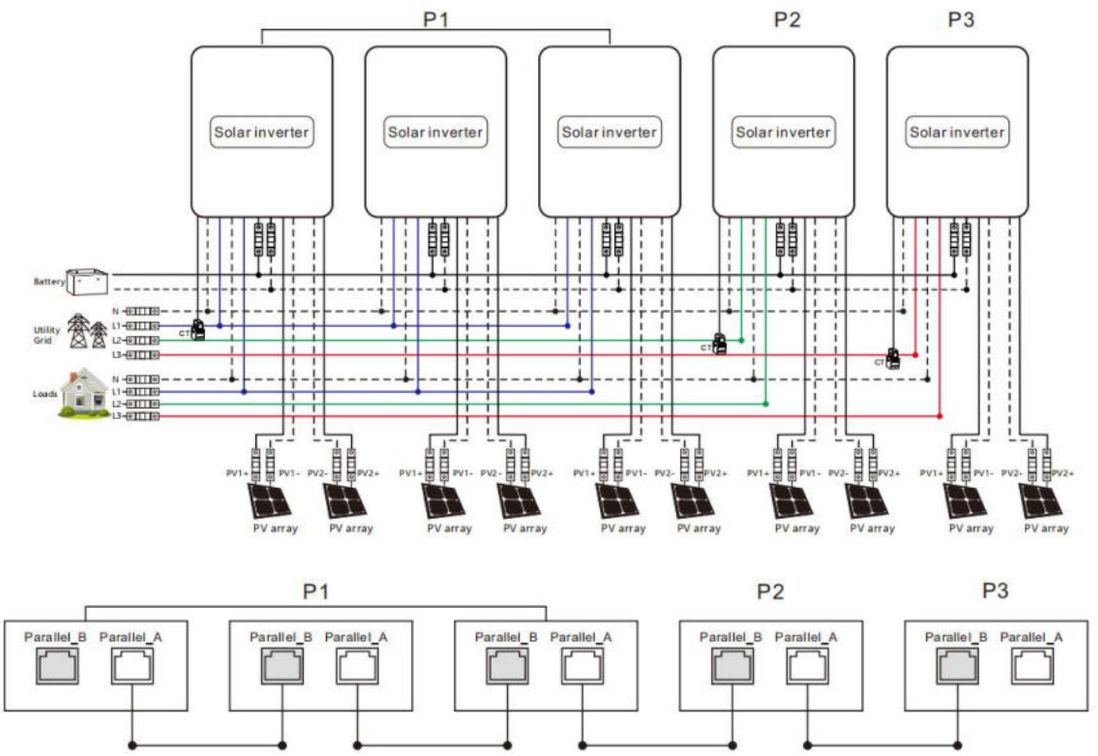

2+2+1 system:

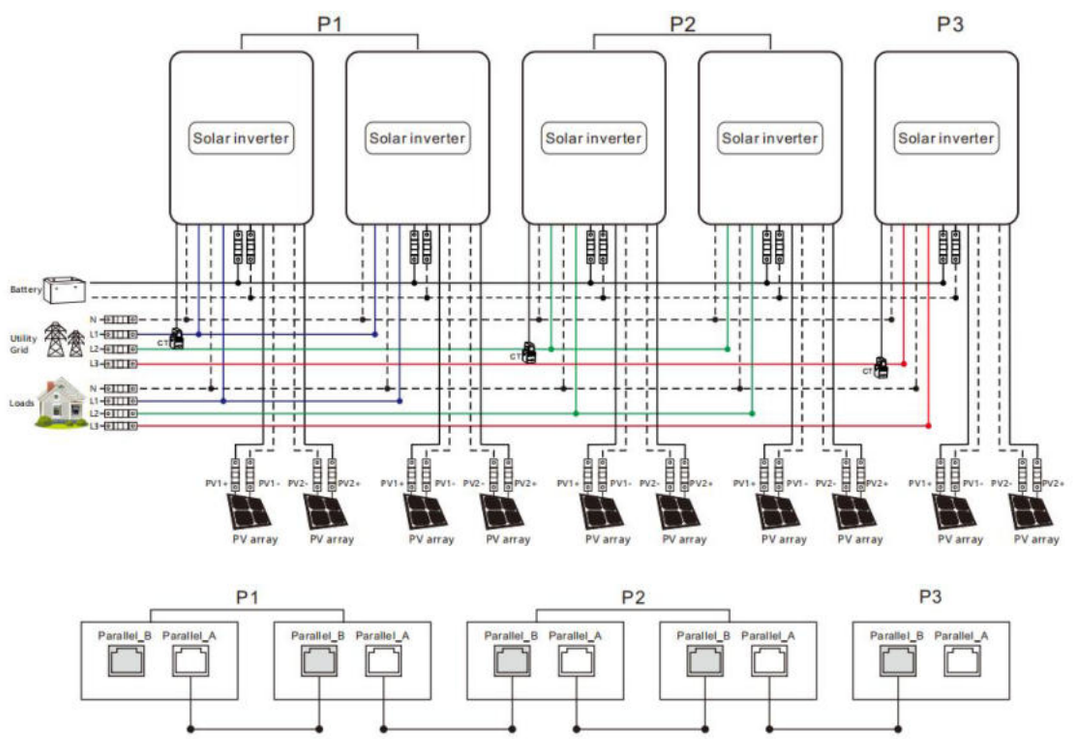

Saturn 8-12K LVS series

d)Six units connected in three phase:

2+2+2 system:

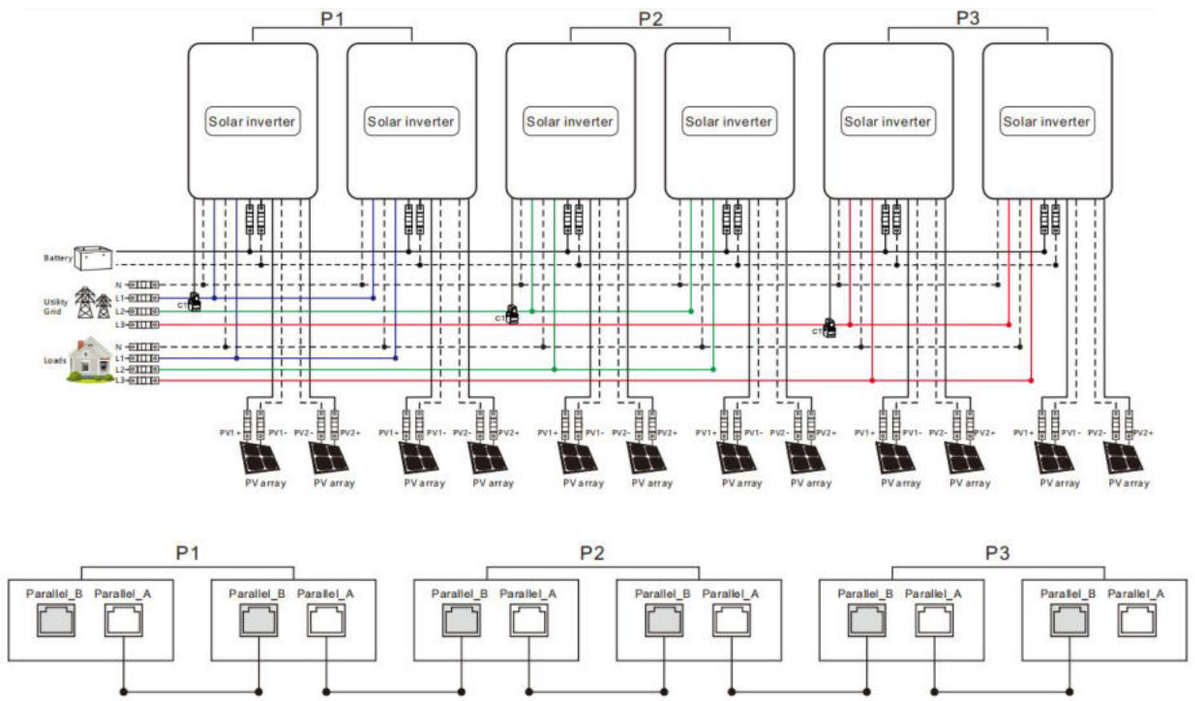

3+2+1 system:

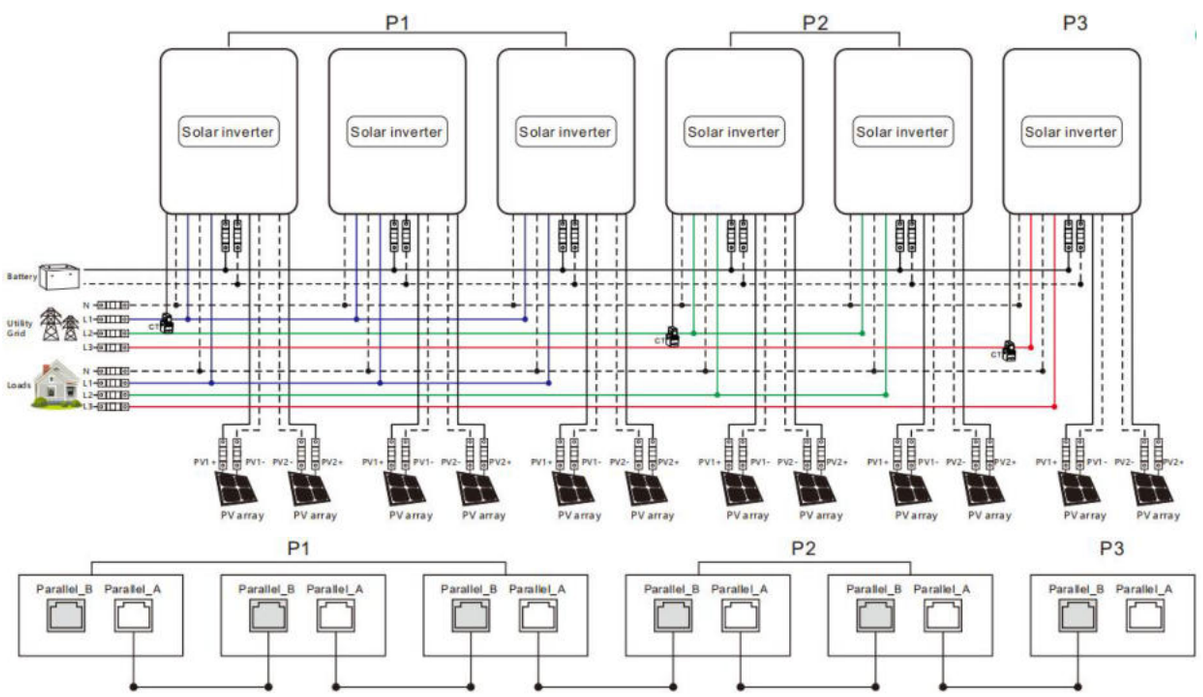

4+1+1 system:

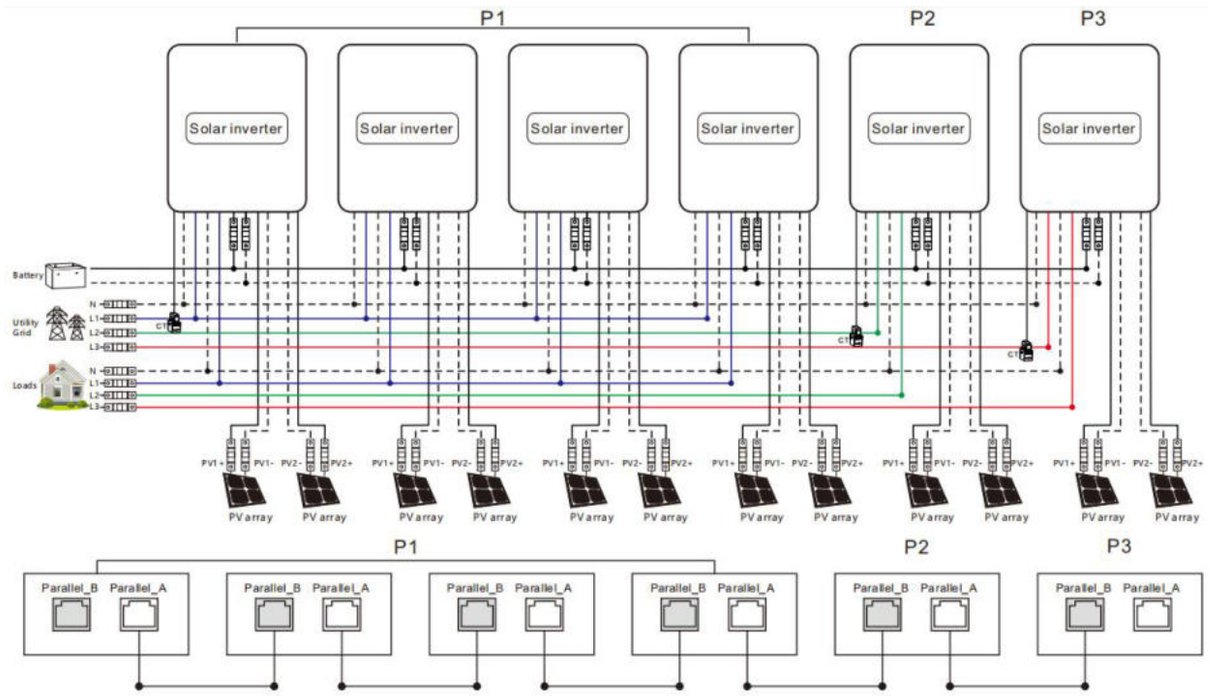

Note:

1) Before starting up and running, please check whether the connection was correct to avoid any abnormalities in the system.

2) All wiring must be fixed and reliable to avoid wire drop during use.

3) When the AC output is wired to the load, it shall be properly wired according to the requirements of the electrical load equipment to avoid damage to the load equipment.

4) Setting item “output phase voltage setting”needs to be set consistently or only for the master. When paralleling, the voltage set by the master will prevail, and the master will be forced to rewrite the rest of the slaves to be consistent. This option can be set in standby mode only.

5) Machine factory default for single machine mode, if you use parallel or three-phase function, you need to set the”Parallel mode “ item parameters through the screen. The setting method is: power on one machine at a time, the rest of the machine off, and then set the ”Parallel mode “ item parameters according to the site system operation mode. After this machine is set successfully, turn off the machine switch and wait for the machine to be powered down, then set the rest of the machines in turn until all machines are set, and then all machines are powered up again at the same time and enter the working state.

6) After the system runs, the output voltage is measured correctly, and then the load setting is connected.

Saturn 8-12K LVS series

05 Operation

5.1 Operation and display panel

The operation and display panel below includes 1 LCD screen, 3 indicators, 4 touchable keys.

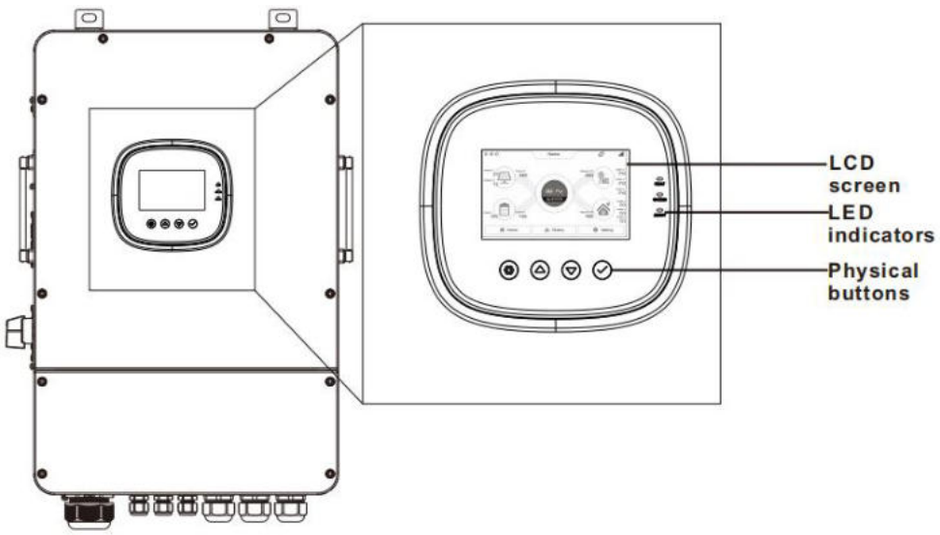

Keys

Keys	Description
	To enter/exit the setting menu
	To last selection
	To next selection
	To confirm/enter the selection in setting menu

LED Indicators

Indicators	Color	Description
FAULT	Red	Flash: error occur
CHARGE	Green	Continued: charging complete
		Flash: charging
AC/INV	Yellow	Continued: utility grid by-pass output
		Flash: inverter output

Display panel



Icon	Description	Icon	Description
	Solar panel		Load
	Battery		Grid or Generator
	Home page		Inverter is Working
	History data		Setting
	Local time		The buzzer is slient
	BMS communicate status		The enery direction

Saturn 8-12K LVS series

View real-time data

On the LCD home screen, click the inverter icon, battery icon, mains icon, load icon and photovoltaic icon to view the real-time data of the machine.

System data			
No.	**Item**	**No.**	**Item**
1	Machine state	8	SN
2	MCU1 version	9	Min version number
3	LCD version	10	Rated power
4	MCU2 version	11	RS485 Address
5	Outside Temperature	12	Transformer temperature
6	inverter Voltage	13	inverter Current
7	Customer ID		
Battery data			
1	SOC (Percentage of remaining battery capacity)	5	Discharge current
2	Battery voltage	6	BMS protocol
3	Battery current	7	Battery type
4	Battery power (Battery charging and discharging power)	8	Battery Charge Status
Grid data			
1	Voltage V	5	Current A
2	active power	6	apparent power
3	Frequency	7	Mains charging current
4	CT power	8	
Load data			
1	Voltage	5	Current
2	UPS load active power	6	UPS load apparent power
3	Frequency	7	load rate
4	BUS Voltage		
PV data			
1	PV1 voltage V	5	PV2 current
2	PV1 current A	6	PV2 power
3	PV1 power W	7	Generate energy total（kWh）
4	PV2 voltage V		

Click on the history button in the menu bar below to access the historical data and view various types of historical data. T

Tody data			
1	Battery charging energy	4	Load consumption energy
2	Battery discharging energy	5	Grid charging energy
3	Solar generated energy	6	Load consumption energy from grid
Historiy			
1	PV generation last seven days history	4	Mains charge history for last 7 days
2	Battery charge history for last 7 days	5	Load power consumption history for last 7 days
3	Battery discharge history for last 7 days	6	Load power consumption from the mains history for last 7 days
Enery Statistics			
1	Total Battery Charging Energy	4	Total Battery Disharging Energy
2	Total solar generated energy	5	Total load consumption energy
3	Total grid charging energy	6	Total load consumption energy from grid
Historical faults			

5.2 Setting

Operating instructions: Click on the settings in the menu bar at the bottom of the screen to enter the setup interface, including the basic settings, work mode setup, battery setup,on grid setup, advanced setup of the five major setup items.

5.2.1 Basic Setup

5.2.1.1 Display Setup

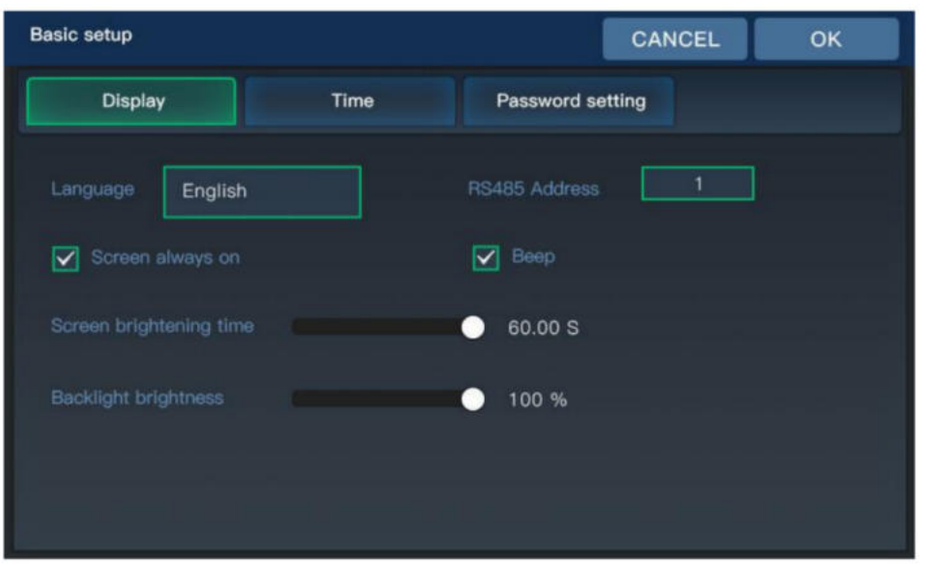

Parameter Meaning	Description
Language	Currently only English
RS485 Address	Display and current inverter RS485 address, range 1-254
Screen always on	Selectable whether the screen is always on or not
Beep	You can choice whether enable the Beep alarm
Screen brightening time	Setting range 0-60S
Backlight brightness	0-100%

5.2.1.2 Time Setup

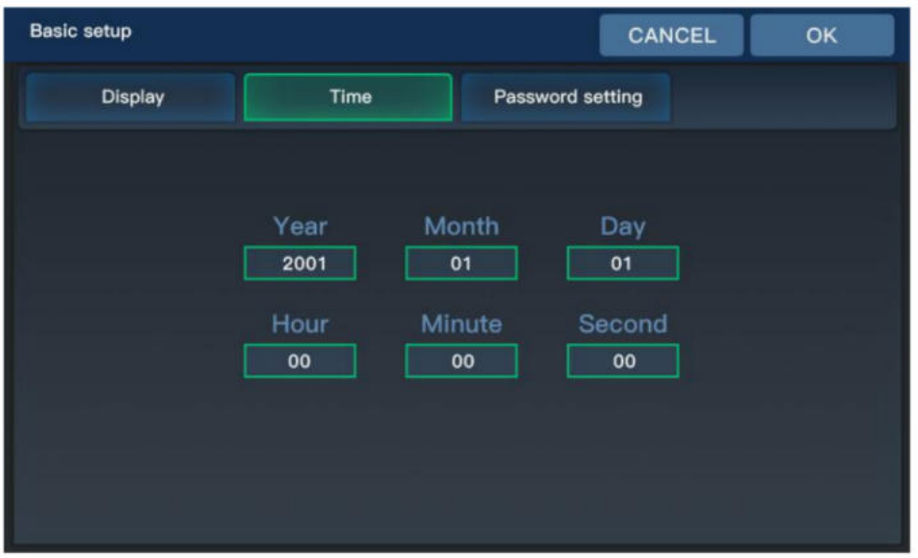

5.2.1.3 Password Setting（Password is required to access the Grid Settings and Advanced Settings）

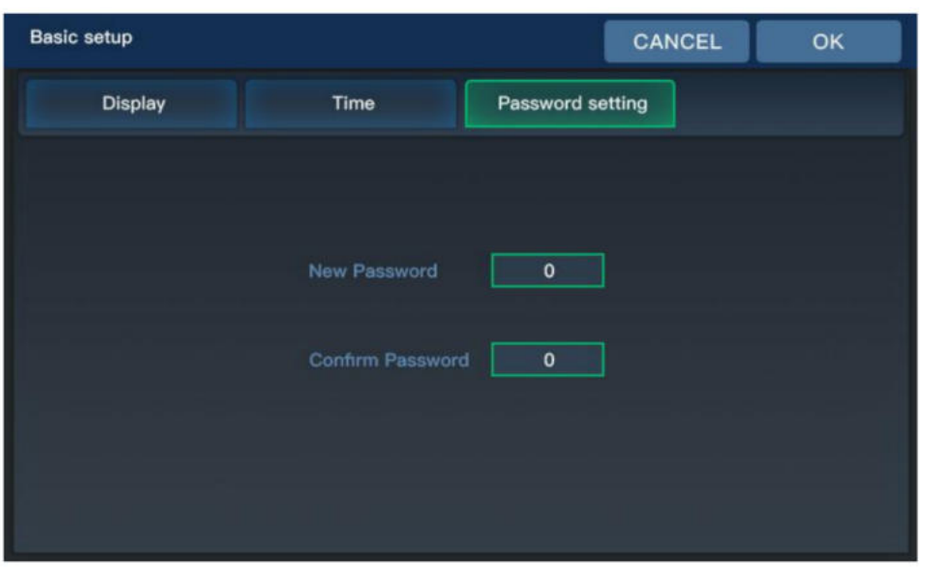

Default password is "4321".
Password setting value range: 0-65535

5.2.2 On grid setup

To enter this setting, you need to enter the password set by the user, the default password is "4321".

5.2.2.1. Basic

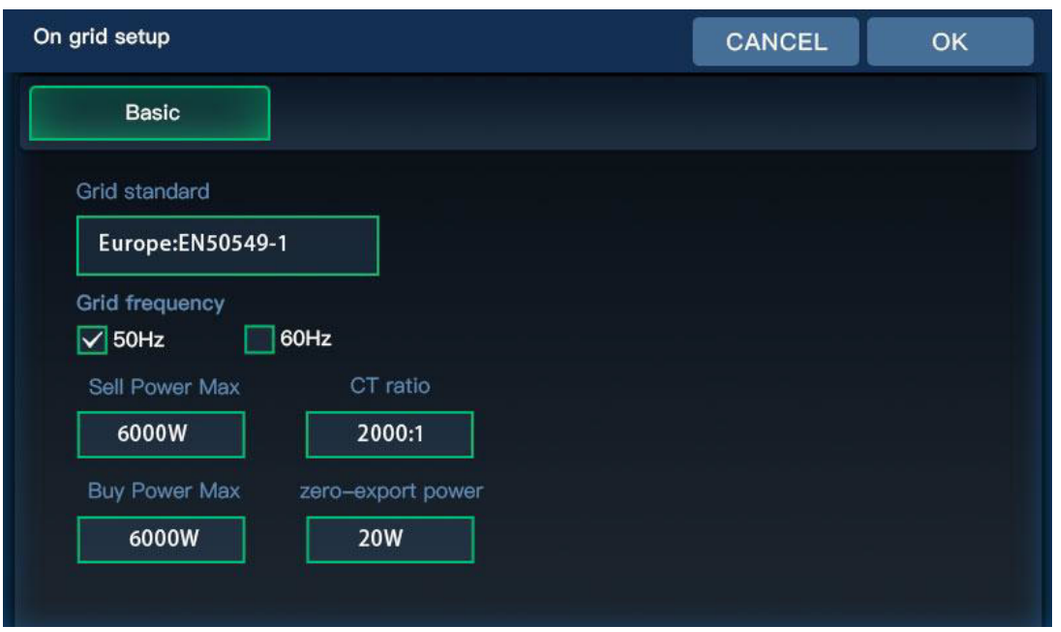

Parameter Meaning	Description
Grid standard	Eu general:EN50549-1
	South Africa: NRS-097
	UK:G99
	Other regions:GNL
Grid Frequency	Selection of local grid frequency，50Hz/60Hz
CT ratio	When connecting an external CT, enter the ratio on the CT specification.
Sell power Max	On grid power
Buy power Max	Maximum power drawn from the grid. If the grid charging power + load power exceeds this setting, the machine reduces the charging power. (Setting range: 0 to rated power)
Zero-export power	Error calibration power in the case of backflow prevention, recommended setting 20-100W

5.2.3 Work Mode Setup

5.2.3.1.Work Mode

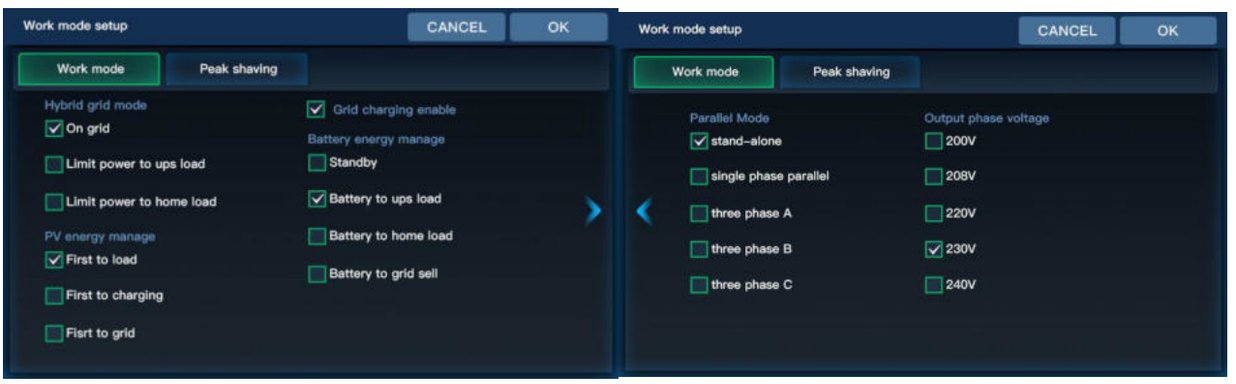

Home Load: connected to the GRID port of the machine, requires external CT for monitoring.
Ups Load: connected to the LOAD port of the machine.

Parameter Meaning	Option	Description
Hybrid grid mode	On grid	Direct grid connection of excess PV energy
	Limit Power to ups load	Ups load backflow prevention, photovoltaic or battery energy is only for the ups load, excess energy will not be connected to the grid
	Limit Power to home load	Home load anti-backflow, solar or battery energy is only supplied to the home load, excess energy will not be connected to the grid.
PV energy manage	• When mixed grid mode is set to "Limit Power to ups load" or when CT is not connected, the following load refers to the ups load. • When mixed grid mode is set to "Limit Power to home load/On grid" and CT is connected, the following load refers to the ups load plus the home load.	
	First to Load	PV power supply logic: load-charge-grid connection
	First to charging	PV power supply logic: charge-load-grid connection
	First to grid	PV power supply logic: load-grid connection-charge
Grid charging enable	Selectable grid participation in battery charging	
Battery energy manage	Standby	The battery does not discharge, and the battery is discharged only when the working state is off the grid.
	Battery to ups load	When the PV power is less than the UPS load power, the battery discharge is added.
	Battery to home load	The battery can supply the power to Home load
	Battery to grid sell	The battery can supply the power to grid.
Parallel mode	Stand-alone	
	Single phase Parallel	
	Three Phase A	Three-phase parallel connection setting All machines in phase 1 must be set as 【three phase A】 All machines in phase 2 must be set as 【three phase B】 All machines in phase 3 must be set as 【three phase C】
	Three Phase B	
	Three Phase C	
		When the output voltage is 230Vac At present the line voltage between the live wire L1 in phase 1 and the live wire L2 in phase 2 is 230*1.732 = 398Vac, and similarly the line voltage
Output phase voltage	Settable: 200V,208V,220V,230V,240V	

Saturn 8-12K LVS series

Set the Work Mode:

1. Feed Grid First
Combination:
• Hybrid Grid Mode: On grid
• PV Energy Management: First to grid
• Battery Energy Management: Standby (configurable as needed)

Explanation:
• When PV energy is sufficient: PV power supplies the load first, surplus energy is fed into the grid, and the battery is charged only last.
• When PV energy is insufficient: PV power and grid power jointly supply the load, and the battery does not participate in loading.
• When PV is not operating: The grid supplies the load; the battery will discharge only when the mains power is unavailable.

2. Self-use
Combination:
• Hybrid Grid Mode: On grid
• PV Energy Management: First to load
• Battery Energy Management: Battery to home load

Explanation:
• When PV energy is sufficient: PV power supplies the load first, and surplus energy is used to charge the battery or fed into the grid.
• When PV energy is insufficient: PV power, battery and grid jointly supply the load.
• When PV is not operating: Battery and grid jointly supply the load, with priority given to the battery.

3. Backup
Combination:
• Hybrid Grid Mode: Limit Power to home load
• PV Energy Management: First to charging
• Battery Energy Management: Standby (Battery energy management: set according to requirements.).

Explanation:
• When PV energy is sufficient: PV power prioritizes charging the battery, with surplus energy supplied to the load; PV can work with mains power to supply the load simultaneously.
• When PV energy is insufficient: PV only charges the battery, and the grid supplies the load.
• When PV is not operating: The grid supplies the load; the battery will discharge only when the mains power is unavailable.

5.2.3.2. Peak Shaving

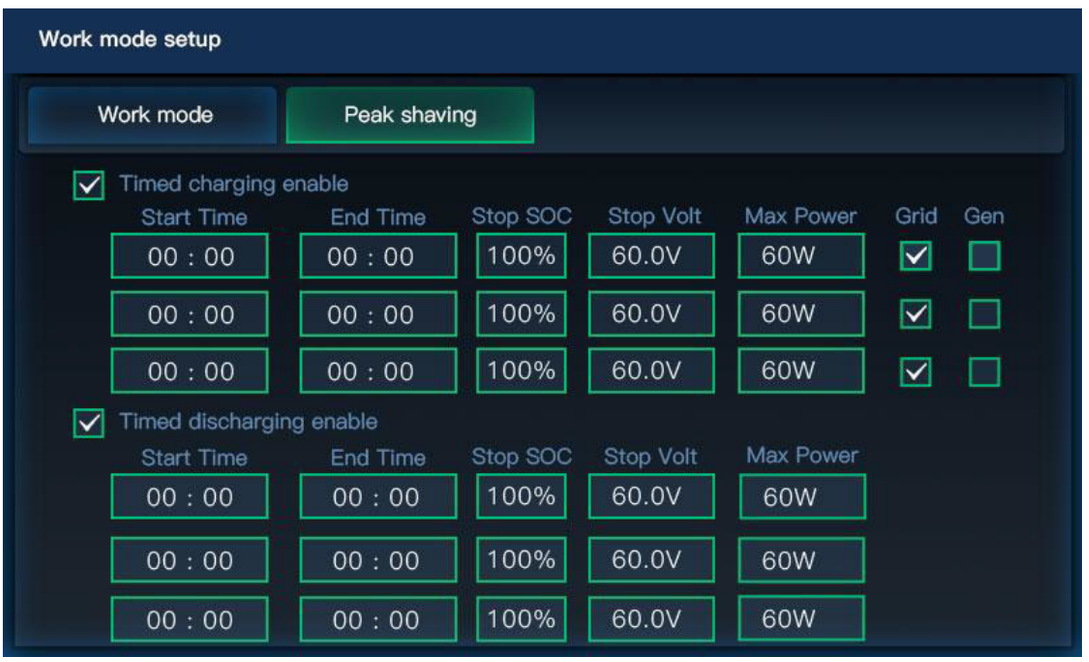

Parameter Meaning	Description
Time charging/ discharging enable	Select whether to turn on timed charging and discharging
Start/End Time	Setting the time period for timed charging and discharging
Stop SOC	Setting the battery charging cut-off SOC value and the cut-off SOC value for discharging during the timed charging and discharging time period (during BMS communication)
Stop Volt	Setting the battery charging cut-off voltage value and discharging cut-off voltage value during the timed charging and discharging time period (when the BMS is not communicating)
Max Power	Setting the battery charging power and discharging power during the timed charging and discharging time period
Grid charge	When setting the timed charge, select the grid to charge the battery
Generator	When setting the timed charge, select the generator to charge the battery

Saturn 8-12K LVS series

5.2.4 Battery setup

5.2.4.1. Battery Type

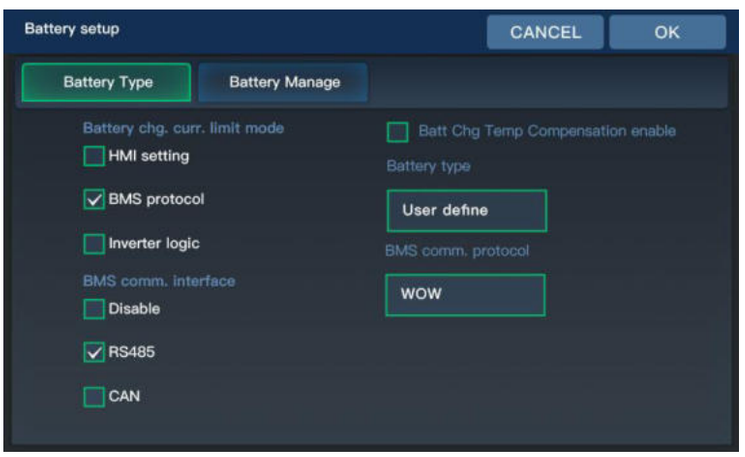

Parameter Meaning	Option	Description
Battery chg. curr. limit (Valid for BMS communication)	HMI	Maximum battery charging current is limited according to the inverter battery charging current setting value.
	BMS	Maximum battery charging current is limited by the current limit value of the BMS.
	Inverter	Maximum battery charging current is limited by the machine's derating logic.
BMS comm. interface	Disable	BMS does not communicate
	RS485	BMS RS485 communication function
	CAN	BMS CAN communication function
Battery Temperature Compensation	Select whether to turn on temperature compensation	
Battery Type	USER	User customizable to set all battery parameters
	SLd	Sealed Lead Acid Battery
	FLd	Open-ended lead-acid batteries
	GEL	gel lead-acid battery
	LFP/14/ 15/ LFP 16	Li-FePO4/14/15/16, corresponding to Li-FePO4 14 string, 15 string, 16 string
	N13/ N14	Ternary lithium batteries, N13/N14, corresponding to ternary lithium batteries 13 string, 14 string
	No battery	Without battery
BMS comm.protocol	When the BMS port selection setting item = 485 or CAN, you need to select the corresponding lithium battery manufacturer brand for communication: 1 : PACE-PACEEX 2 : RUDA-Ritar 3 : AOGUAN-=ALLGRAND BATTERY 4 : OULITE-OLITER 5 : CEF-CHANGFENG TECNOLOGY 6 : XINWANGDA -SUNWODA 7: DAQIN -DAKING 8 : WOW-SRNE 9: PYL-PYLONTECH 10 : MIT-FOXESS 11: XIX-XYE 12: POL-POWERMR 13: GUOX-Gotion 14: SMK-SMK 15: VOL-WEILAN 16:UZE-YUZE	

5.2.4.2. Battery Manage

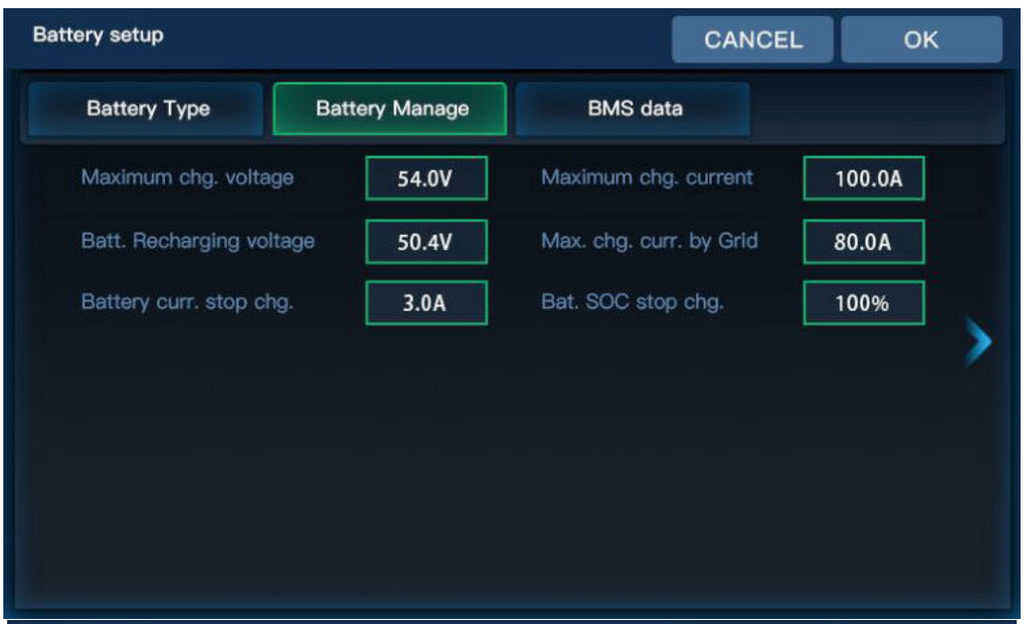



Parameter Meaning	Description
Maximum chg.voltage	When the battery is charging, the voltage reaches the value to stop charging
Batt. Recharging voltage	When the battery is fully charged, the inverter stops charging and resumes charging when the battery voltage falls below this voltage value.
Battery curr. stop chg.	when the charging current falls below this setting, the battery will stop charge.
Maximum chg. current	Setting the amount of current when charging the battery
Max. chg. curr. by Grid	When using mains charging, set the size of the battery mains charging current (the value is the battery current)
Bat.SOC stop chg.	"Charging will stop when the SOC value reaches this set point (effective when BMS communication is normal)."

Batt volt.stop dchg	When the battery reach this setting, it will stop discharging.
Batt volt.restart dischg	When the battery voltage is too low to discharge, the battery voltage needs to reach this setting to discharge again.
Battery under volt. alarm	Battery under-voltage alarm point, when the battery voltage is lower than the judgment point, the under-voltage alarm will be reported and the output will not be turned off.
Batt volt low fault recovery	When the battery report voltage low fault, the battery voltage reach this setting, the fault will be cleard.
Batt voltage low fault	When the battery voltage reach this setting, the inverter will report battery voltage low fault.
Battery max.curr.dcharge	Set the max battery discharger current
Batt.soc.stop.dchg	When the SOC value reaches this setting, the battery will stop discharge(valid when BMS communication is normal).
Batt.soc restart dischg	When the battery report SOC low fault, the battery SOC reach this setting, it can restart discharge(valid when BMS communication is normal).
Batt under capacity alarm	SOC value up to this setting will ralarm. The inverter output will not shut down and the fault disappears if the SOC value exceeds 5% of the set value. (Valid when BMS communication is normal)
Batt.soc low fault	When the battery voltage reach this setting, the inverter will report battery SOC low fault and stop discharging(valid when BMS communication is normal).
Batt. Volt. low fault delay	When the battery voltage reaches the "Batt voltage low fault" setting, the battery will stop diacharging with a delay.

5.2.4.3. BMS date(When the battery communicate with inverter)

Check the data that battery BMS uploade to inverter

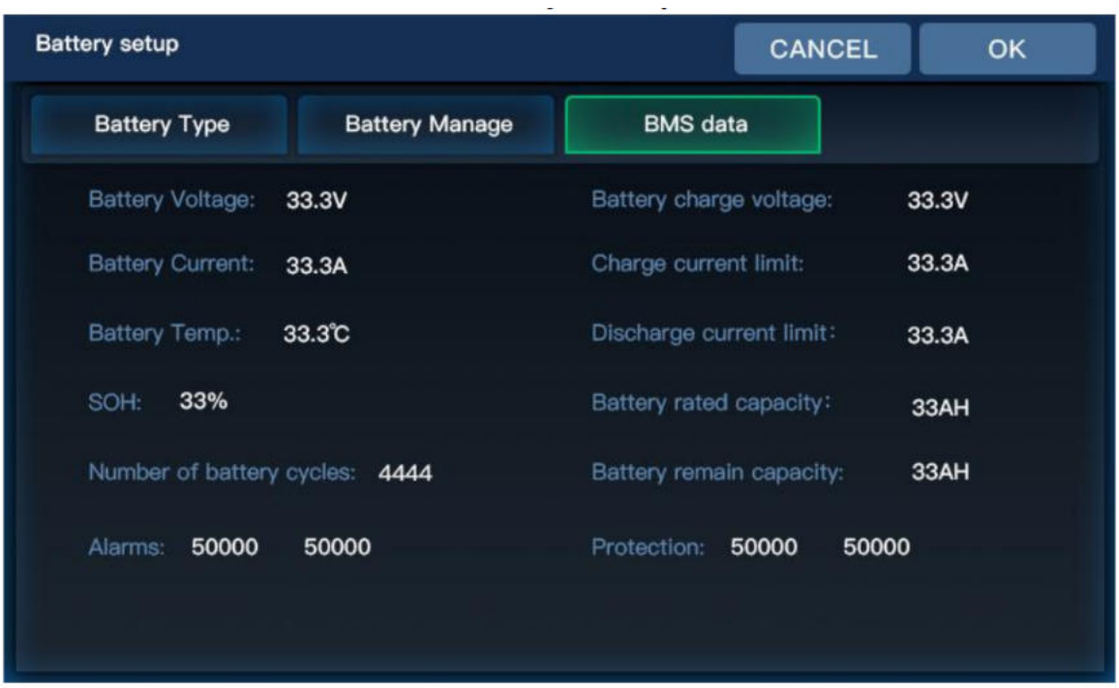

5.2.5 Advance Setup

To enter this setting, you need to enter the password set by the user, the default password is "4321".

5.2.5.1. Generator

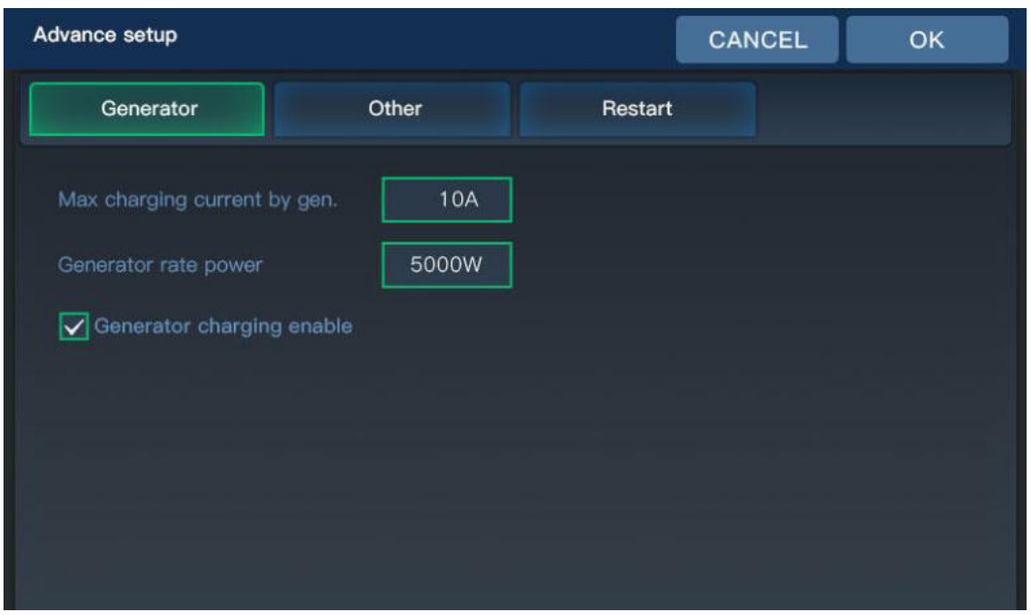

Parameter Meaning	Description
Max charging current by gen.	Maximum battery charging current during generator charging
Generator rate power	Setting the power of the generator up to the rated power of the inverter
Generator charging enable	Setting whether the generator is charged or not

5.2.5.2 Other

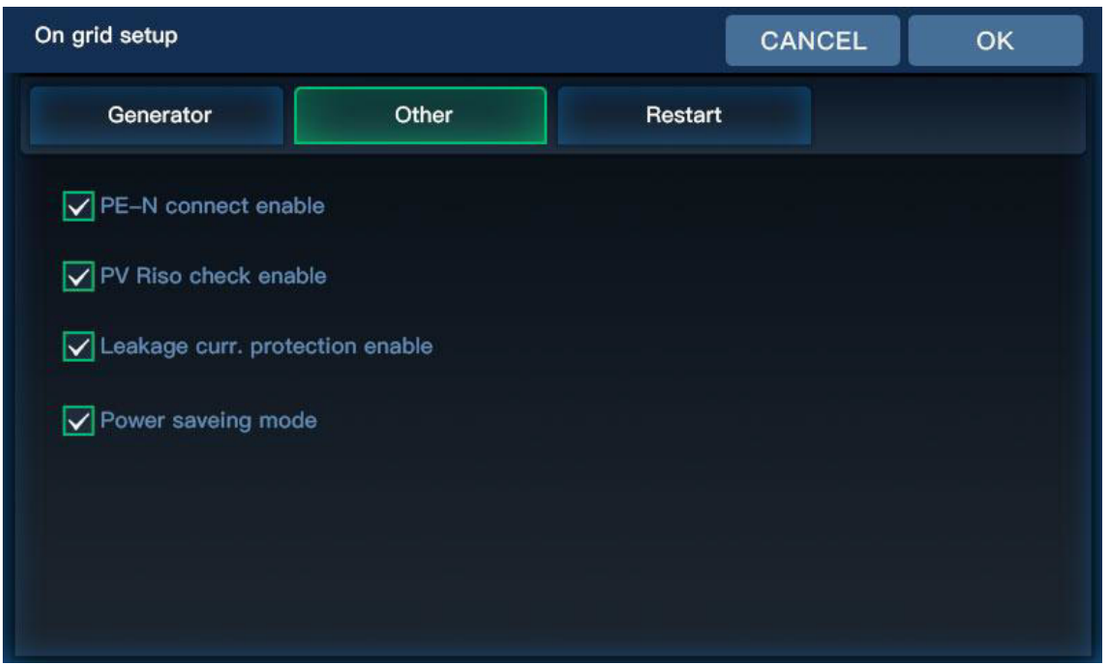

Parameter Meaning	Description
PE-N connect enable	Enable automatic switching of PE-N connections
PV Riso check enable	Enable PV insulation impedance detection
Leakage curr. protection enable	Enable leakage current protection
Power saveing mode	After turning on the energy-saving mode, if the load is empty or less than 25W, the inverter output will be shut down after a delay of 5min; when the load is more than 40W, the inverter will start automatically.

5.2.5.3 Restart

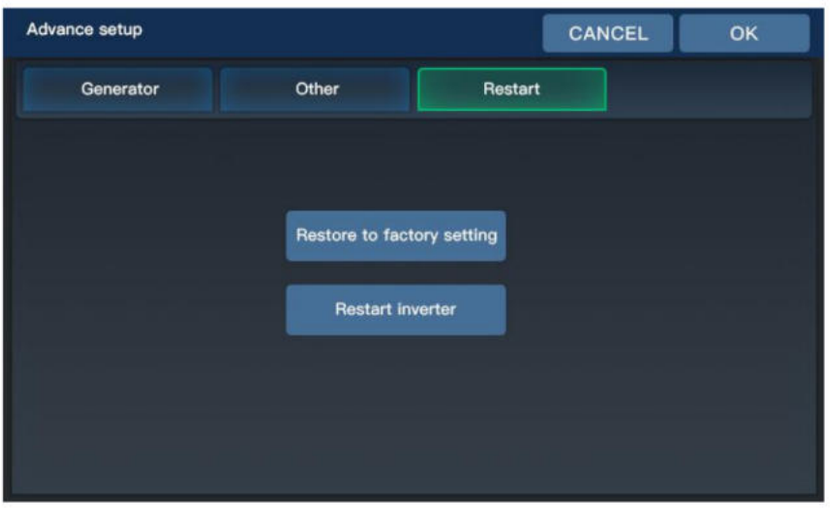

Parameter Meaning	Description
Restore Factory Settings	Reset all inverter settings
Reboot Inverter	Restart the inverter

Saturn 8-12K LVS series

5.3 Time-slot charging/discharging function

Saturn 8-12KW LVS series is equipped with a time-slot charging and discharging function, which allows users to set different charging and discharging periods according to the local peak and valley tariffs, so that the utility power and PV energy can be used rationally.
When mains electricity is expensive, the battery inverter is used to carry the load; when the mains electricity is cheap, the mains electricity is used to carry the load and charge, which can help customers to save electricity costs to the greatest extent.
The user can turn on/off the time-slot charging/discharging function in setup menu parameter 46 and 53.and set charging and discharging slot in parameter . Below are examples for users to understand the function.

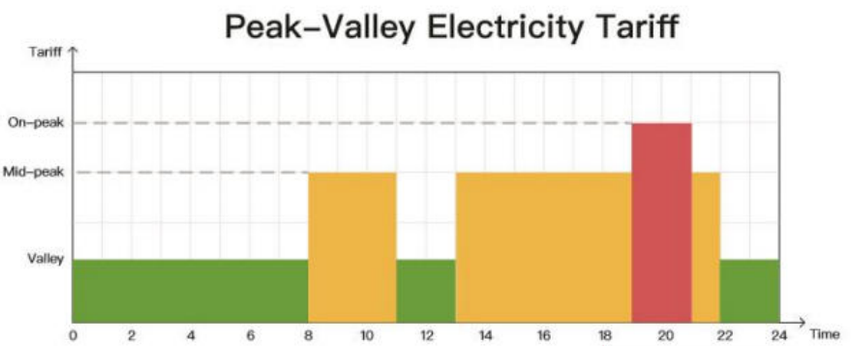

Time-slot Utility Charging/Carrying Function



With 3 definable periods, the user can freely set the mains charging/carrying time within the range of 00:00 to 23:59. During the time period set by the user, if PV energy is available, PV energy will be used first, and if PV energy is not available or insufficient, utility energy will be used as a supplement.

Time-slot Battery Disacharging Function



With 3 definable time periods, users can freely set the battery discharge time within the range of 00:00 to 23:59. During the time set by the user, the inverter will give priority to the battery inverter to carry the load, and if the battery power is insufficient, the inverter will automatically switch to mains power to ensure stable operation of the load.

5.4 Battery parameter

Lead-acid battery

Battery type / Parameters	Sealed lead acid battery (SLD)	Gel lead acid battery (GEL)	Flooded lead acid battery (FLD)	User-defined (USE)	Adjustable
Overvoltage disconnection voltage	60V	60V	60V	60V	
Battery fully charged recovery point	52V	52V	52V	52V	√
Boost charge voltage	-	-	-	40 ~ 60V	√
Undervoltage alarm voltage([01] fault)	44V	44V	44V	40 ~ 60V	√
Undervoltage alarm voltage recovery point([01] fault)	Undervoltage alarm voltage+0.8V				
Low voltage disconnection voltage([04] fault)	42V	42V	42V	40 ~ 60V	√
Low voltage disconnection voltage recovery point ([04] fault)(setup item [35])	52V	52V	52V	52V	√
Discharge limit voltage	-	-	-	40 ~ 60V	√
Over-discharge delay time	5s	5s	5s	1 ~ 30s	√
Boost charge duration	-	-	-	10 ~ 600 minutes	√

Saturn 8-12K LVS series

Li-ion batter

Battery type / Parameters	Ternary (N13)	Ternary (N14)	LFP (L16)	LFP (L15)	LFP (L14)	Adjustable
Overvoltage disconnection voltage	60V	60V	60V	60V	60V	
Battery fully charged recovery point	50.4V	54.8V	53.6V	50.4V	47.6V	√
Equalizing charge voltage	-	-	-	-	-	√
Boost charge voltage	53.2V	57.6V	56.8V	53.2V	49.2V	√
Undervoltage alarm voltage([01] fault)	43.6V	46.8V	49.6V	46.4V	43.2V	√
Undervoltage alarm voltage recovery point([01] fault)	Undervoltage alarm voltage+0.8V					
Low voltage disconnection voltage([04] fault)	38.8V	42V	48.8V	45.6V	42V	√
Low voltage disconnection voltage recovery point ([04] fault)(setup item [35])	46V	49.6V	52.8V	49.6V	46V	√
Discharge limit voltage	36.4V	39.2V	46.4V	43.6V	40.8V	√
Over-discharge delay time	30s	30s	30s	30s	30s	√
Boost charge duration	120 minutes	120 minutes	120 minutes	120 minutes	120 minutes	√

06 Communication

6.1 Overview

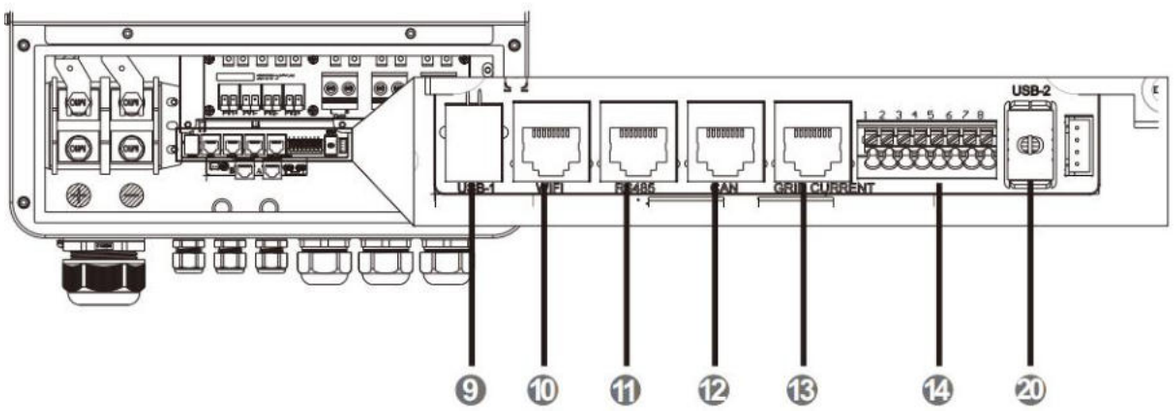

9	USB-B port	13	External CT port
10	WIFI port	14	Dry contact
11	RS485 port	20	USB-A port
12	CAN port		

6.2 USB-B port

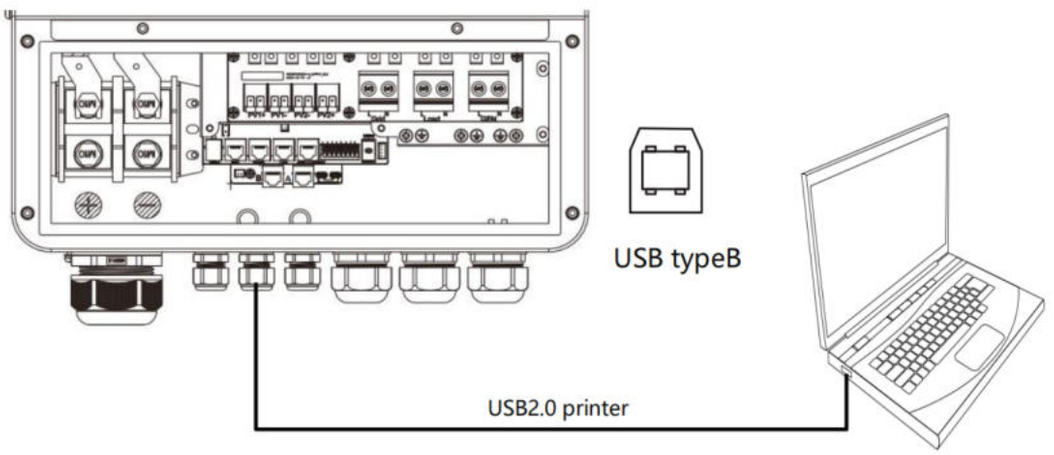

The user can read and modify device parameters through this port by using the host software. Please contact us for the host software installation package if you require one.

6.3 WIFI port

The WIFI port is used to connect to the Wi-Fi/GPRS data acquisition module, which allows the user to view the operating status and parameters of the inverter via the mobile phone APP.

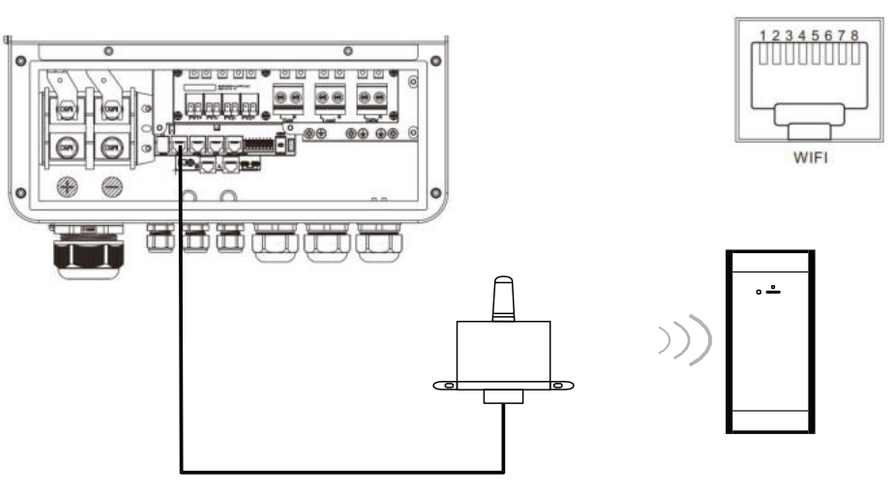

RJ45	Definition
Pin 1	5V
Pin 2	GND
Pin 3	/
Pin 4	/
Pin 5	/
Pin 6	/
Pin 7	RS485-A
Pin 8	RS485-B

6.4 CAN port

The CAN port is used to connect to the BMS of Liion battery .

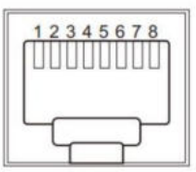

CAN

RJ45	Definition
Pin 1	/
Pin 2	/
Pin 3	/
Pin 4	CANH
Pin 5	CANL
Pin 6	/
Pin 7	/
Pin 8	/

6.5 RS485 port

The RS485 port is used to connect to the BMS of Liion battery.
Pin4 and Pin5 are for CAN

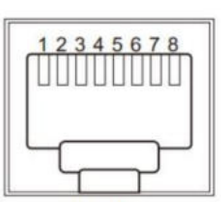

RS485

RJ45	Definition
Pin 1	RS485-B
Pin 2	RS485-A
Pin 3	Gnd
Pin 4	CANH
Pin 5	CANL
Pin 6	Gnd
Pin 7	RS485-A
Pin 8	RS485-B

NOTICE

If you need the inverter to communicate with the lithium battery BMS, please contact us for the communication protocol or to upgrade the inverter to the corresponding software program.

6.6 USB-A port

It is used to updated the LCD screen firmware.

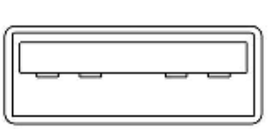

6.7 External CT port

For external CT model connection

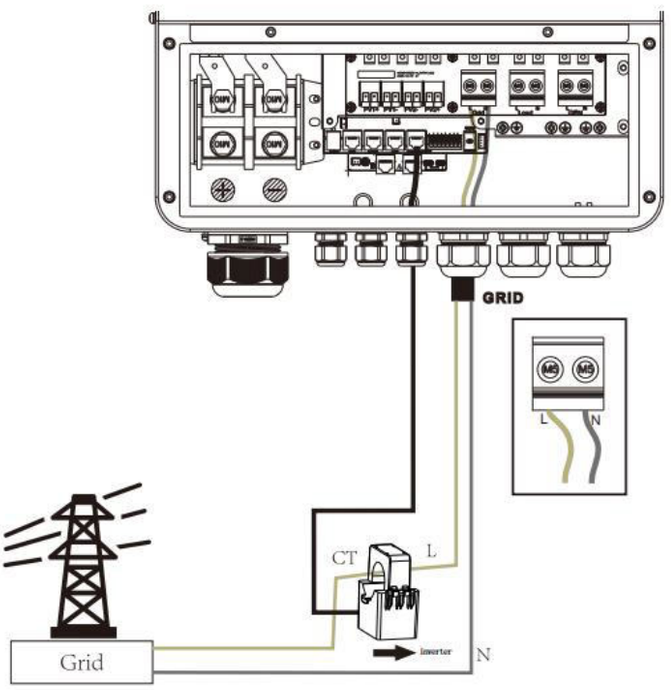

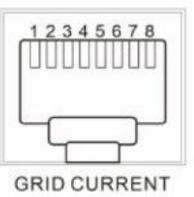

RJ45	Definition
Pin 1	CT1+
Pin 2	CT1-
Pin 3	/
Pin 4	/
Pin 5	/
Pin 6	/
Pin 7	/
Pin 8	/

1. Split Core Current Transformer (CT) dimension: (mm)
2. Secondary output cable length is 4m.
3.The CT direction is “to inverter”

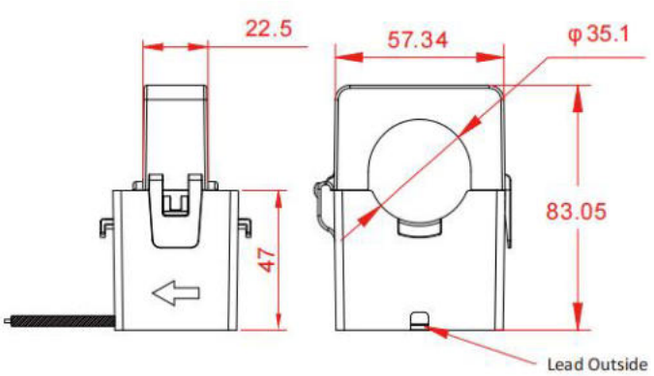



6.8 Dry contact

Dry contact port with 4 functions:
1. RSD power supply
2. Temperature sampling (reserved)
3. Generator remote start/stop

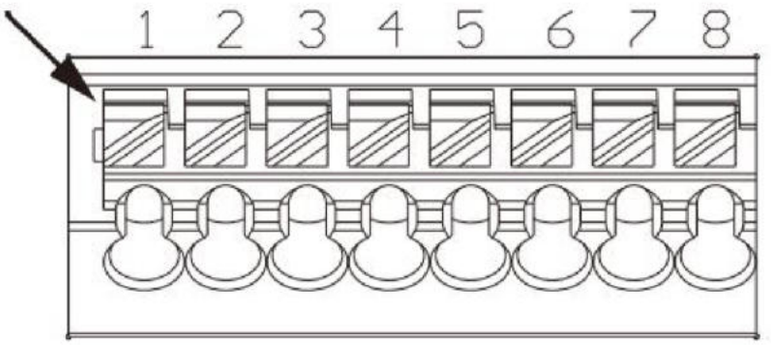

Function	Description
RSD power supply	PIN 1 is GND,PIN 2 is RSD 12V+
Temperature sampling reserved	Pin 1 & Pin 5 can be used for battery temperature sampling compensation.
Generator remote start/stop	6-7:NC 6-8:NO Remote generator shutdown: Pins 6 to 7 are normally closed, and pins 6 to 8 arenormally open.

NOTICE

If you need to use the remote start/stop function of the generator with dry contact, ensure that the generator has ATS and supports remote start/stop.

07 Fault and Remedy

7.1 Fault code

Fault code	Fault name	Whether it affects the output or not	Description
【01】	BatVoltLow	No	Battery undervoltage alarm.
【02】	BatOverCurrSw	Yes	Battery discharge average current overcurrent (software protection).
【03】	BatOpen	Yes	Battery not-connected alarm.
【04】	BatLowEod	Yes	Battery undervoltage stop discharge alarm.
【05】	BatOverCurrHw	Yes	Battery overcurrent (hardware protection).
【06】	BatOverVolt	Yes	Charging overvoltage protection.
【07】	BusOverVoltHw	Yes	Bus overvoltage (hardware protection).
【08】	BusOverVoltSw	Yes	Bus overvoltage (software protection).
【09】	PvVoltHigh	No	PV overvoltage protection.
【10】	PvOCSw	No	Boost overcurrent (software protection).
【11】	PvOCHw	No	Boost overcurrent (hardware protection).
【13】	OverloadBypass	Yes	Bypass overload protection.
【14】	OverloadInverter	Yes	Inverter overload protection.
【15】	AcOverCurrHw	Yes	Inverter overcurrent (hardware protection).
【17】	InvShort	Yes	Inverter short-circuit protection.
【19】	OverTemperMppt	No	Buck heat sink over temperature protection.
【20】	OverTemperInv	Yes	Inverter AC output with load or AC charging radiator over-temperature protection.

【21】	FanFail	Yes	Fan blockage or failure fault.
【22】	EEPROM	Yes	Memory failure.
【23】	ModelNumErr	Yes	Model setting error.
【26】	RlyShort	Yes	Inverted AC Output Backfills to Bypass AC Input.
【29】	BusVoltLow	Yes	Internal battery boost circuit failure.
【30】	BatCapacityLow1	No	Alarm given when battery capacity rate is lower than 10% (setting BMS to enable validity).
【31】	BatCapacityLow2	No	Alarm given when battery capacity rate is lower than 5% (setting BMS to enable validity).
【32】	BatCapacityLowStop	Yes	Inverter stops when battery capacity is low (setting BMS to enable validity).
【34】	CanCommFault	Yes	CAN communication fault in parallel operation.
【35】	ParaAddrErr	Yes	Parallel ID （communication address) setting error.
【37】	ParaShareCurrErr	Yes	Parallel current sharing fault .
【38】	ParaBattVoltDiff	Yes	Large battery voltage difference in parallel mode.
【39】	ParaAcSrcDiff	Yes	Inconsistent AC input source in parallel mode.
【40】	ParaHwSynErr	Yes	Hardware synchronization signal error in parallel mode.
【41】	InvDcVoltErr	Yes	Inverter DC voltage error.
【42】	SysFwVersionDiff	Yes	Inconsistent system firmware version in parallel mode.
【43】	ParaLineContErr	Yes	Parallel line connection error in parallel mode.
【44】	Serial number error	Yes	No serial number set at factory.
【45】	Error setting of split-phase mode	Yes	Item “Parallel” setting error.

Saturn 8-12K LVS series

【49】	Grid over voltage	Yes	selects the local corresponding grid standard.
【50】	Grid under voltage	Yes	
【51】	Grid over frequency	Yes	
【52】	Grid under frequency	Yes	
【53】	Grid loss	Yes	
【54】	Grid DC current over	Yes	
【55】	Grid standard un init	Yes	
【56】	Low insulation resistance fault	No	PV1+, PV2+ and PV- abnormally low impedance to ground.
【57】	Leakage current overload fault	Yes	System leakage current exceeds limit.
【58】	BMS communication error	No	Check whether the communication line is connected correctly and whether [33] is set to the corresponding lithium battery communication protocol.
【60】	BMS battery low temperature alarm	No	BMS alarm battery low temperature.
【61】	BMS battery over temperature alarm	No	BMS alarm battery over temperature.
【62】	BMS battery over current alarm	No	BMS alarm battery over current.
【63】	BMS battery undervoltage alarm	No	BMS alarm low battery.

7.2 Troubleshooting

Fault code	Faults	Remedy
Display	No display on the screen	Check if the battery switch or PV switch is closed; whether the switch is in the "ON" state; press any button on the screen to exit the screen sleep mode.
【06】	Battery overvoltage protection	Check that the battery voltage does not exceed the protection value. If it does, discharge the battery until the voltage falls below the battery over-voltage recovery point.
【01】 【04】	Battery undervoltage protection	Charge the battery until it returns to the low voltage disconnection recovery voltage.
【21】	Fan failure	Check if the fan is not turning or blocked by foreign object.
【19】 【20】	Heat sink over temperature protection	When the temperature of the device is cooled below the recovery temperature, normal charge and discharge control is resumed.
【13】 【14】	Bypass overload protection, inverter overload protection	① Reduce the use of power equipment; ② Restart the unit to resume load output.
【17】	Inverter short-circuit protection	① Check the load connection carefully and clear the short-circuit fault points; ② Re-power up to resume load output.
【09】	PV overvoltage	Use a multimeter to check if the PV input voltage exceeds the maximum allowable input voltage rated.
【03】	Battery disconnected alarm	Check if the battery is not connected or if the battery circuit breaker is not closed.
【40】 【43】	Parallel connection fault	Check if the parallel line is not connected well, such as loose or wrong connection.
【35】	Parallel ID setting error	Check whether the setting of parallel ID number is repeated.
【37】	Parallel current sharing fault	Check if the parallel current sharing line is not connected well, such as loose or wrong connection.

Saturn 8-12K LVS series

【39】	Inconsistent AC input source in parallel mode	Check whether the parallel AC inputs are from the same input interface.
【42】	Inconsistent system firmware version in parallel mode	Check whether the software version of each inverter is consistent.
【44】	Serial number error	Incorrect device serial number setting.
【45】	Parallel mode error	There is a device in the parallel system with the wrong parallel mode setting.
【49】	High grid voltage	Check that the grid voltage is within the normal range, if the grid voltage is abnormal, wait until the grid voltage is restored.
【50】	Low grid voltage	Check that the grid voltage is within the normal range, if the grid voltage is abnormal, wait until the grid voltage is restored.
【51】	High grid frequency	Check that the grid frequency is within the normal range, if the grid frequency is abnormal, wait until the grid frequency is restored.
【52】	Low grid frequency	Check that the grid frequency is within the normal range, if the grid frequency is abnormal, wait until the grid frequency is restored.
【53】	Grid unconnected	Check if the grid is correctly connected, e.g. if the switch is closed and if the grid is disconnected.
【54】	Grid-connected current with DC component over	Power down and restart the device, if it continues to report faults, contact the manufacturer after sales.
【56】	Low insulation resistance fault	Check that the system is well grounded and that the PV modules and cables are not worn.
【57】	Leakage current overload fault	Check that the system is well grounded and that the loads are not operating abnormally.

NOTICE

If you encounter product faults that cannot be solved by the methods in the above table, please contact our after-sales service department for technical support and do not disassemble the equipment by yourself.

08 Protection and Maintenance

8.1 Protection features

No	Protection Feature	Instruction
1	PV input current/power limiting protection	When the charging current or power of the PV array configured exceeds the PV input rated value, the inverter will limit the input power and charge at the rated.
2	PV input over-voltage	If the PV voltage exceeds the maximum value allowed by the hardware, the machine will report a fault and stop the PV boost to output a sinusoidal AC wave.
3	PV night reverse current protection	At night, the battery is prevented from discharging through the PV module because the battery voltage is greater than the voltage of PV module.
4	AC input over-voltage protection	When the AC input voltage of each phase exceeds 280V, the mains charging will be stopped and switched to the inverter mode.
5	AC input under-voltage protection	When the AC input voltage of each phase below 170V, the utility charging will be stopped and switched to the inverter mode.
6	Battery over-voltage protection	When the battery voltage reaches the over-voltage cut-off point, the PV and the utility will automatically stop charging to prevent the battery from being overcharged and damaged.
7	Battery under-voltage protection	When the battery voltage reaches the under-voltage cut-off point, the inverter will automatically stop the battery discharge to prevent damage from over-discharging the battery.
8	Battery over-current protection	After a period when the battery current exceeds that allowed by the hardware, the machine will switch off the output and stop discharging the battery.
9	AC output short-circuit protection	When a short-circuit fault occurs at the load output terminal, the AC output is immediately turned off and turned on after 1 second.If the output load terminal is still short-circuited after 3 attempts, the inverter must be manually restarted after first removing the short-circuit fault from the load before the normal output can be restored.
10	Heat sink over-temperature protection	When the internal temperature of the inverter is too high, the inverter will stop charging and discharging; when the temperature returns to normal, the inverter will resume charging and discharging.
11	Inverter over-load protection	After triggering the overload protection the inverter will resume output after 3 minutes, 5 consecutive overloads will switch off the output until the inverter is restarted. (102%<load<110%) : alarm and output shutdown after 5min; (110% < load < 125%) : alarm and output shutdown after 10s.

Saturn 8-12K LVS series

		Load > 125% : alarm reported and output switched off after 5s.
12	AC output reverse	Prevents AC back flow from the battery inverter to the bypass AC input.
13	Bypass over-current protection	Built-in AC input over-current protection circuit breaker.
14	Bypass phase inconsistency protection	When the phase of the bypass input and the phase of the inverter split do not match, the inverter disables switching to the bypass output to prevent the load from dropping out or short-circuiting when switching to the bypass.
15	Charging short-circuit protection	When the external battery port is short-circuited in the PV or AC charging state, the inverter will protect and stop the output current.
16	Parallel connection error protection	In parallel operation, the equipment will be protected when the parallel line is lost.
17	Parallel battery voltage difference protection	In parallel operation, the equipment will be protected when the battery connection is inconsistent and the battery voltage is greatly different from that detected by the host.
18	Parallel AC voltage difference protection	In parallel operation, the equipment will be protected when the AC IN input connection is inconsistent.
19	Synchronization signal fault protection	The equipment will be protected when there is a fault in the guidance signal between parallel buses, causing inconsistent behavior of each inverter.

8.2 Maintenance

To maintain optimum long-lasting working performance, it is recommended that the following items be checked twice a year.

1. Ensure that the airflow around the inverter is not blocked and remove any dirt or debris from the radiator.
2. Check that all exposed conductors are not damaged by sunlight, friction with other surrounding objects, dry rot, insect or rodent damage, etc. The conductors need to be repaired or replaced if necessary.
3. Verify that the indications and displays are consistent with the operation of the equipment, note any faults or incorrect displays and take corrective action if necessary.
4. Check all terminals for signs of corrosion, insulation damage, high temperatures or burning/discolouration and tighten terminal screws.
5. Check for dirt, nesting insects and corrosion, clean as required,Clean the insect screen regularly.
6. If the lightning arrester has failed, replace the failed arrester in time to prevent lightning damage to the inverter or other equipment of the user.

⚠ DANGER

- Make sure that the inverter is disconnected from all power sources and that the capacitors are fully discharged before carrying out any checks or operations to avoid the risk of electric shock.

The Company shall not be liable for damage caused by :

1. Damage caused by improper use or use in a wrong location.
2. Photovoltaic modules with an open circuit voltage exceeding the maximum permissible voltage.
3. Damage caused by the operating temperature exceeding the restricted operating temperature range
4. Dismantling and repair of the inverter by unauthorised persons.
5. Damage caused by force majeure: damage during transport or handling of the inverter.

Saturn 8-12K LVS series

09 Datasheet

MODEL	Saturn 8K LVS	Saturn 10K LVS	Saturn 12K LVS	Settable
Inverter output				
Rated Output Power	8800W	10,000W	12000W	
Max. Peak Power	17,600VA	20,000VA	24,000VA	
Rated Output Voltage	230Vac（Single phase） (200/208/220/240Vac settable)			Y
Output voltage error	±5%			
Load Capacity of Motors	5HP	6HP	6HP	
Rated AC Frequency	50/60Hz ± 0.3Hz			Y
Waveform	Pure Sine Wave			
Switch Time	10ms（typical）			
Overload	After triggering the overload protection the inverter will resume output after 3 minutes, 5 consecutive overloads will switch off the output until the inverter is restarted. (102%<load<125%): alarm and output shutdown after 5min; (125% < load < 150%) : alarm and output shutdown after 10s. Load > 150% : alarm reported and output switched off after 5s.			
AC OUT（on-grid）				
Rated Output Power	8800W	10,000W	12000W	
Max. Peak Power	8800VA	10,000VA	12000VA	
Power factor	0.8 leading to 0.8 lagging	0.8 leading to 0.8 lagging	0.8 leading to 0.8 lagging	
Rated voltage	220/230Vac	220/230Vac	220/230Vac	
Rated AC Frequency	50/60Hz	50/60Hz	50/60Hz	
Rated AC out current	38.2Aac	43.5Aac	52.2Aac	
THD	<3%	<3%	<3%	
Battery				
Battery Type	Li-ion / Lead-Acid / User Defined			Y
Rated Battery Voltage	48Vdc (minimum start-up voltage 44V)			
Voltage Range	40-60Vdc			
Max. Generator Charging Current	60Adc			Y
Max. Grid Charging Current	120Adc			Y
Max. Hybrid Charging Current	200Adc			Y
PV input				
Num. of MPP Trackers	2			
Max. PV array power	5500W+5500W	5500W+5500W	6600W+6600W	
Max. input current	22/22Adc			
Max.PV Isc	37A/37Adc			
Max. Voltage of Open Circuit	500Vdc			
MPPT Voltage Range	125-425Vdc			

Saturn 8-12K LVS series

Grid / Generator input		
Input Voltage Range	90-280Vac	
Frequency Range	50/60Hz	
Max.AC bypass current	63Aac	
Efficiency		
MPPT Tracking Efficiency	99.9%	
Max Efficiency	97.5%	
European Efficiency	97%	
Protection		
PV Input Lightning Protection	Yes	
Anti-islanding Protection	Yes	
PV StringInput Reverse Polarity Protection	Yes	
Insulation Resistor Detection	Yes	
ResidualCurrent Monitoring Unit	Yes	
OutputOver Current Protection	Yes	
Output Shorted Protection	Yes	
Surge Protection	DC type II/AC type II	
Over Voltage Category	DC type II/AC type III	
Certified specifications		
On-grid standard	EN50549,G99,NRS-097	
Safety	IEC62109-1, IEC62109-2	
EMC	EN61000-6-1, EN61000-6-3, FCC 15 class B	
RoHS	Yes	
Basic data		
Parallel capacity	6	
Operating Temperature Range	-25~60℃,>45℃ derated	
Humidity range	0-100%	
Warranty	5 years	
Noise	<60dB	
Protection Degree	IP65	
Cooling Method	Heat sink + intelligent fan cooling	
Self-consumption	<100W	
Dimensions	670*440*240mm	
Weight	37kg	
Communication port	RS485 / CAN / USB / Dry contact	Y
External Modules （Optional）	Wi-Fi / GPRS	Y

Your project.
Our support.

SALES & SERVICE

Wayton Energy Tech Co., Ltd.
tech@waytonenergy.com
www.waytonenergy.com

For model selection, quotations and service coordination, contact WAYTON.
Manufacturer technical specifications and applicable warranty terms remain unchanged.