Single Phase Hybrid Inverter



USER MANUAL

Saturn 4K LVS Saturn 4.6K LVS
Saturn 5K LVS Saturn 5.5K LVS
Saturn 6K LVS

USER MANUAL

Model:

Saturn 4-6K LVS Series

Contents

01	**Safety**	**02**
1.1	How to use this manual	02
1.2	Symbols in this manual	02
1.3	Safety instructions	02
02	**Production Instructions**	**03**
2.1	Instructions	03
2.2	Features	03
2.3	System connection diagram	04
2.4	Production Overview	05
2.5	Dimension drawing	06
03	**Installation**	**07**
3.1	Select the mount location	07
3.2	Mount the inverter	08
3.3	Remove the terminal cover & wiring	08
04	**Connection**	**09**
4.1	Single-phase output	09
4.2	Cable & circuit breaker requirement	10
4.3	GRID & LOAD & GEN connection	12
4.4	Battery Connection	12
4.5	PV connection	13
4.6	Grounding connection	14
4.7	Final assembly	14
4.8	Inverter Parallel	15
4.8.1	Introduction	15
4.8.2	Precautions for connecting the parallel connecting lines	15
4.8.3	Schematic diagram of parallel connection in single phase	16
4.8.4	Schematic diagram of parallel connection in three phase	19
05	**Operation**	**24**
5.1	Operation and display panel	24
5.2	Setting	28
5.2.1	Basic Setup	28
5.2.2	Work Mode Setup	34
5.2.3	Battery setup	38
5.2.4	Advance Setup	43
5.3	Time-slot charging/discharging function	46
5.4	Battery parameter	47
5.5	Connection Mode	49
06	**Communication**	**51**
6.1	Dry contact	51
6.2	RS485/CAN communication port	52
6.3	DIP switch	52
6.4	WIFI port	52
6.5	USB-A port	52
6.6	USB-B port	53
6.7	Parallel port	53
6.8	DRMS port(only Australia)	53
6.9	External CT port	54
07	**Fault and Remedy**	**55**
7.1	Fault code	55
7.2	Troubleshooting	58
08	**Protection and Maintenance**	**60**
8.1	Protection features	60
8.2	Maintenance	62
09	**Parameter Sheet**	**63**

All information in this manual is subject to copyright and other intellectual property rights of CESC New Energy Technology Co., Ltd. This manual should not be modified, reproduced or copied, in whole or in part. The unauthorized use without prior written permission is strictly prohibited. CESC New Energy Technology Co., Ltd. All rights reserved.

Please read this entire document carefully before installing or using the battery system. Failure to do so or to follow any of the instructions or warnings in this document can result in electrical shock, serious injury or death, can damage battery, potentially rendering it inoperable. Warranty claims are invalid, if damage is caused by human error in a manner inconsistent with the installation manual's instructions.

The information included in this manual is verified by CESC to be accurate at the time of publication. However, due to the continuous improvement of products, this manual is subject to change without prior notice.

The illustrations in this manual are intended to help explain operating system configurations and installation instructions. Any confusion, please contact CESC immediately for advice and clarification. Thank you for your choice and trust.

Saturn 4-6K LVS series

01 Safety

1.1 How to use this manual

- This manual contains important information、guidelines、operation and maintenance for the following products：Saturn 4-6KW LVS series
- The manual must be followed during installation and maintenance.

1.2 Symbols in this document

Symbol	Description
⚠ DANGER	DANGER: indicates a hazardous situations which if not avoided will result in death or serious injury.
⚠ WARING	WARING: indicates a hazardous situations which if not avoided could result in death or serious injury.
⚠ CAUTION	CAUTION: Indicates a hazardous situation which,if not avoided,may result in minor or moderate injury.
ⓘ NOTICE	NOTICE: Provides tips or cues regarding product operation.

1.3 Safety instructions

⚠ WARING

This chapter contains critical safety and operational instructions.Readthem thoroughly and retain this manualfor future reference.

- This chapter contains important safety instructions. Read and keep this manual for future reference.
- Be sure to comply the local requirements and regulation to install this inverter.
- Beware of high voltage. Please turn off the switch of each power sources before and during the installation to avoid electric shock.
- For optimum operation of this inverter, please follow required specification to select appropriate cable size and necessary protective device.
- Do not connect or disconnect any connections when the inverter is working.
- Do not open the terminal cover when the inverter working.
- Make sure the inverter is well grounding.
- Never cause AC output and DC input short circuited.
- Do not disassembly this unit, for all repair and maintenance, please take it to the professional service center.
- Never charge a frozen battery.
- Please keep children away from touching or mishandling the inverter.
- Please make sure that this inverter is the only input power source for the load, do not use it in parallel with other input AC power sources to avoid damage.

02 Production Instructions

2.1 Instructions

Saturn series is a new type of solar energy storage inverter control inverter integrating solar energy storage & utility charging and energy storage, AC sine wave output. It adopts DSP control and features high response speed, reliability, and industrial standard through an advanced control algorithm.

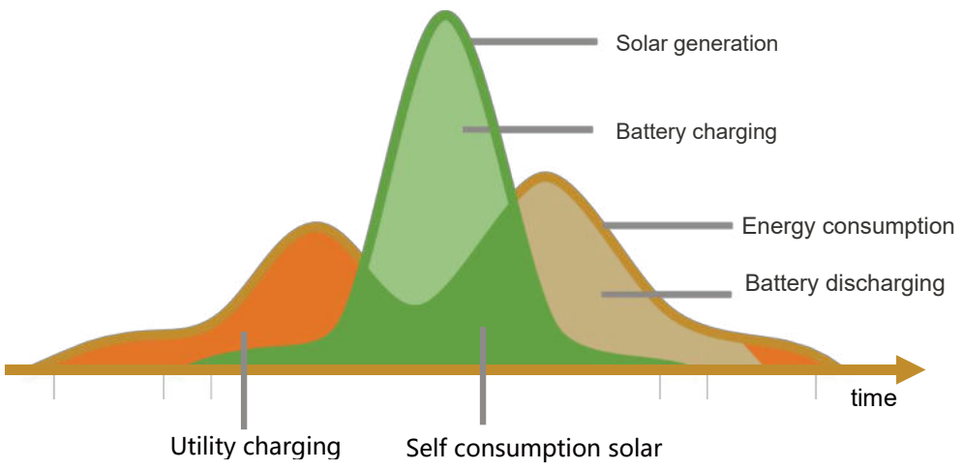

2.2 Features

- Supports the connection of various types of energy storage batteries such as lead-acid batteries and lithium-ion batteries.
- Smart load function.
- AC coupling function.
- With a dual activation function when the li-ion battery is dormant; either mains/photovoltaic power supply access can trigger the activation of the li-ion battery.
- Support single-phase pure sine wave output.
- Supports single-phase voltage adjustment within the range of 200, 208, 220, 230, and 240Vac.
- Supports two solar inputs and simultaneous tracking of two solar maximum power charging/carrying capacity functions.
- Dual MPPT with 99.9% efficiency and maximum 16A current in a single circuit, perfectly adapted to high power modules.
- 2 charging modes are available: solar only, mixed mains/PV charging.
- With the time-slot charging and discharging setting function, you can set the time period for cutting in/out of mains charging and switch the time period between battery discharging and grid bypass power supply mode.
- Energy saving mode function to reduce no-load energy losses.
- With two output modes of utility bypass and inverter output, with uninterrupted power supply function.
- LCD large screen dynamic flow diagram design, easy to understand the system data and operation status.
- 360° protection with complete short circuit protection, over current protection, over under voltage protection, overload protection, backfill protection, etc.
- Support CAN, USB, and RS485 communication.

Saturn 4-6K LVS series

2.3 System connection diagram

The diagram below shows the system application scenario of this product. A complete system consists of the following components:

- **PV modules:** converts light energy into DC energy, which can be used to charge the battery via an inverter or directly inverted into AC power to supply the load.
- **Grid or generator:** connected to the AC input, it can supply the load and charge the battery at the same time. The system can also operate generally without the mains or generator when the battery and the PV module power the load.
- **Battery:** The role of the battery is to ensure the regular power supply of the system load when the solar energy is insufficient and there is no mains power.
- **Home load:** Various household and office loads can be connected, including refrigerators, lamps, televisions, fans, air conditioners, and other AC loads.
- **Inverter:** The energy conversion device of the whole system.

The actual application scenario determines the specific system wiring method.

System Wiring Diagram 1

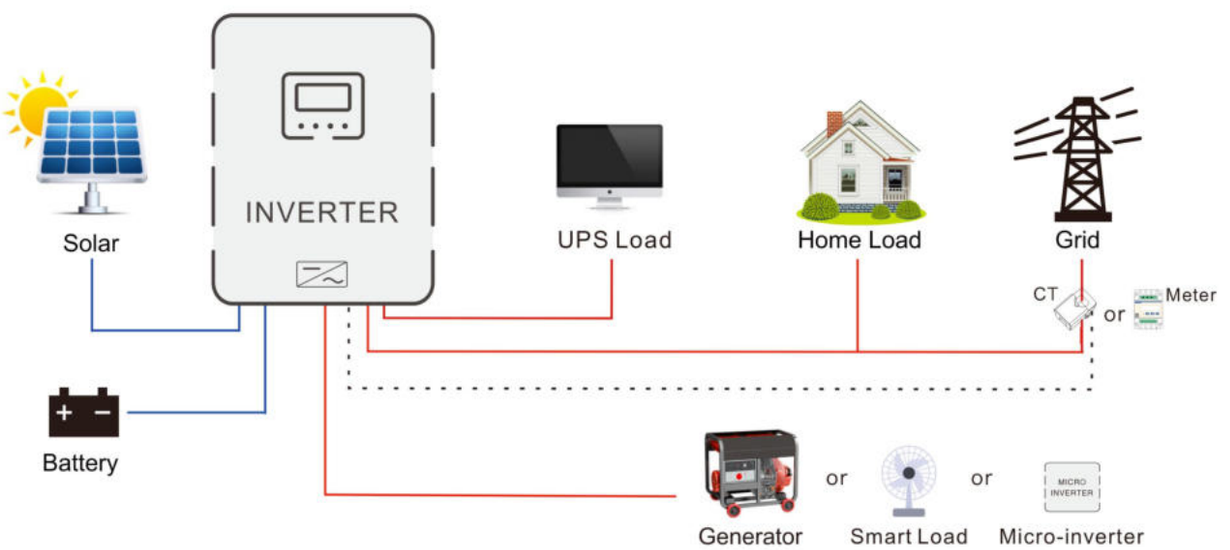

System Wiring Diagram 2

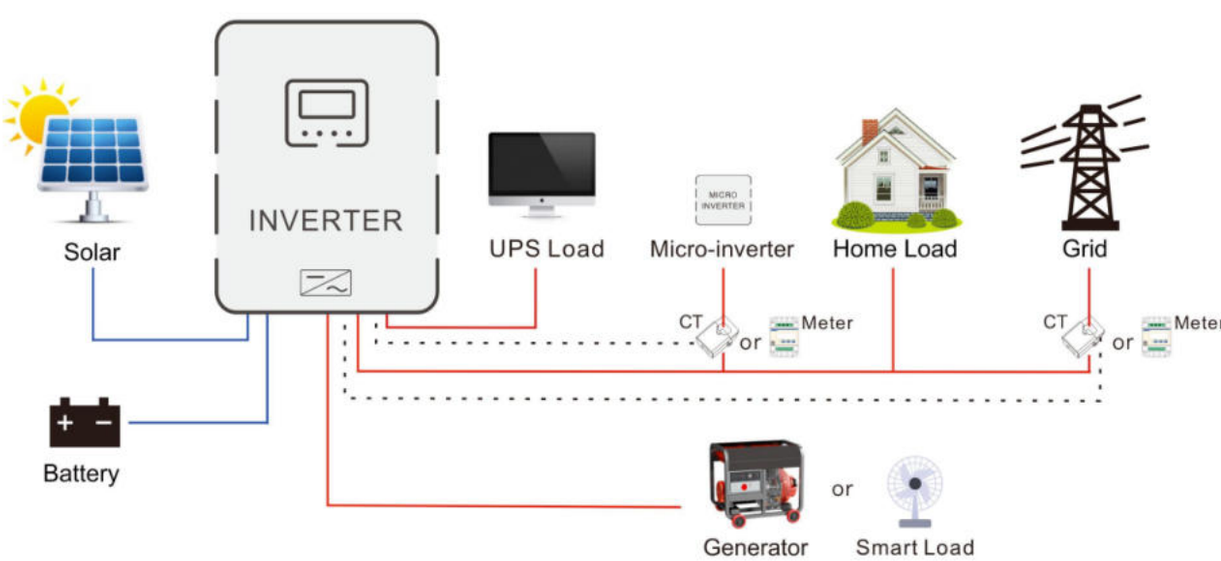

4

2.4 Production Overview

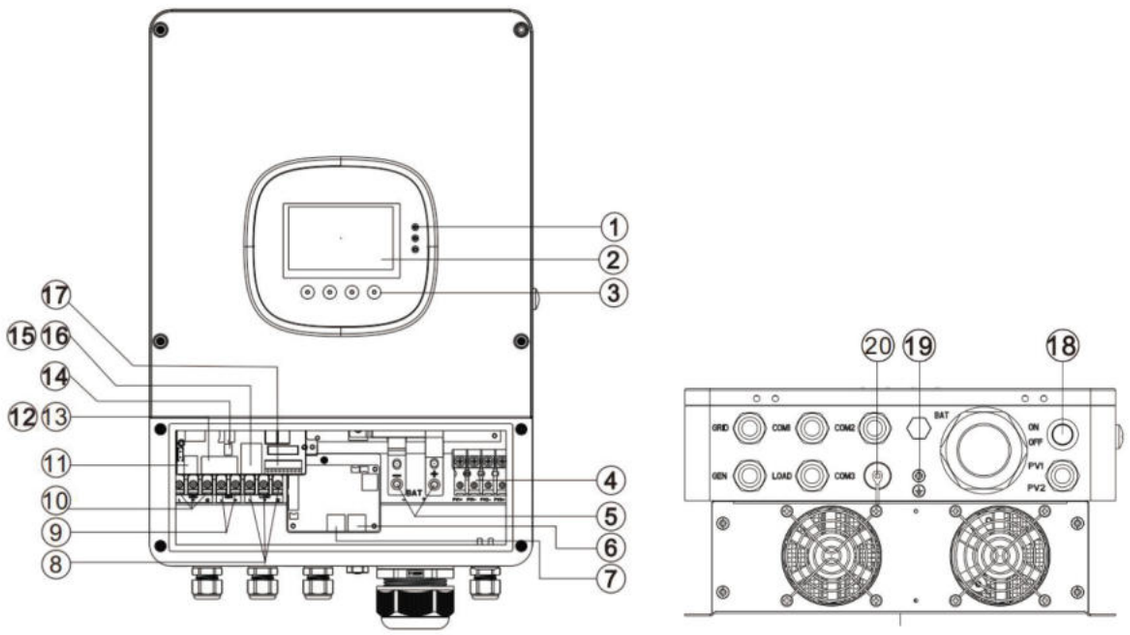

1	LED Indicators	11	USB-B port
2	LCD screen	12	RS485/CAN port
3	Button	13	DRMS port
4	PV1/PV2 ports	14	DIP switch
5	Battery ports	15	WIFI port
6	Parallel communication A port	16	USB-A port
7	Parallel communication B port	17	Dry contact
8	LOAD ports	18	ON/OFF switch
9	Gtenerator ports	19	Grounding screw
10	Grid ports	20	WIFI port 2

Saturn 4-6K LVS series

2.5 Dimension drawing

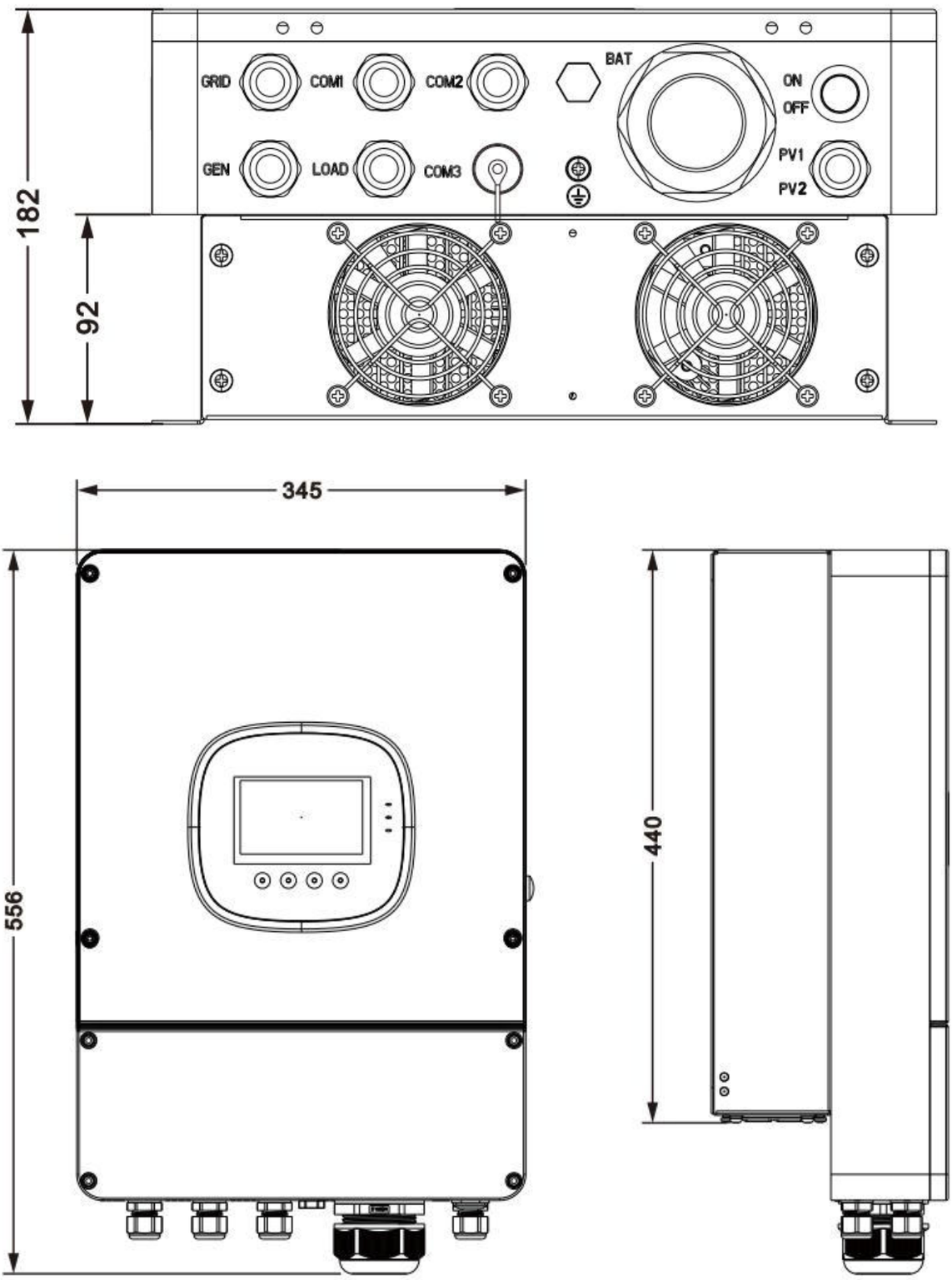

6

03 Installation

3.1 Installation contents

		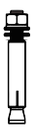	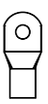
Inverter x 1	Flash drive ×1	Expansion screws M8*60 ×4	SC35-6 terminal block ×2
		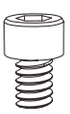	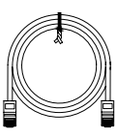
L-shaped hex wrench x 1	Phillips combination screws/Flange screws x 2	Hexagon socket screw x 1	Parallel communication line x 1
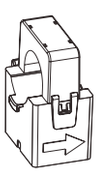	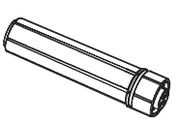	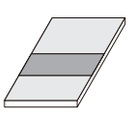	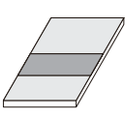
Extternal CT x 1	Wifi port x 1	Quick Installation Guide x 1	Certificate/ Warranty card x 1

3.2 Tools & Instruments prepared (not supplied)

The following tools shall be prepared before installation.

No.	Tools	Description	Function	Specifications
1		Percussion drill	Wall drilling	/
2		Screwdriver	Removing, installing screws and wiring	5mm&6mm
3		Hex Key Wrench	Tighten or remove bolts/nuts	10mm&13mm
4		Marking pen	Drilling mark	/
5		Gradienter	Ensure horizontal installation	/
6		Hammer Head	Drive in nails/screws, align parts, or loosen stuck items	/

3.3 Select the mount location

Saturn series can be used outdoors (protection class IP65). Please consider the followings before selecting the location:

- Choose the solid wall to install the inverter.
- Mount the inverter at eye level.
- Adequate heat dissipation space must be provided for the inverter.
- The ambient temperature should be between-25~60℃（-13~140 ℉） to ensure optimal operation.

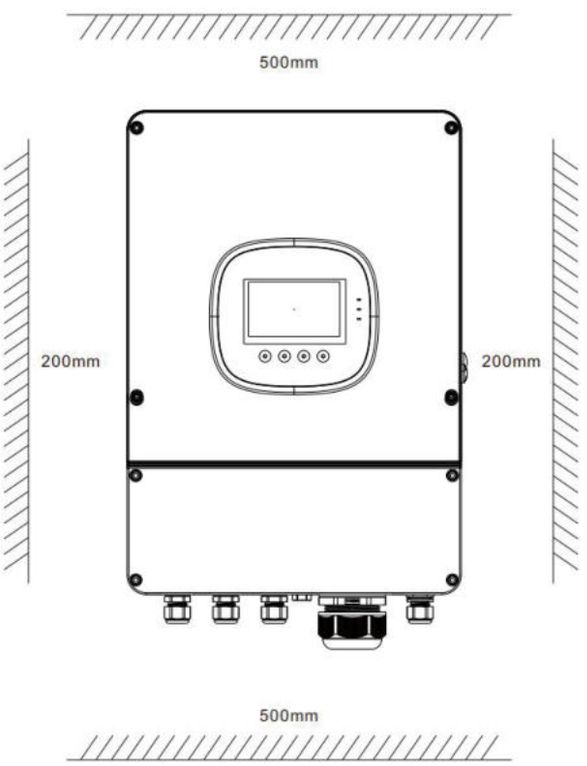

⚠ DANGER

- Never install the inverter near flammable materials.
- Do not install the inverter in potential explosive areas.
- Do not install the inverter with lead-acid batteries in a confined space.

⚠ CAUTION

- Do not install the inverter in direct sunlight.
- Do not install or use the inverter in a humid environment.

Saturn 4-6K LVS series

3.4 Mount the inverter

Punch 4 mounting holes in the wall with an electric drill according to the specified size, and insert 4 M8*60 expansion screws above.

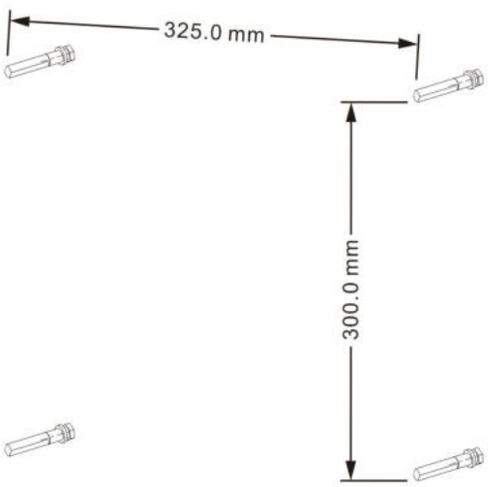

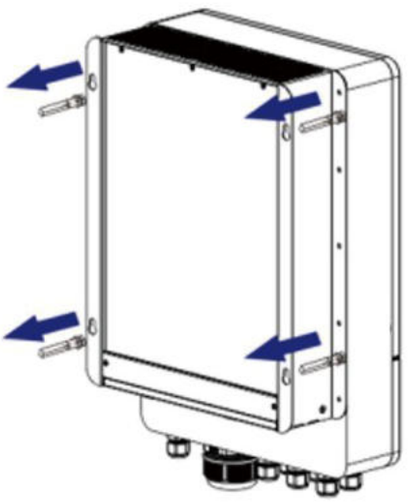

3.5 Remove the terminal cover & wiring

Using a screwdriver, remove the terminal protection cover and anti-insect net.

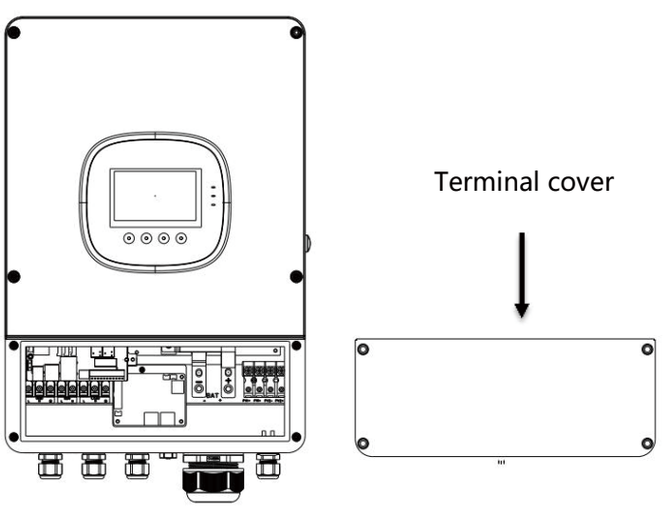

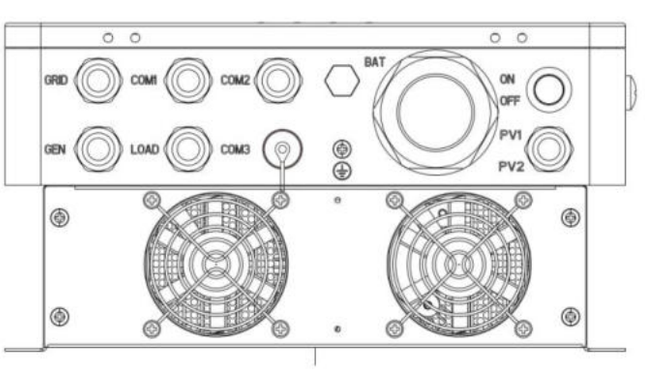

04 Connection

4.1 Single-phase output

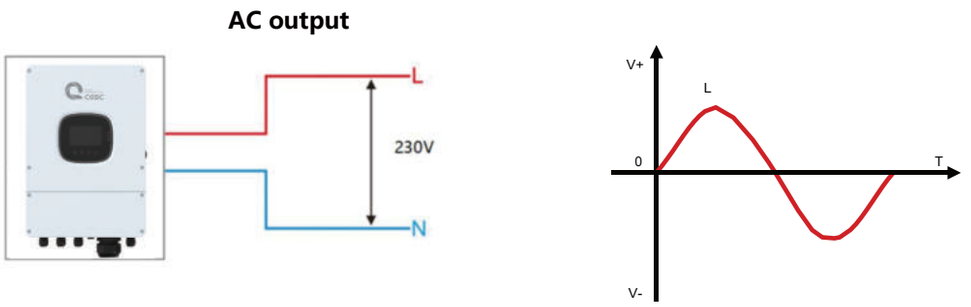

Items	Description
Applicable Model	Saturn series S model
Output Voltage Range (L-N)	200-240Vac, 230Vac default

NOTICE

- Users can change the output phase mode and output voltage by setup menu. Please read the chapter 5.2 Setting.
- The output voltage can be set from 200V to 240V.

4.2 Cable & circuit breaker requirement

- **PV INPUT**

Model	Cable Diameter	Max. PV Input Current	Circuit Breaker Spec
Saturn 4K LVS	4mm²/12AWG	16A/16A	2P—25A
Saturn 4.6K LVS	4mm²/12AWG	16A/16A	2P—25A
Saturn 5K LVS	4mm²/12AWG	16A/16A	2P—25A
Saturn 5.5K LVS	4mm²/12AWG	16A/16A	2P—25A
Saturn 6K LVS	4mm²/12AWG	16A/16A	2P—25A

- **Grid**

Model	Cable Diameter	Max.input current	Circuit Breaker Spec
Saturn 4K LVS	8mm²/8AWG	40A	2P—40A
Saturn 4.6K LVS	8mm²/8AWG	40A	2P—40A
Saturn 5K LVS	8mm²/8AWG	40A	2P—40A
Saturn 5.5K LVS	8mm²/8AWG	40A	2P—40A
Saturn 6K LVS	8mm²/8AWG	40A	2P—40A

- **Generator**

Model	Cable Diameter	Max. Input Current	Circuit Breaker Spec
Saturn 4K LVS	8mm²/8AWG	40A	2P—40A
Saturn 4.6K LVS	8mm²/8AWG	40A	2P—40A
Saturn 5K LVS	8mm²/8AWG	40A	2P—40A
Saturn 5.5K LVS	8mm²/8AWG	40A	2P—40A
Saturn 6K LVS	8mm²/8AWG	40A	2P—40A

- **Battery**

Model	Cable Diameter	Max. Battery discharge Current	Max.battery charge current	Circuit Breaker Spec
Saturn 4K LVS	35mm²/2AWG	100A	100A	2P-160A
Saturn 4.6K LVS	35mm²/2AWG	118A	100A	2P-160A
Saturn 5K LVS	35mm²/2AWG	125A	100A	2P-200A
Saturn 5.5K LVS	35mm²/2AWG	130A	100A	2P-200A
Saturn 6K LVS	35mm²/2AWG	135A	100A	2P-200A

- **LOAD**

Model	Cable Diameter	Output current	Circuit Breaker Spec
Saturn 4K LVS	8mm²/8AWG	17.4A	2P-40A
Saturn 4.6K LVS	8mm²/8AWG	20A	2P-40A
Saturn 5K LVS	8mm²/8AWG	24A	2P-40A
Saturn 5.5K LVS	8mm²/8AWG	24A	2P-40A
Saturn 6K LVS	8mm²/8AWG	26A	2P-40A

NOTICE

PV INPUT、AC INPUT、AC OUTPUT 1. Use a stripper to remove the 6~8mm insulation of the cable. 2. Fixing a ferrule at the end of the cable. (ferrule needs to be prepared by the user)	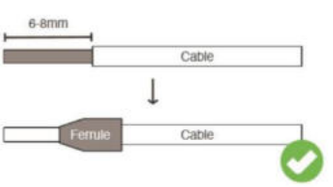
BATTERY 1. Use a stripper to remove the 6~8mm insulation of the cable 2. Fixing cable lugs that supply with the box at the end of the cable.	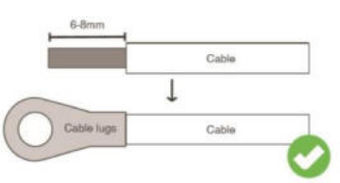

Saturn 4-6K LVS series

4.3 GRID & LOAD & GEN connection

Connect the energized conductor,neutral and grounding wires in the cable location and sequence shown in the diagram below.

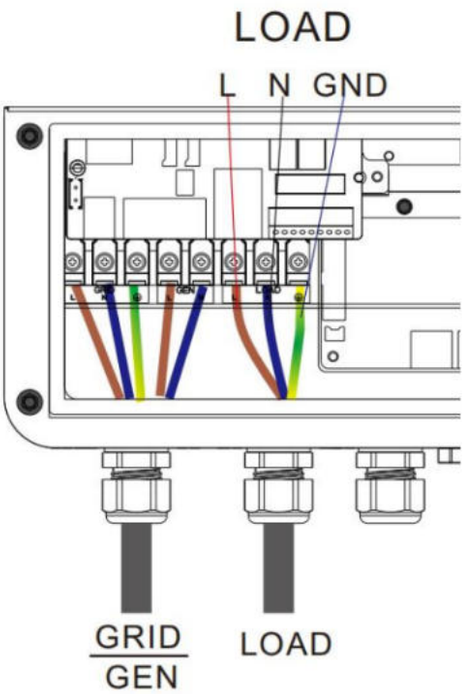

⚠ DANGER

- Before connecting AC inputs and outputs, the circuit breaker must be opened to avoid the risk of electric shock and must not be operated with electricity.
- Please check that the cable used is sufficient for the requirements, too thin, poor quality cables are a serious safety hazard.

4.4 Battery Connection

Connect the positive and negative cable of the battery according to the diagram below.

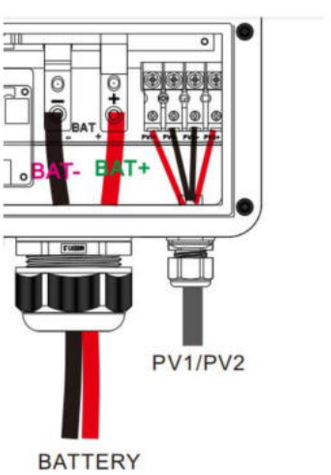

⚠ DANGER

- Before connecting battery,the circuit breaker must be opened to avoid the risk of electric shock and must not be operated with electricity.
- Make sure that the positive and negative terminals of the battery are connected correctly and not reversed, otherwise the inverter may be damaged.
- Please check that the cable used is sufficient for the requirements, too thin, poor quality cables are a serious safety hazard.serious safety hazard.

4.5 PV connection

Connect the positive and negative wires of the two strings of PV according to the diagram below.

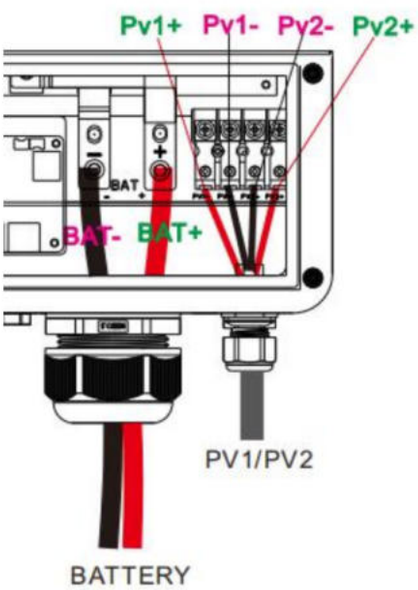

⚠ DANGER

- Before connecting PV, the circuit breaker must be opened to avoid the risk of electric shock and must not be operated with electricity.
- Please make sure that the open circuit voltage of the PV modules in series does not exceed the **Max. Open Circuit Voltage** of the inverter (this value is 500V), otherwise the inverter may be damaged.
- PV1 and PV2 must be independent and must not be used in a mixed manner; otherwise, the inverter will be damaged.

4.6 Grounding connection

Please make sure the grounding terminal connect to the Grounding Bar.

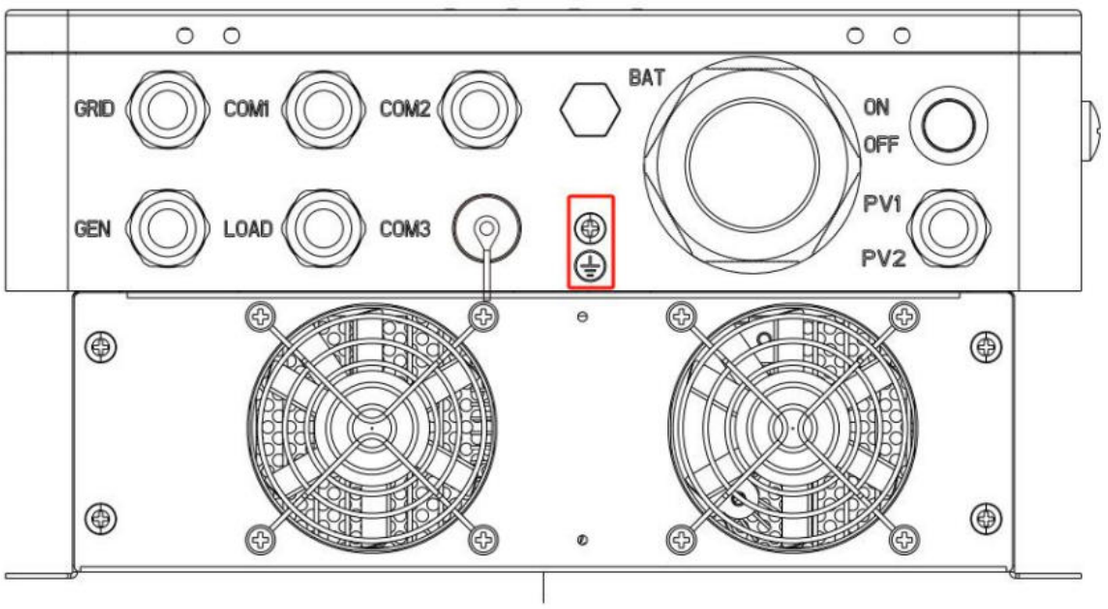

NOTICE

- The grounding cable should have a diameter of not less than 4 mm² and be as close as possible to the grounding point.

4.7 Final assembly

After ensuring that the wiring is reliable and the wire sequence is correct, install the terminal protection cover in place.

- **Step 1** : Close the circuit breaker of the battery.
- **Step 2**: Press the rocker switch on the bottom of inverter, the screen and indicators light up to indicate that the inverter has been activated.
- **Step 3**: Sequential close of the circuit breakers for PV, AC input and AC output.
- **Step 4**: Start the loads one by one in order of power from small to large

Inverter commissioning

- Step 1: Change the password (refer to section 5.2.1.3)
- Step 2: Select the Grid standard (refer to section 5.2.1.4)
- Step 3: Choose the appropriate working mode (refer to section 5.2.2).

4.8 Inverter Parallel

4.8.1 Introduction

1. Up to six units connected in parallel.
2. When using the parallel operation function, the following connecting lines (package accessories) shall be firmly and reliably connected:
3. Dip switches 1 and 2 of the first and last inverters must be put down when inverters are in parallel.

Dip switchs



Parallel communication line*1:

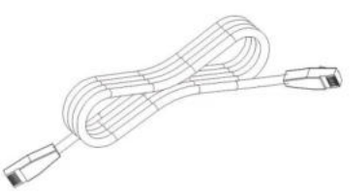

4.8.2 Precautions for connecting the parallel connecting lines

Warning:

1. PV connection:

When connected in parallel, the PV arrays of each machine must be independent and the PV arrays of PV1 andPV2 of each machine must also be independent.

2. Battery wiring:

Parallel connection in single or three-phase: ensure that all solar storage inverters are connected to the same battery, with BAT + connected to BAT + , BAT - connected to BAT -, and that the connection is correct with the same wiring length and line diameter before power on, so as to avoid the abnormal operation of parallel system output caused by wrong connection.

3. LOAD wiring:

Parallel connection in single phase: ensure L-to-L, N-to-N and PE-to-PE connection for all solar storage inverters, and that the connection is correct with the same wiring length and line diameter before power on, so as to avoid the abnormal operation of parallel system output caused by wrong connection. For specific wiring, please refer to Wiring Diagram. Parallel connection in three-phase: ensure N-to-N and PE-to-PE connection for all solar storage inverters. The L lines of all inverters connected to the same phase need to be connected together. But L lines of different phases cannot be joined together. Other connection precautions are the same as parallel connection in single phase. For specific wiring, please refer to Wiring Diagram.

4. GRID wiring:

Parallel connection in single phase: ensure L-to-L, N-to-N and PE-to-PE connection for all solar storage inverters, and that the connection is correct with the same wiring length and line diameter before power on, so as to avoid the abnormal operation of parallel system output caused by wrong connection. Meanwhile, it is not allowed to have multiple different AC source inputs to avoid damage to the external equipment of the inverter. The consistency and uniqueness of AC source input shall be ensured. For specific wiring, please refer to Wiring Diagram.

Parallel connection in three-phase: ensure N-to-N and PE-to-PE connection for all solar storage inverters. The L lines of all inverters connected to the same phase need to be connected together. But L lines of different phases cannot be joined together. Other connection precautions are the same as parallel connection in single phase. For specific wiring, please refer to Wiring Diagram.

5. **Wiring of parallel communication line:**
Our parallel communication cable is a shielded 8Pin network connection cable, which can be used for single-phase or three-phase parallel connection. Each machine must be connected with one out and one in. This means that the machine "Parallel_A" is connected to the machine to be parallelized "Parallel_B", and that the machine "Parallel_A" is not allowed to connect to the "Parallel_B". "Parallel_B" or "Parallel_A" is connected to the machine to be parallelized "Parallel_A". At the same time, the parallel communication cable of each machine should be fastened with 8Pin network connection cable to avoid disconnection or poor contact of the parallel communication cable, which may cause abnormal operation or damage to the system output.

6. Before and after connecting the system, please check the following system wiring diagrams in detail to ensure that all wiring is correct and reliable before powering on.

7. After the system is wired, powered on and in normal operation, if a new inverter needs to be connected, make sure to disconnect the battery input, PV input, AC input and AC output, and that all solar storage inverters are powered off before reconnecting into the system.

4.8.3 Schematic diagram of parallel connection in single phase

1. The parallel communication line of the solar storage inverter need to be locked with screws after connecting.

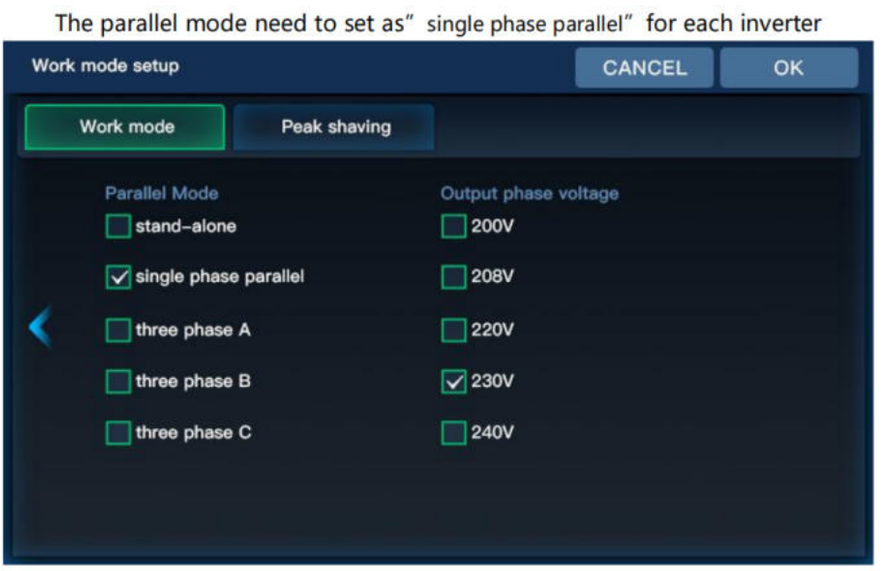

2. In case of parallel operation with multiple inverters, the schematic diagram of parallel connection is as follows:

a) Two units connected in parallel:

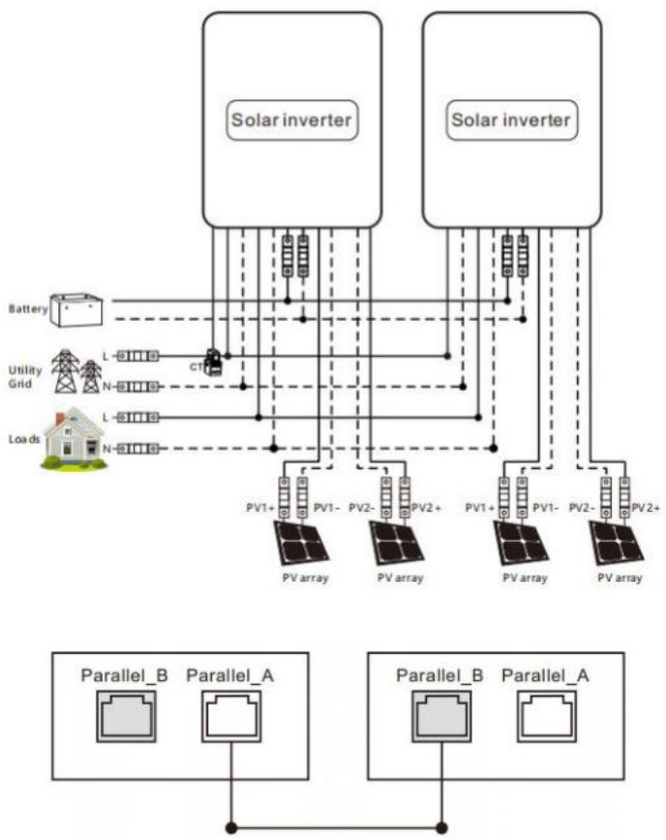

b) Three units connected in parallel:

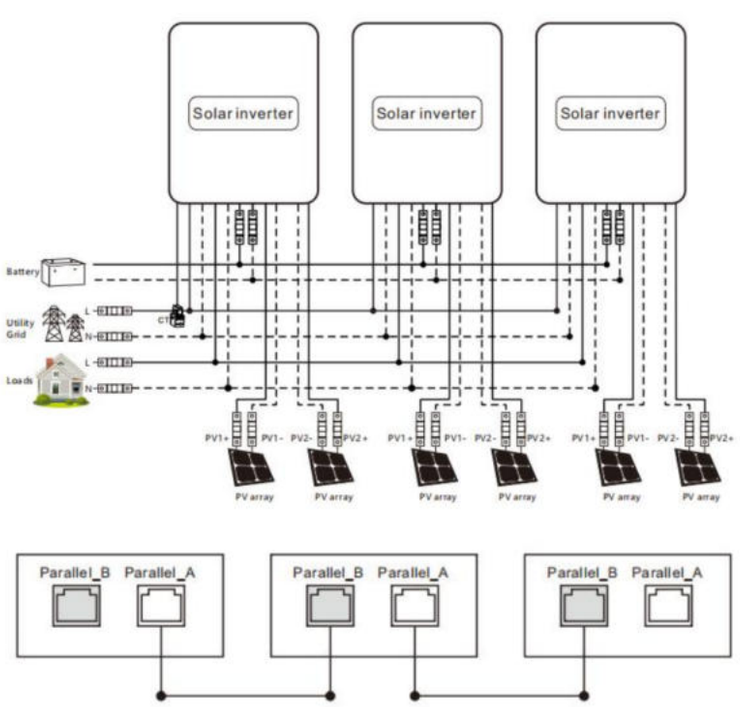

Saturn 4-6K LVS series

c) Four units connected in parallel:

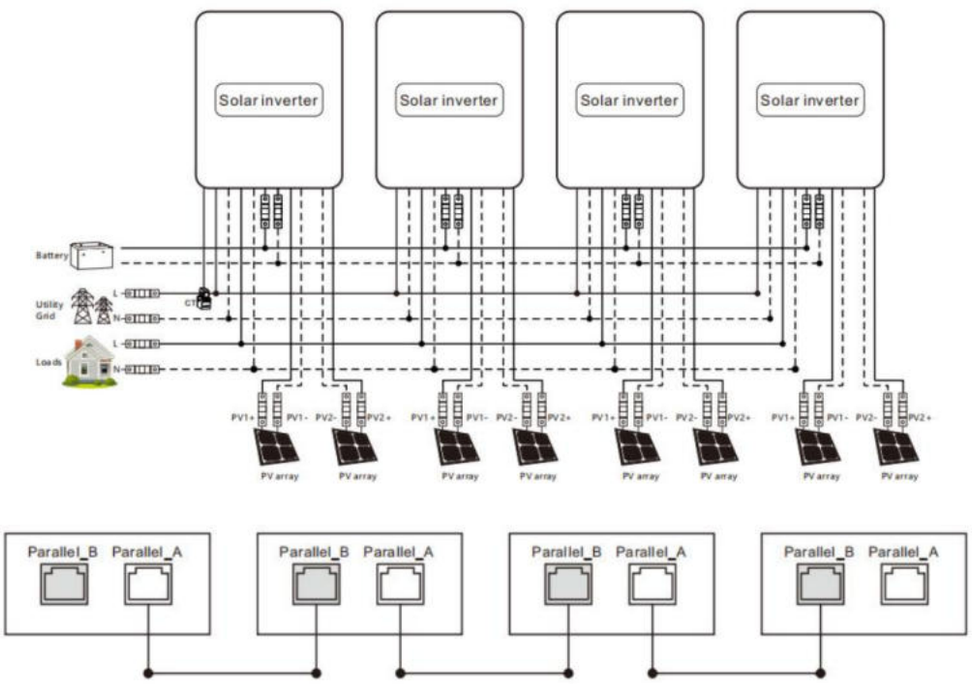

d) Five units connected in parallel:

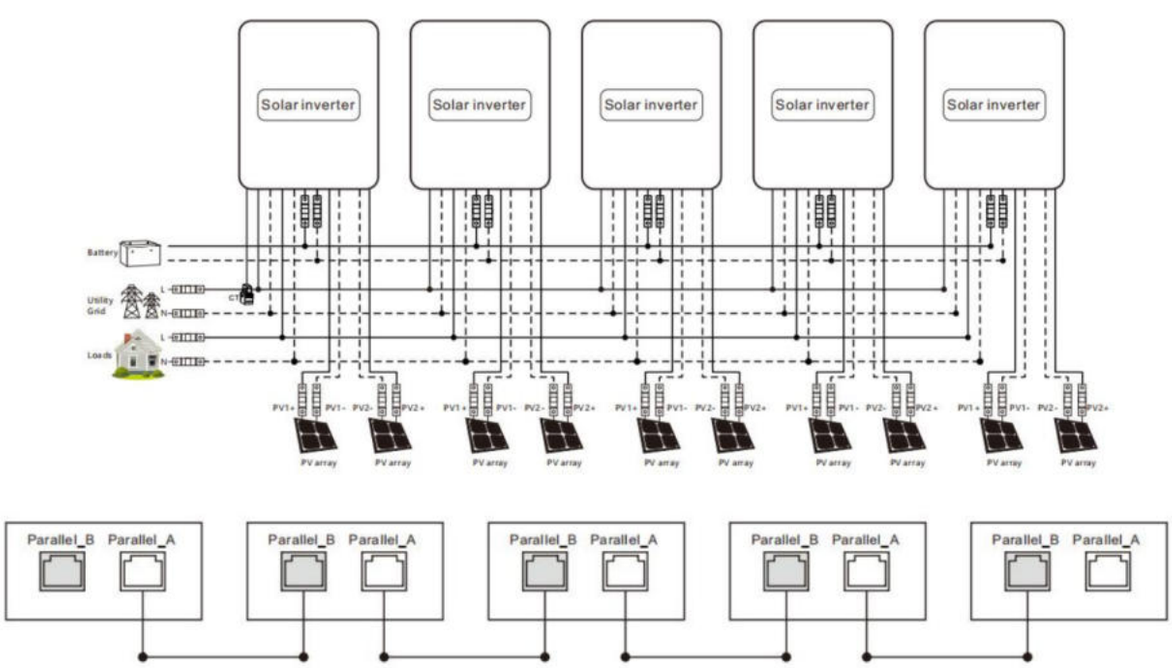

20

e) Six units connected in parallel:

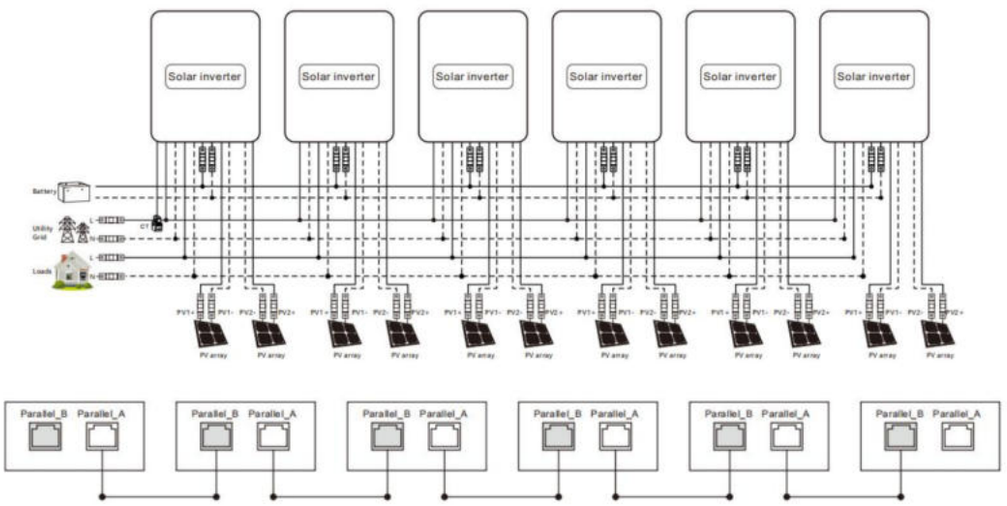

4.8.4 Schematic diagram of parallel connection in three phase

1. The parallel communication line and current sharing detection line of the solar storage inverter need to be locked with screws after connecting.

2. In case of parallel operation with multiple inverters, the schematic diagram of parallel connection is as follows:

Parallel Operation in three phase :

All inverters in P1 must be set as [three phase A]
All inverters in P2 must be set as [three phase B]
All inverters in P3 must be set as [three phase C]
When the output phase voltage is 230Vac, at present the line voltage between the live wire L1 in phase 1 and the live wire L2 in phase 2 is 230*1.732 = 398Vac, and similarly the line voltage.

P1 inverters setting

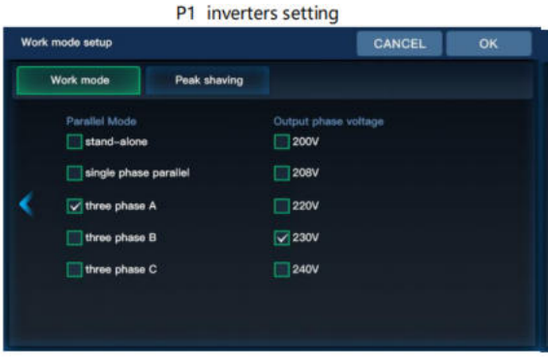

P2 inverters setting

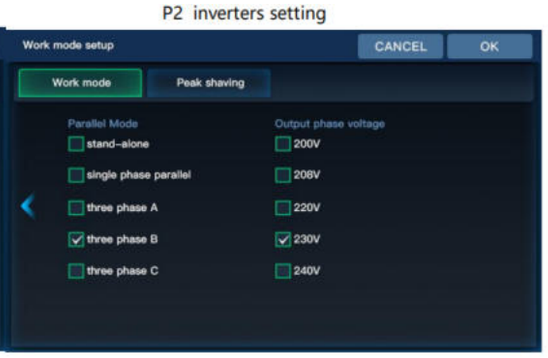

P3 inverters setting

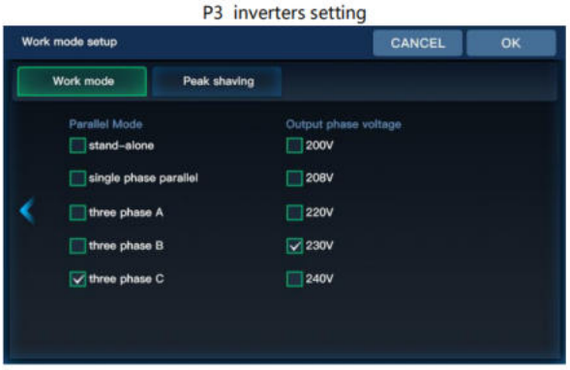

Saturn 4-6K LVS series

a) Three units connected in three phase:
1+1+1 system:

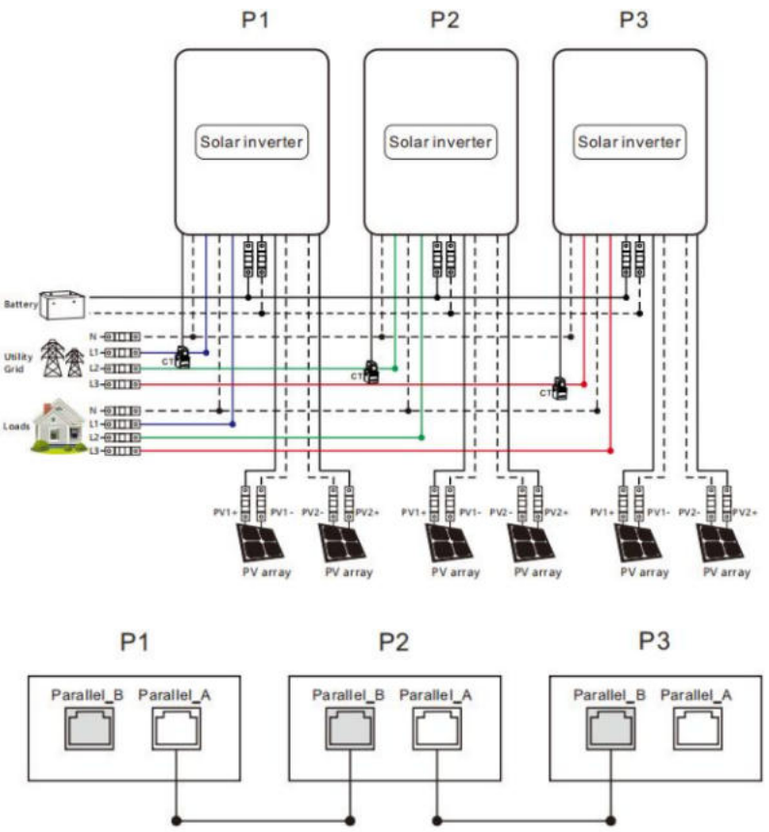

b) Four units connected in three phase:
2+1+1 system:

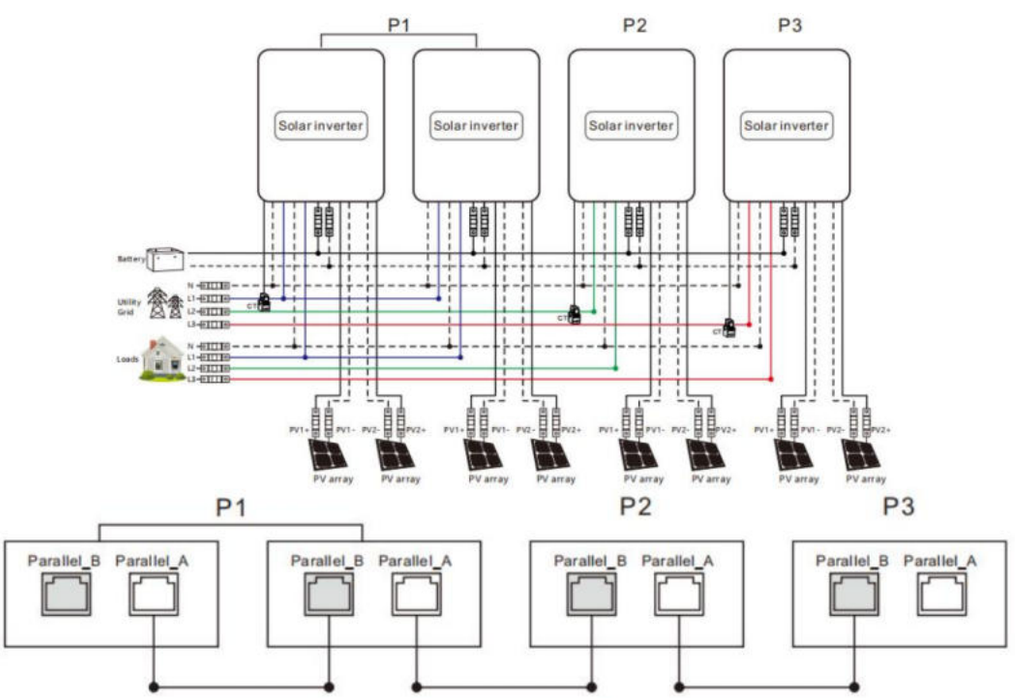

c) Five units connected in three phase:
3+1+1 system:

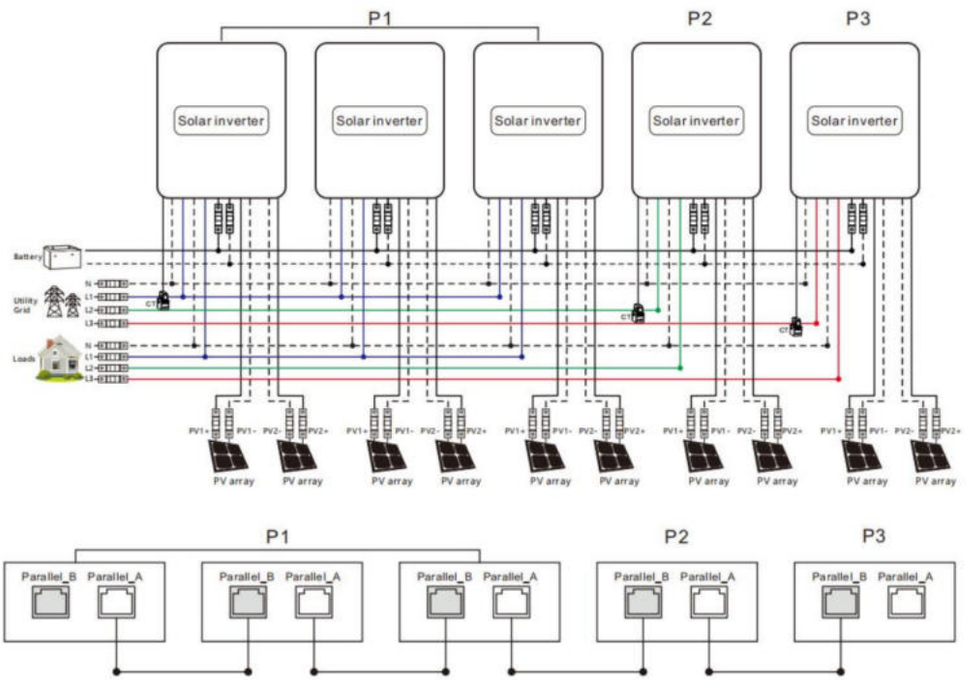

2+2+1 system:

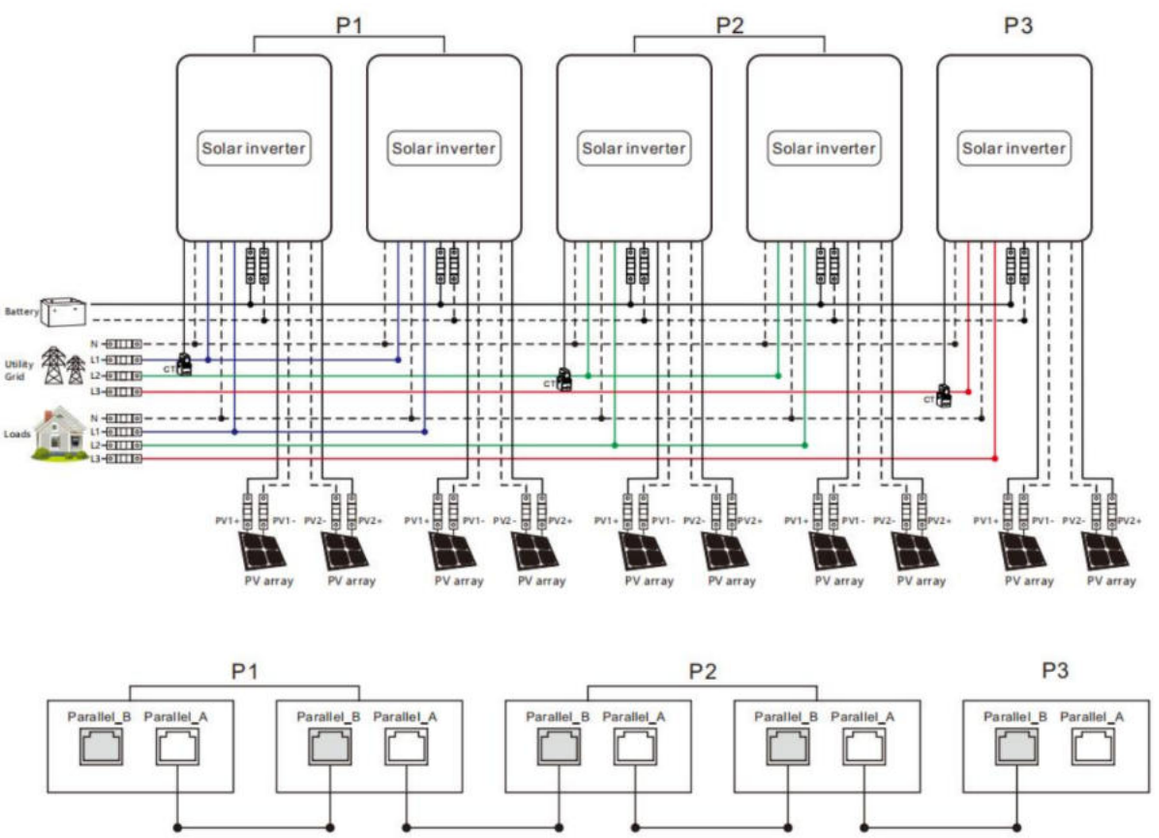

Saturn 4-6K LVS series

d) Six units connected in three phase:
2+2+2 system:

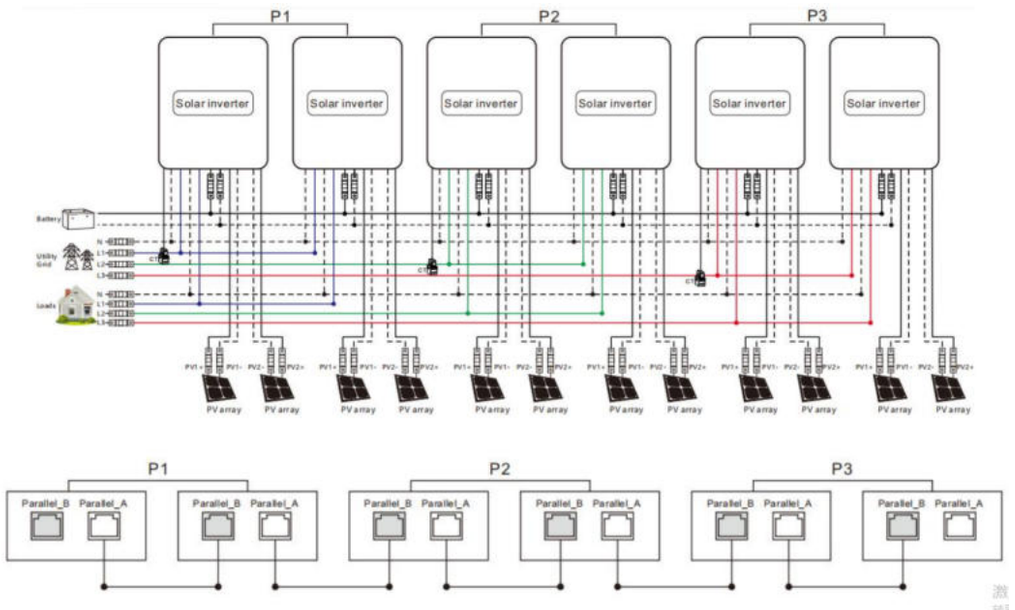

3+2+1 system:

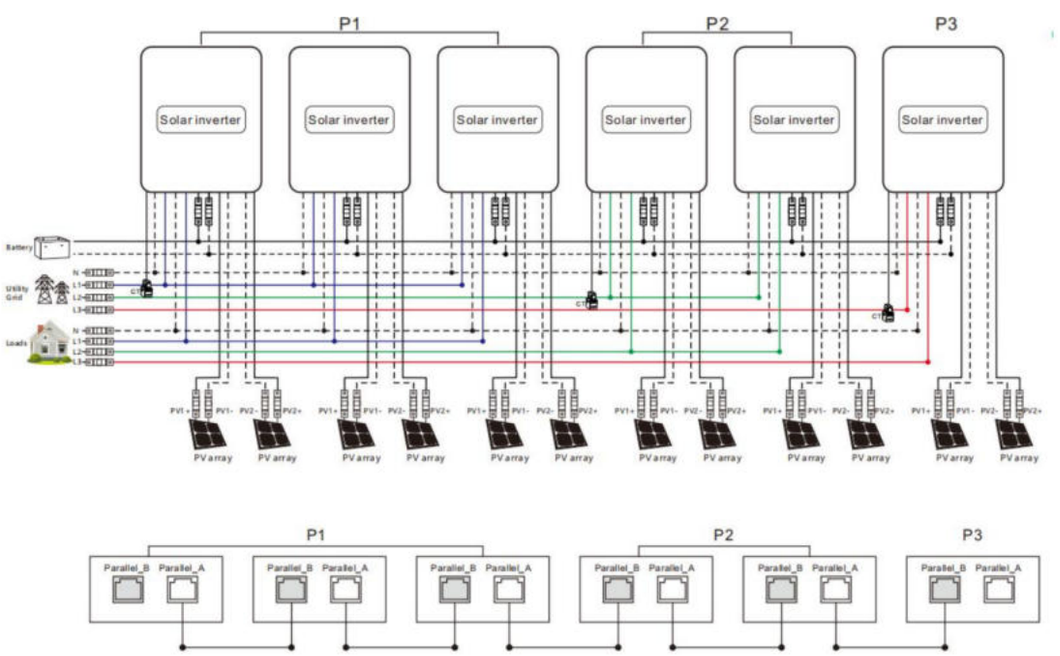

4+1+1 system:

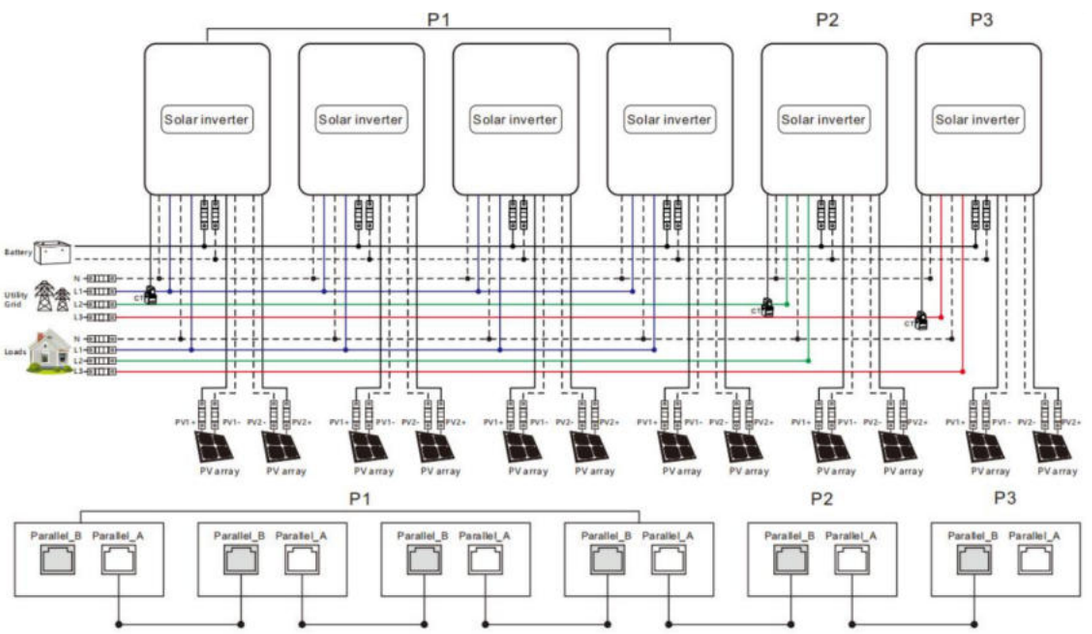

Note:

1) Before starting up and running, please check whether the connection was correct to avoid any abnormalities in the system.

2) All wiring must be fixed and reliable to avoid wire drop during use.

3) When the AC output is wired to the load, it shall be properly wired according to the requirements of the electrical load equipment to avoid damage to the load equipment.

4) Setting item “output phase voltage setting”needs to be set consistently or only for the master. When paralleling, the voltage set by the master will prevail, and the master will be forced to rewrite the rest of the slaves to be consistent. This option can be set in standby mode only.

5) Machine factory default for single machine mode, if you use parallel or three-phase function, you need to set the”Parallel mode “ item parameters through the screen. The setting method is: power on one machine at a time, the rest of the machine off, and then set the ”Parallel mode “ item parameters according to the site system operation mode. After this machine is set successfully, turn off the machine switch and wait for the machine to be powered down, then set the rest of the machines in turn until all machines are set, and then all machines are powered up again at the same time and enter the working state.

6) After the system runs, the output voltage is measured correctly, and then the load setting is connected.

Saturn 4-6K LVS series

05 Operation

5.1 Operation and display panel

The operation and display panel below includes 1 LCD screen, 3 indicators, 4 physical buttons.

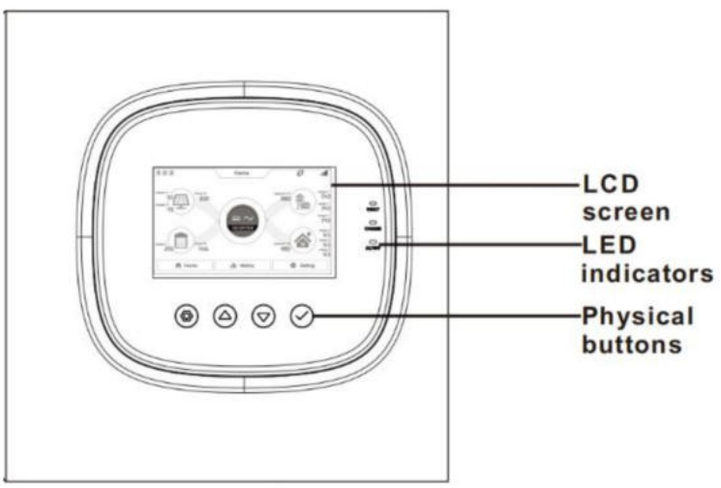

- Buttons

Buttons	Description
	To enter/exit the setting menu
	To last selection
	To next selection
	To confirm/enter the selection in setting menu

- LED Indicators

Indicators	Color	Description
FAULT	Red	Flash: error occur
CHARGE	Green	Continued: charging complete
		Flash: charging
AC/INV	Yellow	Continued: utility grid by-pass output
		Flash: inverter output

- Display panel



Icon	Description	Icon	Description
	Solar panel		Load
	Battery		Grid
Home	Home page		Inverter is Working
History	History data	Setting	Setting
0 :0 :0	Local time		The buzzer is slient
	Indicates that the machine is currently in energy-saving mode.		The enery direction
UPS	UPS load (connected to inverter load port)	**HOME**	HOME load (connected to grid port)
	Smart Load		Generator port

Saturn 4-6K LVS series

- **View real-time data**

On the LCD home screen, click the inverter icon, battery icon, mains icon, load icon and photovoltaic icon to view the real-time data of the machine.

System data			
No.	**Item**	**No.**	**Item**
1	Machine state	9	SN code
2	MCU1 version	10	Min version number
3	LCD version	11	Rated power
4	MCU2 version	12	RS485 Address
5	Outside Temperature	13	Transformer temperature
6	PV temperature	14	Inverter temperature
7	Inverter Voltage	15	Inverter Current
8	Customer ID	16	Total busbar voltage
Battery data			
1	SOH	6	Discharge current
2	SOC (Percentage of remaining battery capacity)	7	BMS protocol
3	Battery voltage	8	Battery type
4	Charge current	9	Battery Charge Status
5	Battery power (Battery charging and discharging power)		
Grid data			
1	Voltage	5	Current
2	active power	6	apparent power
3	Frequency	7	Mains charging current
4	CT power		
Load data			
1	Voltage	4	Current
2	UPS load active power	5	UPS load apparent power
3	Frequency	6	load rate

PV data			
1	PV1 voltage	5	PV2 current
2	PV1 current	6	PV2 power
3	PV1 power	7	PV total power
4	PV2 voltage		

Click on the history button in the menu bar below to access the historical data and view various types of historical data.

Today data			
1	Battery charging energy	6	Load consumption energy from grid
2	Battery discharging energy	7	On grid energy
3	Solar generated energy	8	Gen discharging capacity
4	Load consumption energy	9	Gen charging capacity
5	Grid charging energy	10	Home load consumption energy
History			
1	PV generation last seven days history	4	Mains charge eneryfor last 7 days
2	Battery charging enery for last 7 days	5	Load consumption eneryfor last 7 days
3	Battery discharge for last 7 days	6	Load consumption from the grid for last 7 days
Energy Statistics			
1	Total Battery Charging Energy		Total on grid energy
2	Total solar generated energy		Total load consumption energy from grid
3	Total battery disharging energy		Total gen discharging capacity
4	Total load consumption energy		Total gen charging capacity
5	Total mains charging energy		Total home load consumption energy
Historical faults			

5.2 Setting

Operating instructions: Click "Settings" in the menu bar at the bottom of the screen to enter the settings interface.It includes five categories of settings: Basic Settings,Working Mode Settings,Battery Settings,Grid-connection Settings,and Advanced Settings.

5.2.1 Basic Setup

5.2.1.1 Display Setup

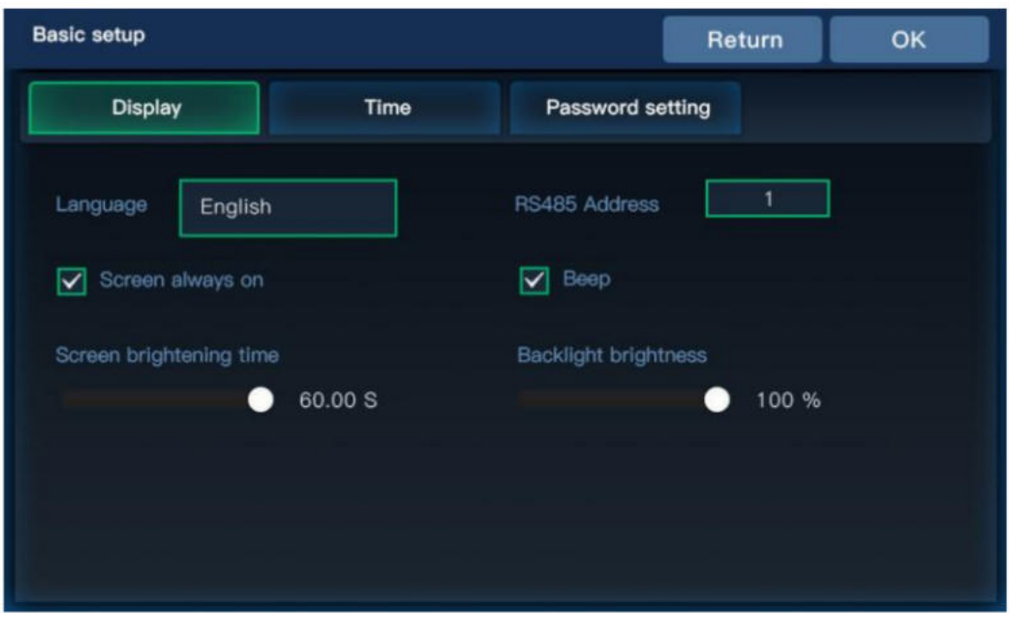

Parameter Meaning	Description
Language	English,Italia,Deutschland,Espana,Chinese,Polski.
RS485 Address	This refers to the RS485 address of the inverter. For asingleunit, the adjustable range is1~254, and for parallel units ,it is 1~6.
Screen always on	Selectable whether the screen is always on or not
Beep	You can choice whether enable the Beep alarm
Screen brightening time	Setting range 0-60 seconds
Backlight brightness	0-100%

5.2.1.2 Time Setup

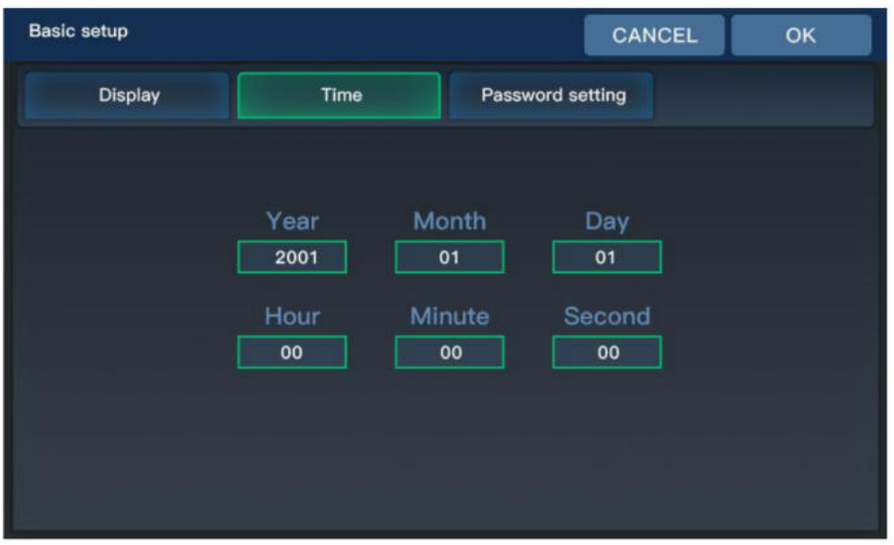

5.2.1.3 Password Setting（Password is required to access the Grid Settings and Advanced Settings）

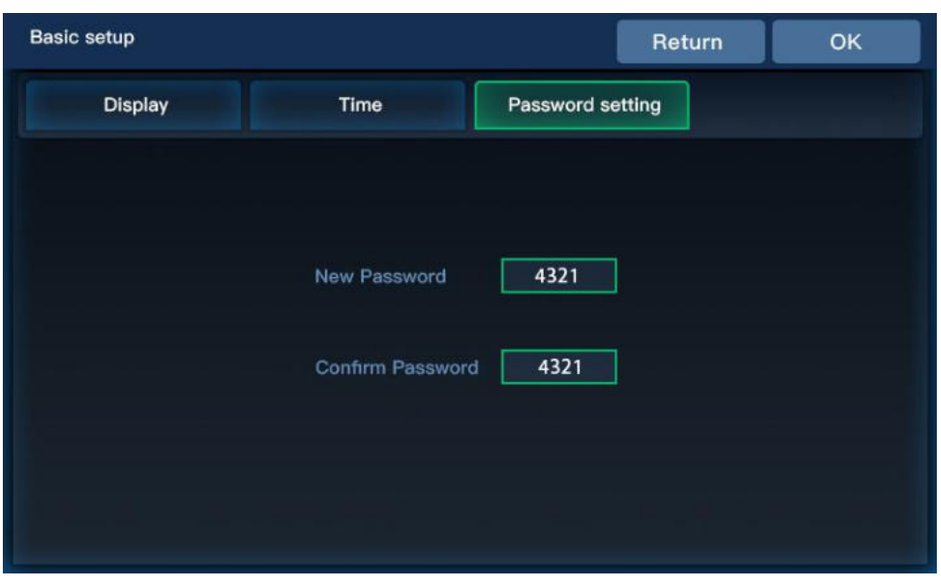

Default password is "4321".
Password setting value range: 0~9999

Saturn 4-6K LVS series

5.2.1.4 On grid setup

To enter this setting, you need to enter the password set by the user, the default password is "4321".

(1) Basic



Parameter Meaning	Description
Grid Standard	Italy:CEI 021
	Germany:VDE-ARN-4105
	Europel:EN50549-1
	Spain:UNE217002
	Great Britain:G99
	South Africa: NRS-097
	Other regions:GNL
	Australia:AS4777.2 Australia A
	Australia:AS4777.2 Australia Newzealand
	Poland:EN 50549-1
	Northern Ireland:G98/NI
	Great Britain:G98
	Northern Ireland:G99/NI
	Ireland: EN50549-IE
	MYANMAR
	Thailand: PEA-MEA

Saturn 4-6K LVS series

Parameter Meaning	Description
Grid Frequency	Selection of local grid frequency,50Hz/60Hz
Sell Power Max	Setting the maximum grid-connected power
External CT ratio	When connecting an external CT,enter the ratio on the CT specification.
Buy power Max	Maximum power drawn from the grid. If the grid charging power + load power exceeds this setting, the machine reduces the charging power. (Setting range: 0 to rated power)
Zero-export power	Error calibration power in the case of backflow prevention, recommended setting 20-100W
On-Grid Reactive Power	Setting range of reactive power percentage: 0% to 100%
Reactive power over/under excited	Over indicates 0%-100% / Under indicates -100%-0%
On Grid PF	Setting range 0.8-1
Power factor over/under excited	Over indicates 0.8-1 / Under indicates -0.8 ~- 1

Saturn 4-6K LVS series

(2) Enter Service (This setting is not recommended to be changed by the customer, the value depend on the grid standard)



Parameter Meaning	Description
Connect Voltage Low	Grid-connected low voltage protection voltage
Connect Voltage High	Grid-connected high-voltage protection voltage
Normal connect delay time	Grid normal connection,grid connection delay time
Reconnect delay time	Grid down reconnection, grid connection delay time
Connect Frequency Low	Grid-connected low-frequency protection points
Connect Frequency High	Grid-connected high-frequency protection points
Normal connect Power Ramp Rate	Normal grid connection,rate of rise of grid-connected power
Reconnect Power Ramp Rate	Grid disconnection and reconnection,rate of rise of grid-connected power

(3) Grid Protection (This setting is not recommended to be changed by the customer, the value depend on the grid standard)



Parameter Meaning	Description
LV1	Class 1 undervoltage protection point
LF1	Class 1 underfrequency protection point
LV2	Class 2 undervoltage protection point
LF2	Class 2 underfrequency protection point
HV1	Class 1 overvoltage protection point
HF1	Class 1 overfrequency protection point
HV2	Class 2 overvoltage protection point
HF2	Class 2 overfrequency protection point
Time	Protection Response Time

5.2.2 Work Mode Setup

5.2.2.1.Work Mode

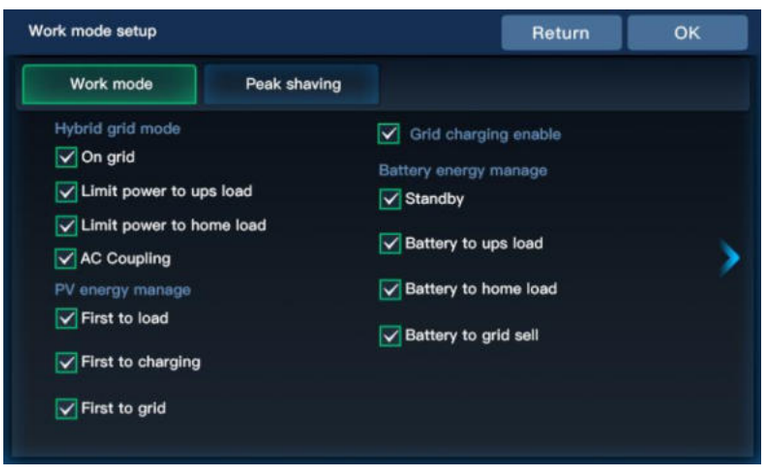

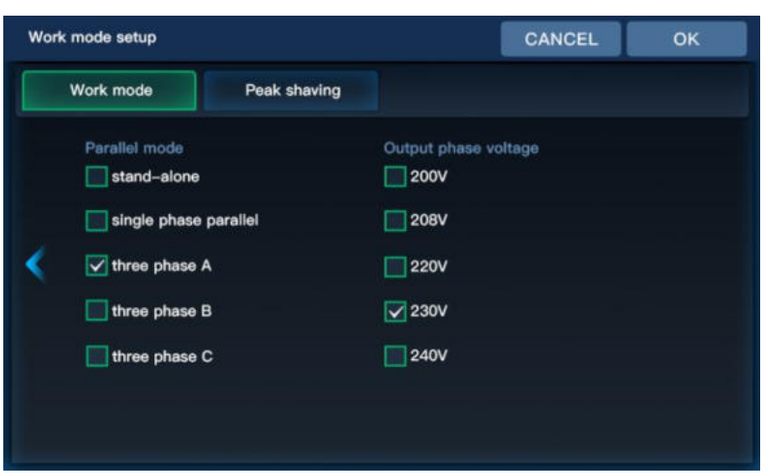

Home Load:connected to the GRID port of the machine,requires external CT for monitoring.
UPS Load:connected to the LOAD port of the machine.

Parameter Meaning	Option	Description
Hybrid grid mode	On grid	Grid-connected mode. PV or battery energy can be fed into the grid.
	Limit Power to UPS load	CT-free anti-backflow mode. The inverter outputs zero power to the Grid port, and PV or battery energy is only supplied to the UPS load.
	Limit Power to home load	CT-based anti-backflow mode. The inverter outputs zero power to the household grid inlet, and PV or battery powers the UPS, home load and smart loads.
	AC Coupling	Connect the grid-connected inverter to the grid side or generator port of the hybrid inverter.

PV energy manage	When mixed grid mode is set to "Limit Power to ups load" or when CT is not connected, the following load refers to the ups load. When mixed grid mode is set to "Limit Power to home load/On grid" and CT is connected, the following load refers to the ups load plus the home load	
	First to Load	PV power supply logic: load-charge-grid connection
	First to charging	PV power supply logic: charge-load-grid connection
	First to grid	PV power supply logic: load-grid connection-charge
Grid charging enable	Selectable grid participation in battery charging	
Battery energy manage	Standby	The battery does not discharge, and the battery is discharged only when the working state is off the grid.
	Battery to UPS load	When the PV power is less than the UPS load power, the battery discharge is added.
	Battery to home load	The battery can supply the power to UPS load, Smart load and Home load.
	Battery to grid sell	The battery can supply the power to grid.
Parallel mode	Stand-alone	
	Single phase Parallel	
	Three Phase A	Three-phase parallel connection setting All machines in phase 1 must be set as [three phase A] All machines in phase 2 must be set as [three phase B] All machines in phase 3 must be set as [three phase C] When the output voltage is 230Vac At present the line voltage between the live wire L1 in phase 1 and the live wire L2 in phase 2 is 230*1.732 = 398Vac, and similarly the line voltage
	Three Phase B	
	Three Phase C	
Output phase voltage	Settable: 200V,208V,220V,230V,240V	

Saturn 4-6K LVS series

Set the Work Mode:

1. Feed Grid First

Combination:

- Hybrid Grid Mode: On grid
- PV Energy Management: First to grid
- Battery Energy Management: Standby (configurable as needed)

Explanation:

- When PV energy is sufficient: PV power supplies the load first, surplus energy is fed into the grid, and the battery is charged only last.
- When PV energy is insufficient: PV power and grid power jointly supply the load, and the battery does not participate in loading.
- When PV is not operating: The grid supplies the load; the battery will discharge only when the mains power is unavailable.

2. Self-use

Combination:

- Hybrid Grid Mode: On grid
- PV Energy Management: First to load
- Battery Energy Management: Battery to home load

Explanation:

- When PV energy is sufficient: PV power supplies the load first, and surplus energy is used to charge the battery or fed into the grid.
- When PV energy is insufficient: PV power, battery and grid jointly supply the load.
- When PV is not operating: Battery and grid jointly supply the load, with priority given to the battery.

3. Backup

Combination:

- Hybrid Grid Mode: Limit Power to home load
- PV Energy Management: First to charging
- Battery Energy Management: Standby (Battery energy management: set according to requirements.).

Explanation:

- When PV energy is sufficient: PV power prioritizes charging the battery, with surplus energy supplied to the load; PV can work with mains power to supply the load simultaneously.
- When PV energy is insufficient: PV only charges the battery, and the grid supplies the load.
- When PV is not operating: The grid supplies the load; the battery will discharge only when the mains power is unavailable.

5.2.2.2. Peak Shaving



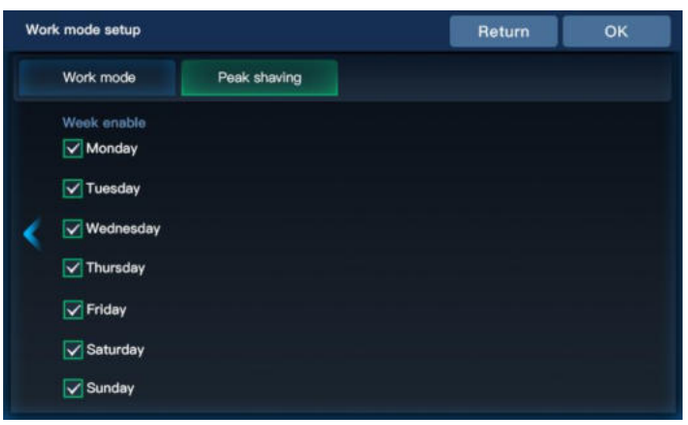

Parameter Meaning	Description
Time charging/ discharging enable	Select whether to turn on timed charging and discharging
Start/End Time	Setting the time period for timed charging and discharging
Stop SOC	Setting the battery charging cut-off SOC value and the cut-off SOC value for discharging during the timed charging and discharging time period (during BMS communication)
Stop Volt	Setting the battery charging cut-off voltage value and discharging cut-off voltage value during the timed charging and discharging time period (when the BMS is not communicating)
Max Power	Setting the battery charging power and discharging power during the timed charging and discharging time period.
Grid	When setting the timed charge, select the grid to charge the battery.
Gen	When setting the timed charge, select the generator to charge the battery.
Week enable	Sets the day of the week for time dcharging/discharging(effective only for time-sharing charging/discharging).
Max.consumption enable	When this option is enabled, the battery operates according to the battery energy management settings during non-scheduled charge and discharge periods.

NOTICE

Compared with other modes, 'peak shaving' mode has the highest priority.

Explanation:
(1) Off-peak period: During the off-peak period when electricity prices are lower, the grid and photovoltaic (PV) power supply the alternating current (AC) load first, and the remaining energy is used to charge the battery.
(2) Peak period: During the peak period when electricity prices are higher, the inverter prioritizes the use of PV and battery energy to power the load, reducing power drawn from the grid to lower electricity costs. (Power selling is also allowed.)

5.2.3 Battery setup

To enter this setting, you need to enter the password set by the user, the default pass word is“4321”.

5.2.3.1. Battery Type



Parameter Meaning	Option	Description
Battery chg. curr. limit mode	HMI setting	Maximum battery charging current is limited according to the inverter battery charging current setting value.
	BMS protocol	Maximum battery charging current is limited by the current limit value of the BMS.
	Inverter logic	Maximum battery charging current is limited by the machine's derating logic.
BMS comm. interface	Disable	BMS does not communicate
	RS485	BMS RS485 communication function
	CAN	BMS CAN communication function
Batt ChgTemp Compensation enable	Select whether to turn on temperature compensation	
Battery Type	USER define	User customizable to set all battery parameters
	SLd	Sealed Lead Acid Battery
	FLd	Open-ended lead-acid batteries
	GEL	gel lead-acid battery
	LFP/14/ 15/ LFP 16	Li-$FePO_4$/14/15/16, corresponding to Li-$FePO_4$ 14 string, 15 string, 16 string
	N13/ N14	Ternary lithium batteries, N13/N14, corresponding to ternary lithium batteries 13 string, 14 string
	No battery	Without battery
BMS comm. protocol	When the BMS port selection setting item = 485 or CAN, you need to select the corresponding lithium battery manufacturer brand for communication: **485 protocol:**1 : PACE-PACEEX 2 : RUDA-Ritar 3 : AOGUAN=ALLGRAND BATTERY 4 :OULITE-OLITER 5 : CEF-CHANGFENG TECNOLOGY 6 : XINWANGDA -SUNWODA 7: DAQIN -DAKING 8 : WOW-SRNE 9: PYL-PYLONTECH 10 : MIT-FOXESS 11: XIX-XYE 12:POL-POWERMR 13: GUOX-Gotion 14: SMK-SMK 15: VOL-WEILAN **CAN protocol:** 16:UZE-YUZE	

Saturn 4-6K LVS series

5.2.3.2. Battery Manage

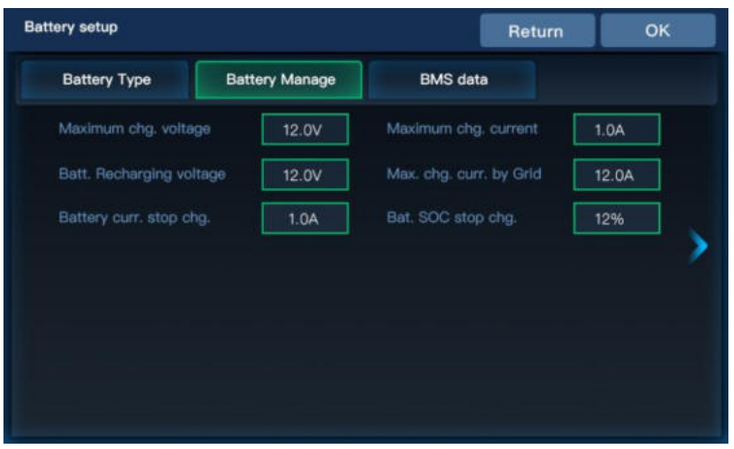



Parameter Meaning	Description
Maximum chg.voltage	When the battery is charging, the voltage reaches the value to stop charging
Batt. Recharging voltage	When the battery is fully charged, the inverter stops charging and resumes charging when the battery voltage falls below this voltage value.
Battery curr. stop chg.	when the charging current falls below this setting, the battery will stop charge.
Maximum chg. current	Set the current magnitude for battery charging. When BMS communication is normal, this charging current parameter will be associated with the charging current limit value uploaded by the BMS. In this case, the set value must not exceed the current limit value; otherwise, the setting will fail.
Max. chg. curr. by Grid	When using mains charging, set the size of the battery mains charging current (the value is the battery current)
Bat.SOC stop chg.	"Charging will stop when the SOC value reaches this set point (effective when BMS communication is normal)."
Batt volt.stop dischg	The battery will stop discharging when it reaches this setting value in the mixed grid state (when there is grid access).
Batt volt.restart dischg	When the battery voltage is too low to discharge, the battery voltage needs to reach this setting to discharge again.

Parameter Meaning	Description
Battery under volt. alarm	Battery under-voltage alarm point, when the battery voltage is lower than the judgment point, the under-voltage alarm will be reported and the output will not be turned off.
Batt volt low recovery	When the battery report voltage low fault, the battery voltage reach this setting, the fault will be cleard.
Batt voltage low fault	When in the off-grid state, the inverter will shut down due to the low voltage of the battery; when in the hybrid grid state,the battery will stop outputting due to low voltage.
Battery max.curr.dischg.	Set the current magnitude for battery discharge. When BMS communication is normal, this discharge current parameter will be associated with the discharge current limit value uploaded by the BMS. In this case, the set value must not exceed the current limit value; otherwise, the setting will fail.
Batt.SOC.stop.dischg	In the hybridgrid state, the battery will stop discharging when the State of Charge(SOC)is lower than this set value.In the off-grid state,the battery will continue to discharge when the SOC is lower than this set value.
Batt.SOC restart dischg	When the battery report SOC low fault, the battery SOC reach this setting, it can restart discharge(valid when BMS communication is normal).
Batt under capacity alarm	SOC value up to this setting will alarm. The inverter output will not shut down and the fault disappears if the SOC value exceeds 5% of the set value. (Valid when BMS communication is normal)
Batt.SOC low fault	When the State of Charge (SOC)of the battery reaches this set value,the inverter will report alow battery SOC fault and stop discharging(this is valid when the Battery Management System(BMS)communication is normal).
Batt. Volt. low fault delay	When the battery voltage reaches the "Batt voltage low fault" setting, the battery will stop diacharging with a delay.

5.2.3.3. .BMS date(When the battery communicate with inverter)

Check the data that battery BMS uploade to inverter.



5.2.4 Advance Setup

To enter this setting, you need to enter the password set by the user, the default password is "4321".

5.2.4.1. Generator



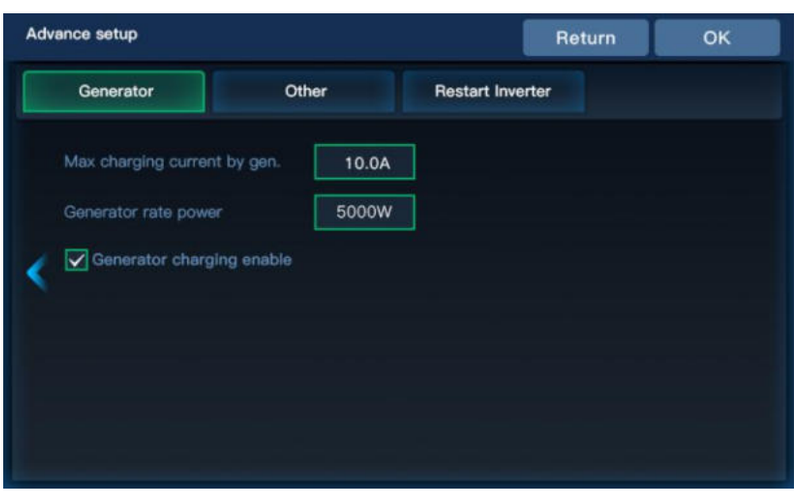

Parameter Meaning	Description	
Generator work mode	Generator Input	When the generator is connected to the “Gen port”, select the generator input.
	Smart load	When a load is connected to the “Genport” , select the load output.
	Gridal ways to smart load enable	Whether to en able continuous power supply tothe smart load.
	Off-grid disconnect smart load	Whether or not to enable the Off-grid Disconnect Smart Load function.
Turn off/on the smart load SOC	Set the State of Charge (SOC) of the battery to turn the intelligent load on or off.	
Turnoff/on the smart load voltage	Set the battery voltage to turn the intelligent load on or off.	
Max charging current by gen.	Maximum battery charging current during generator charging.	
Generator rate power	Setting the power of the generator up to the rated power of the inverter.	
Generator charging enable	Setting whether the generator is charged or not.	

5.2.4.2. Other

To enter this setting, you need to enter the password set by the user,the default pass word is “4321”.

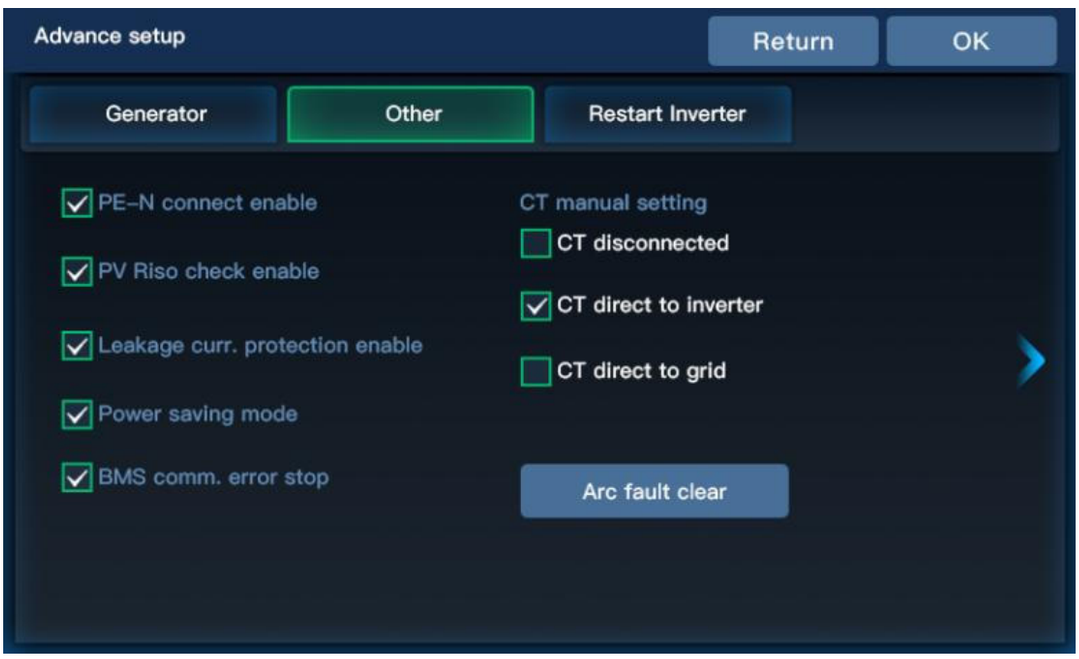



Parameter Meaning	Description
PE-N connect enable	Enable automatic switching of Neutral connections
PV Riso check enable	Enable PV insulation impedance detection
Leakage curr. protection enable	Enable leakage current protection
Power saveing mode	After turning on the energy-saving mode, if the load is empty or less than 25W, the inverter output will be shut down after a delay of 5min; when the load is more than 40W, the inverter will start automatically.
BMS comm. error stop	Inverter stops output when BMS communication error occurs.
CT manual setting	Select the direction of the CT according to the installation of the CT.
Electric meter options	Whether to enable single - phase meter.
Smart meter connection point	Select on - grid inverter side or grid side according to meter installation location.

5.2.4.3. Restart

To enter this setting, you need to enter the password set by the user, the default password is“4321”.

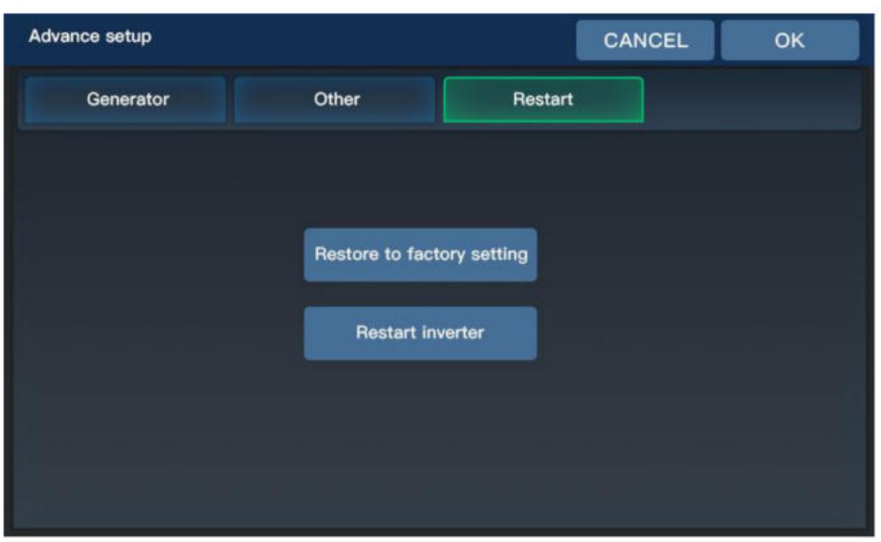

Parameter Meaning	Description
Restore to factory setting	Resetall invertersettings
Restart inverter	Restart the inverter

Saturn 4-6K LVS series

5.3 Time-slot charging/discharging function

The Saturn series is equipped with a time-slot charging and discharging function, which allows users to set different charging and discharging periods according to the local peak and valley tariffs, so that the utility power and PV energy can be used rationally.

When mains electricity is expensive, the battery inverter is used to carry the load; when the mains electricity is cheap, the mains electricity is used to carry the load and charge, which can help customers to save electricity costs to the greatest extent.

Below are examples for users to understand the function.

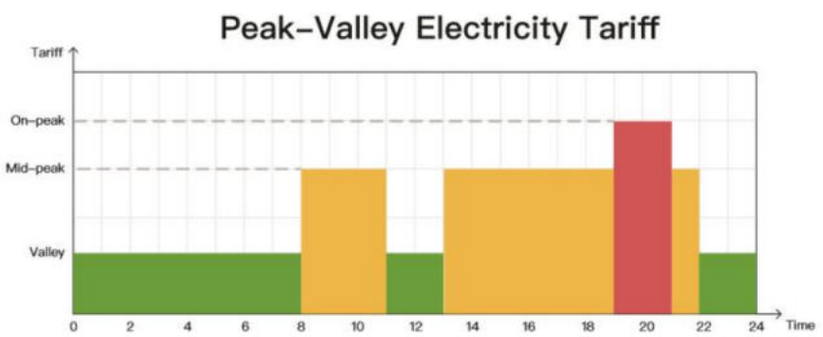

Time-slot Utility Charging/Carrying Function



Time-slot Battery Disacharging Function



Time-slot Utility Charging/ Supplying Power Function	Time-slot Battery Disacharging Function
	
With 3 definable periods, the user can freely set the mains charging/supplying power time within the range of 00:00 to 23:59. During the time period set by the user, if PV energy is available, PV energy will be used first, and if PV energy is not available or insufficient, utility energy will be used as a supplement.	With 3 definable time periods, users can freely set the battery discharge time within the range of 00:00 to 23:59. During the time set by the user, the inverter will give priority to the battery inverter to carry the load, and if the battery power is insufficient,the inverter will automatically switch to mains power to ensure stable operation of the load.

5.4 Battery parameter

Lead-acid battery

Parameters \ Battery type	Sealed lead acid battery (SLD)	Gel lead acid battery (GEL)	Flooded lead acid battery (FLD)	User-defined (USE)	Adjustable
Overvoltage disconnection voltage	60V	60V	60V	60V	
Battery fully charged recovery point	52V	52V	52V	52V	√
Boost charge voltage	57.6V	56.8V	57.6V	40-60V	√
Undervoltage alarm voltage([01] fault)	44V	44V	44V	40-60V	√
Undervoltage alarm voltage recovery point([01] fault)	Undervoltage alarm voltage+0.8V				
Low voltage disconnection voltage([04] fault)	42V	42V	42V	40-60V	√
Low voltage disconnection voltage recovery point ([04] fault)(setup item [35])	52V	52V	52V	52V	√
Discharge limit voltage	-	-	-	40-60V	√
Over-discharge delay time	5s	5s	5s	1-30s	√
Boost charge duration	-	-	-	10-600 minutes	√

Saturn 4-6K LVS series

Li-ion batter

Battery type / Parameters	Ternary (N13)	Ternary (N14)	LFP (L16)	LFP (L15)	LFP (L14)	Adjustable
Overvoltage disconnection voltage	60V	60V	60V	60V	60V	
Battery fully charged recovery point	50.4V	54.8V	53.6V	50.4V	47.6V	√
Equalizing charge voltage	-	-	-	-	-	√
Boost charge voltage	53.2V	57.6V	56.8V	53.2V	49.2V	√
Undervoltage alarm voltage([01] fault)	43.6V	46.8V	49.6V	46.4V	43.2V	√
Undervoltage alarm voltage recovery point([01] fault)	Undervoltage alarm voltage+0.8V					
Low voltage disconnection voltage([04] fault)	38.8V	42V	48.8V	45.6V	42V	√
Low voltage disconnection voltage recovery point ([04] fault)(setup item [35])	46V	49.6V	52.8V	49.6V	46V	√
Discharge limit voltage	36.4V	39.2V	46.4V	43.6V	40.8V	√
Over-discharge delay time	30s	30s	30s	30s	30s	√
Boost charge duration	120 minutes	120 minutes	120 minutes	120 minutes	120 minutes	√

5.5 Connection Mode

(1) **Basic**

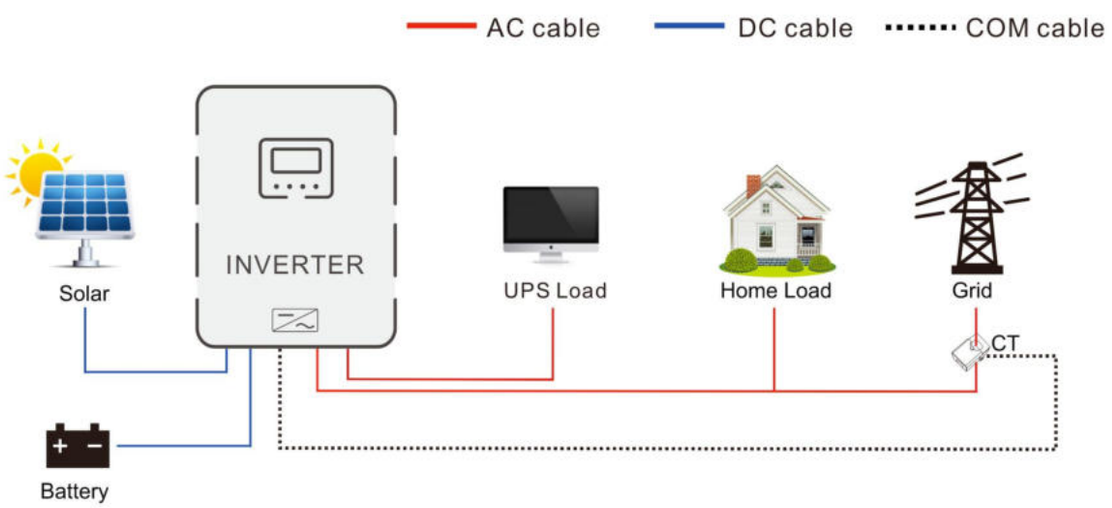

(2) **With generator**

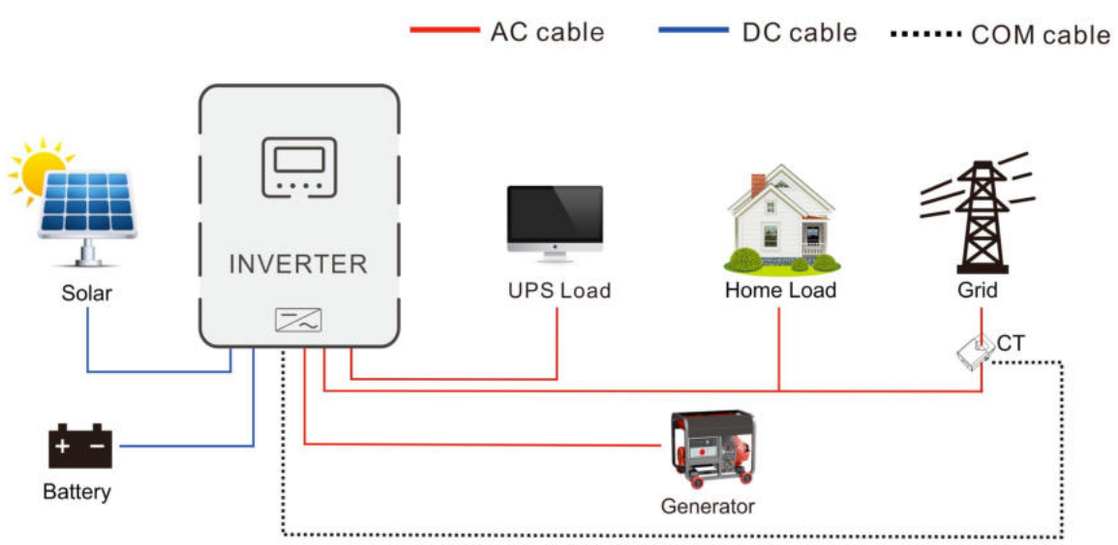

(3) **With smart load**

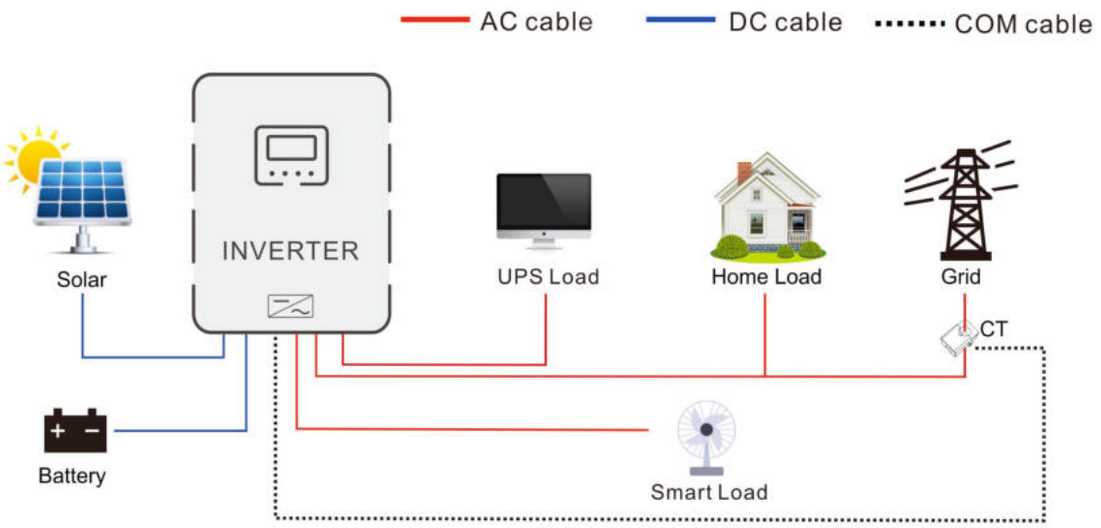

(4) **AC coupling**

Note: Smart Load Mode and ACC oupling Mode cannot be used at the same time.

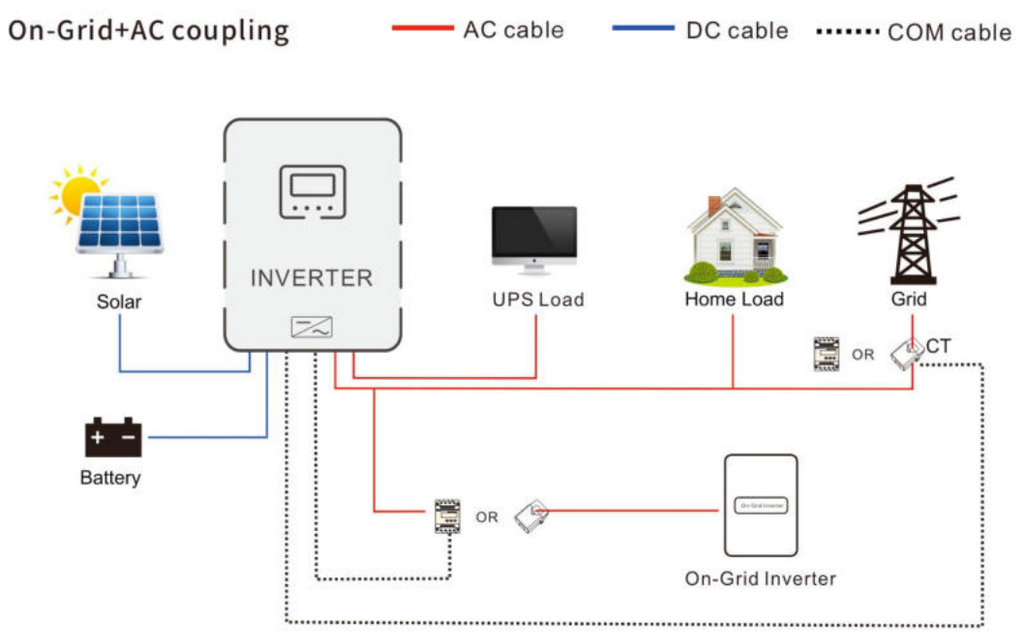

06 Communication

6.1 Dry contact

1. RSD power supply
2. Temperature sampling (reserved)
3. Generator remote start/stop
4. CT connection.

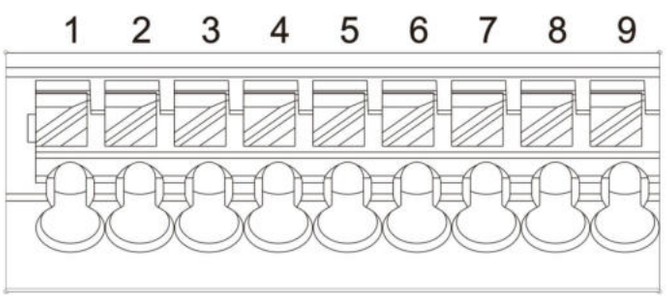

Function	Description
RSD power supply	PIN 1 is GND,PIN 3 is RSD 12V+
Temperature sampling (reserved)	Pin 1 & Pin 2 can be used for battery temperature sampling compensation.
Generator remote start/stop	4-5: NC 4-6:NO Remote generator shutdown: Pins 4 to 5are normally closed, and pins 4 to 6 are normally open. (Pin 4/5/6 output 125Vac/1A,230Vac/1A,30Vdc/1A)
CT connection	PIN 8: CT-, PIN9:CT+

NOTICE

If you need to use the remote start /stop function of a dry contact generator ,please ensure that the generatoris equipped with an automatic transmitter and supports remote start /stop functions.

6.2 RS485/CAN communication port

1.RS485/CAN communication port for RS485 and CAN communication with lithium battery BMS;

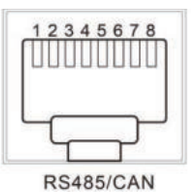

RS485/CAN

RJ45	Description
Pin 1	RS485-B
Pin 2	RS485-A
Pin 3	GND
Pin 4	CANH
Pin 5	CANL
Pin 6	GND
Pin 7	RS485-A
Pin 8	RS485-B

6.3 DIP switch

The single inverter need to press down DIP 1,2. When the inverters are in parallel, press down DIP 1,2 of the first and last inverters.



6.4 WIFI port

The WIFI port is used to connect to the Wi-Fi/GPRS data acquisition module, which allows the user to view the operating status and parameters of the inverter via the mobile.

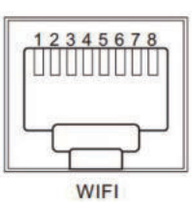

WIFI

RJ45	Description
Pin 1	5V
Pin 2	GND
Pin 3	/
Pin 4	/
Pin 5	/
Pin 6	/
Pin 7	RS485-A
Pin 8	RS485-B

6.5 USB-A port

It is used to updated the screen firmware

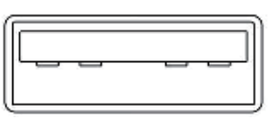

6.6 USB-B port

This port is a USB communication port, which can be used for USB communication with the selected upper computer software of our company (Need to apply for). To use this port, the corresponding “USB to serial port chip CH340T driver” should be installed in the computer.

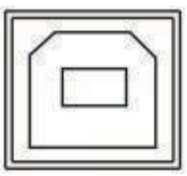

6.7 Parallel port

a) This port is used for parallel communication, through which the parallel modules can communicate with each other.
b) Each machine has two 8Pin ports, one for the parallel_A and one for the parallel_B.
c) When connecting, make sure to connect the local Parallel_A to the parallelized machine Parallel_B, or the local Parallel_B should be connected to the parallelized machine Parallel_A.
d) Do not connect local parallel_A to local parallel_B.

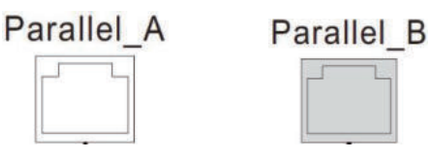

6.8 DRMS port(only Australia)

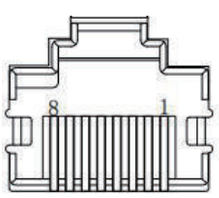

DRMS

MODE	RJ45 socket asserted by shorting pins		Requirement
DRM0	5	6	Operate the disconnection device
DRM5	1	5	Do not generate power to grid
DRM6	2	5	Do not generate at more than 50% of rated power
DRM7	3	5	Do not generate at more than 75% of rated power AND Sink reactive power if capable
DRM8	4	5	Increase power generation (subject to constraints from other active DRMS)

RJ45	Description
Pin 1	DRM5
Pin 2	DRM6
Pin 3	DRM7
Pin 4	DRM8
Pin 5	RefGen
Pin 6	COM/DRM0
Pin 7	V+
Pin 8	V-

Saturn 4-6K LVS series

6.9 External CT port

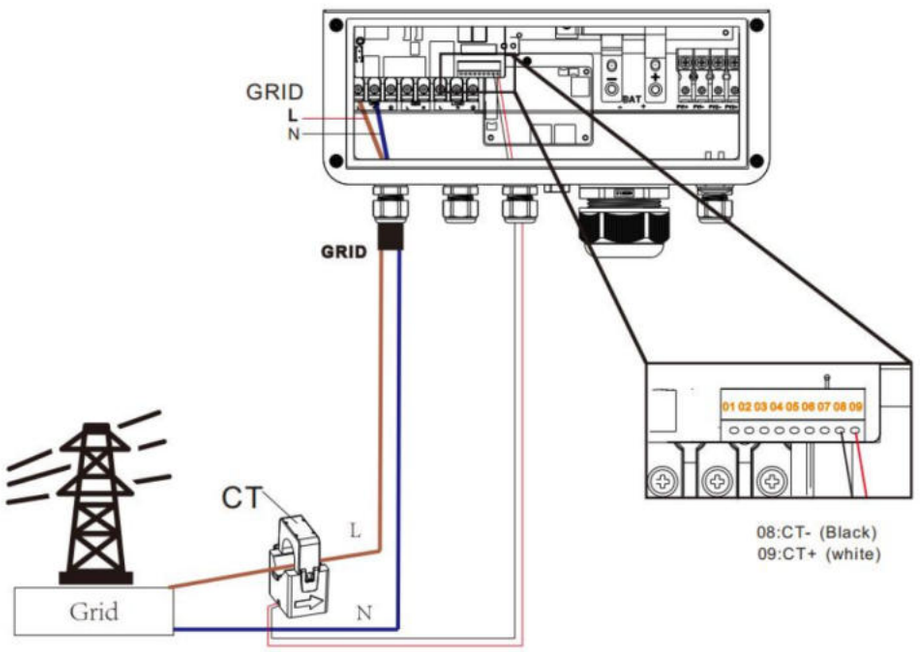

1. Split Core Current Transformer (CT) dimension: (mm)
2. Secondary output cable length is 4m.
3.The CT direction is “to inverter”

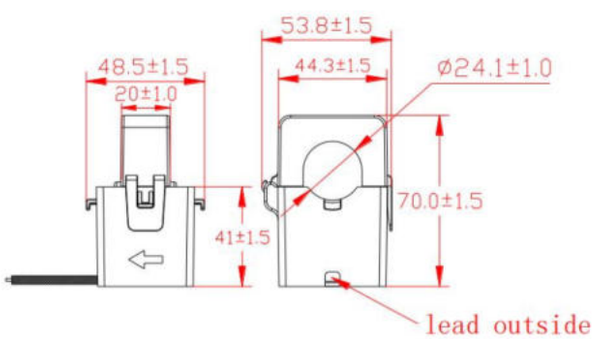



07 Fault and Remedy

7.1 Fault code

Fault code	Fault name	Whether it affects the output or not	Description
【01】	BatVoltLow	No	Battery undervoltage alarm
【02】	BatOverCurrSw	Yes	Battery discharge average current overcurrent (software protection)
【03】	BatOpen	Yes	Battery not-connected alarm
【04】	BatLowEod	Yes	Battery undervoltage stop discharge alarm.
【05】	BatOverCurrHw	Yes	Battery overcurrent (hardware protection).
【06】	BatOverVolt	Yes	Charging overvoltage protection.
【07】	BusOverVoltHw	Yes	Bus overvoltage (hardware protection).
【08】	BusOverVoltSw	Yes	Bus overvoltage (software protection).
【09】	PvVoltHigh	No	PV overvoltage protection.
【10】	PvOCSw	No	Boost overcurrent (software protection).
【11】	PvOCHw	No	Boost overcurrent (hardware protection).
【13】	OverloadBypass	Yes	Bypass overload protection.
【14】	OverloadInverter	Yes	Inverter overload protection.
【15】	AcOverCurrHw	Yes	Inverter overcurrent (hardware protection).
【17】	InvShort	Yes	Inverter short-circuit protection.
【19】	OverTemperMppt	No	Buck heat sink over temperature protection.

Saturn 4-6K LVS series

【20】	OverTemperInv	Yes	Inverter AC output with load or AC charging radiator over-temperature protection.
【21】	FanFail	Yes	Fan blockage or failure fault.
【22】	EEPROM	Yes	Memory failure.
【23】	ModelNumErr	Yes	Model setting error.
【26】	RlyShort	Yes	Inverted AC Output Backfills to Bypass AC Input.
【29】	BusVoltLow	Yes	Internal battery boost circuit failure.
【30】	BatCapacityLow1	No	Alarm given when battery capacity rate is lower than 10% (setting BMS to enable validity).
【31】	BatCapacityLow2	No	Alarm given when battery capacity rate is lower than 5% (setting BMS to enable validity).
【32】	BatCapacityLowStop	Yes	Inverter stops when battery capacity is low (setting BMS to enable validity).
【34】	CanCommFault	Yes	CAN communication fault in parallel operation.
【35】	ParaAddrErr	Yes	Parallel ID (communication address) setting error.
【37】	ParaShareCurrErr	Yes	Parallel current sharing fault .
【38】	ParaBattVoltDiff	Yes	Large battery voltage difference in parallel mode.
【39】	ParaAcSrcDiff	Yes	Inconsistent AC input source in parallel mode.
【40】	ParaHwSynErr	Yes	Hardware synchronization signal error in parallel mode.
【41】	InvDcVoltErr	Yes	Inverter DC voltage error.
【42】	SysFwVersionDiff	Yes	Inconsistent system firmware version in parallel mode.
【43】	ParaLineContErr	Yes	Parallel line connection error in parallel mode.
【44】	Serial number error	Yes	No serial number set at factory.
【45】	Error setting of split- phase mode	Yes	Item “Parallel” setting error.
【46】	Meter communication error	Yes	Abnormal wiring, check whether the meter communication line is connected correctly, and check whether the meter communication address is set correctly.

【49】	Grid over voltage	Yes	selects the local corresponding grid standard.
【50】	Grid under voltage	Yes	
【51】	Grid over frequency	Yes	
【52】	Grid under frequency	Yes	
【53】	Grid loss	Yes	
【54】	Grid DC current over	Yes	
【55】	Grid standard un init	Yes	
【56】	Low insulation resistance fault	No	PV1+, PV2+ and PV- abnormally low impedance to ground.
【57】	Leakage current overload fault	Yes	System leakage current exceeds limit.
【58】	BMS communication error	No	Check whether the communication line is connected correctly and whether BMS is set to the corresponding lithium battery communication protocol.
【60】	BMS battery low temperature alarm	No	BMS alarm battery low temperature
【61】	BMS battery over temperature alarm	No	BMS alarm battery over temperature.
【62】	BMS battery over current alarm	No	BMS alarm battery over current.
【63】	BMS battery undervoltage alarm	No	BMS alarm low battery.

7.2 Troubleshooting

Fault code	Faults	Remedy
Display	No display on the screen	Check if the battery switch or PV switch is closed; whether the switch is in the "ON" state;press any button on the screen to exit the screen sleep mode.
【06】	Battery overvoltage protection	Check that the battery voltage does not exceed the protection value. If it does, discharge the battery until the voltage falls below the battery over-voltage recovery point.
【01】 【04】	Battery undervoltage protection	Charge the battery until it returns to the low voltage disconnection recovery voltage.
【21】	Fan failure	Check if the fan is not turning or blocked by foreign object.
【19】 【20】	Heat sink over temperature protection	When the temperature of the device is cooled below the recovery temperature, normal charge and discharge control is resumed.
【13】 【14】	Bypass overload protection, inverter overload protection	1) Reduce the use of power equipment; 2)Restart the unit to resume load output.
【17】	Inverter short-circuit protection	1) Check the load connection carefully and clear the short-circuit fault points; 2) Re-power up to resume load output.
【09】	PV overvoltage	Use a multimeter to check if the PV input voltage exceeds the maximum allowable input voltage rated.
【03】	Battery disconnected alarm	Check if the battery is not connected or if the battery circuit breaker is not closed.
【40】 【43】	Parallel connection fault	Check if the parallel line is not connected well, such as loose or wrong connection.
【35】	Parallel ID setting error	Check whether the setting of parallel ID number is repeated.
【37】	Parallel current sharing fault	Check if the parallel current sharing line is not connected well, such as loose or wrong connection.
【39】	Inconsistent AC input source in parallel mode	Check whether the parallel AC inputs are from the same input interface.
【42】	Inconsistent system firmware version in parallel mode	Check whether the software version of each inverter is consistent.
【44】	Serial number error	Incorrect device serial number setting.
【45】	Parallel mode error	There is a device in the parallel system with the wrong parallel mode setting.

【49】	High grid voltage	Check that the grid voltage is within the normal range, if the grid voltage is abnormal, wait until the grid voltage is restored.
【50】	Low grid voltage	Check that the grid voltage is within the normal range, if the grid voltage is abnormal, wait until the grid voltage is restored.
【51】	High grid frequency	Check that the grid frequency is within the normal range, if the grid frequency is abnormal, wait until the grid frequency is restored.
【52】	Low grid frequency	Check that the grid frequency is within the normal range, if the grid frequency is abnormal, wait until the grid frequency is restored.
【53】	Grid unconnected	Check if the grid is correctly connected, e.g. if the switch is closed and if the grid is disconnected.
【54】	Grid-connected current with DC component over	Power down and restart the device, if it continues to report faults, contact the manufacturer after sales.
【56】	Low insulation resistance fault	Check that the system is well grounded and that the PV modules and cables are not worn.
【57】	Leakage current overload fault	Check that the system is well grounded and that the loads are not operating abnormally.

NOTICE

Incase of product failures that cannot be resolve dusing the method sin the above table,please contact our after-sales service department for technical support. Donot disassemble the equipment with out authorization.

08 Protection and Maintenance

8.1 Protection features

No	Protection Feature	Instruction
1	PV input current/power limiting protection	When the charging current or power of the PV array configured exceeds the PV input rated value, the inverter will limit the input power and charge at the rated.
2	PV input over-voltage	If the PV voltage exceeds the maximum value allowed by the hardware, the machine will report a fault and stop the PV boost to output a sinusoidal AC wave.
3	PV night reverse current protection	At night, the battery is prevented from discharging through the PV module because the battery voltage is greater than the voltage of PV module.
4	AC input over-voltage protection	When the AC input voltage of each phase exceeds 280V, the mains charging will be stopped and switched to the inverter mode.
5	AC input under-voltage protection	When the AC input voltage of each phase below 170V, the utility charging will be stopped and switched to the inverter mode.
6	Battery over-voltage protection	When the battery voltage reaches the over-voltage cut-off point, the PV and the utility will automatically stop charging to prevent the battery from being overcharged and damaged.
7	Battery under-voltage protection	When the battery voltage reaches the under-voltage cut-off point, the inverter will automatically stop the battery discharge to prevent damage from over-discharging the battery.
8	Battery over-current protection	After a period when the battery current exceeds that allowed by the hardware, the machine will switch off the output and stop discharging the battery.
9	AC output short-circuit protection	When a short-circuit fault occurs at the load output terminal, the AC output is immediately turned off and turned on after 1 second.If the output load terminal is still short-circuited after 3 attempts, the inverter must be manually restarted after first removing the short- circuit fault from the load before the normal output can be restored.
10	Heat sink overtemperature protection	When the internal temperature of the inverter is too high, the inverter will stop charging and discharging; when the temperature returns to normal, the inverter will resume charging and discharging.

11	Inverter over-load protection	After triggering the overload protection the inverter will resume output after 3 minutes, 5 consecutive overloads will switch off the output until the inverter is restarted. (102%<load<125%) : alarm and output shutdown after 5min; (125% < load < 150%) : alarm and output shutdown after 10s. Load > 150% : alarm reported and output switched off after 5s.
12	AC output reverse	Prevents AC back flow from the battery inverter to the bypass AC input.
13	Bypass over-current protection	Built-in AC input over-current protection circuit breaker.
14	Bypass phase inconsistency protection	When the phase of the bypass input and the phase of the inverter split do not match, the inverter disables switching to the bypass output to prevent the load from dropping out or short-circuiting when switching to the bypass.
15	Charging short-circuit protection	When the external battery port is short-circuited in the PV or AC charging state, the inverter will protect and stop the output current.
16	Parallel connection error protection	In parallel operation, the equipment will be protected when the parallel line is lost.
17	Parallel battery voltage difference protection	In parallel operation, the equipment will be protected when the battery connection is inconsistent and the battery voltage is greatly different from that detected by the host
18	Parallel AC voltage difference protection	In parallel operation, the equipment will be protected when the AC IN input connection is inconsistent.
19	Synchronization signal fault protection	The equipment will be protected when there is a fault in the guidance signal between parallel buses, causing inconsistent behavior of each inverter.

8.2 Maintenance

To maintain optimum and long-lasting working performance, we recommend that the following items are checked twice a year.

1. Ensure that the airflow around the inverter is not blocked and remove any dirt or debris from the radiator.
2. Check that all exposed conductors are not damaged by sunlight, friction with other surrounding objects, dry rot, insect or rodent damage, etc. The conductors need to be repaired or replaced if necessary.
3. Verify that the indications and displays are consistent with the operation of the equipment, note any faults or incorrect displays and take corrective action if necessary.
4. Check all terminals for signs of corrosion, insulation damage, high temperatures or burning/discolouration and tighten terminal screws.
5. Check for dirt, nesting insects and corrosion, clean as required, Clean the insect screen regularly.
6. If the lightning arrester has failed, replace the failed arrester in time to prevent lightning damage to the inverter or other equipment of the user.

⚠ DANGER

- Make sure that the inverter is disconnected from all power sources and that the capacitors are fully discharged before carrying out any checks or operations to avoid the risk of electric shock.

The Company shall not be liable for damage caused by :

1. Damage caused by improper use or use in a wrong location.
2. Photovoltaic modules with an open circuit voltage exceeding the maximum permissible voltage.
3. Damage caused by the operating temperature exceeding the restricted operating temperature range
4. Dismantling and repair of the inverter by unauthorised persons.
5. Damage caused by force majeure: damage during transport or handling of the inverter.

09 Datasheet

MODEL	Saturn 4K LVS	Saturn 4.6K LVS	Saturn 5K LVS Saturn 5.5K LVS	Saturn 6K LVS
AC Output（load）				
Rated Output Power	4000W	4600W	5500W	6000W
Max. Peak Power	8000VA	9200VA	11000VA	12000VA
Rated Output Voltage	230Vac（Single phase） (200/208/220/240Vac settable)			
Output voltage error	±5%			
Load Motor Capacity	3HP	4HP	4HP	4HP
Rated AC Frequency	50/60Hz ± 0.3Hz			
Waveform	Pure Sine Wave			
Switch Time	10ms（typical）			
Overload	After triggering the overload protection the inverter will resume output after 3 minutes, 5 consecutive overloads will switch off the output until the inverter is restarted. (102%<load<125%): alarm and output shutdown after 5min; (125% < load < 150%) : alarm and output shutdown after 10s. Load > 150% : alarm reported and output switched off after 5s.			
AC Output (on-grid)				
Rated Output Power	4000W	4600W	5500W	6000W
Max.Apparent Power	8000VA	9200VA	11000VA	12000VA
Power factor	0.8 leading to 0.8 lagging	0.8 leading to 0.8 lagging	0.8 leading to 0.8 lagging	0.8 leading to 0.8 lagging
Rated voltage	220/230Vac	220/230Vac	220/230Vac	220/230Vac
Rated AC Frequency	50/60Hz	50/60Hz	50/60Hz	50/60Hz
RatedOutput Current	17.4Aac	20Aac	24Aac	26Aac
THD	<3%	<3%	<3%	<3%
Battery				
Battery Type	Li-ion / Lead-Acid / User Defined			
Rated Battery Voltage	48Vdc (minimum start-up voltage 44V)			
Voltage Range	40-60Vdc			
Max. Generator Charging Current	60Adc			
Max. Grid Charging Current	60Adc			
Max. Hybrid Charging Current	100Adc			
PV input				
No.of MPPT Trackers	2			
Max. PV array power	3000W/3000W	3500W+3500W	4000W+4000W	4500W+4500W
Max. input current	16/16A			

Saturn 4-6K LVS series

Max.PV Isc	27A/27Adc
Max.Open Circuit Voltage	500V
MPPT Voltage Range	120-450Vdc
Grid / Generator input	
Input Voltage Range	90V~280V
Frequency Range	50/60Hz
Max.Bypass Overload Current	40Aac
Efficiency	
MPPT Tracking Efficiency	99.9%
Max Efficiency	97.5%
European Efficiency	97%
Protection	
PV Input Lightning Protection; Anti-islanding Protection; PV String Input Reverse Polarity Protection; Insulation Resistor Detection; Residual Current Monitoring Unit; Output OverCurrent Protection Output Shorted Protection	
Surge Protection	DC type II / AC type II
Over Voltage	DC type II / AC type II
Category	
Certified specifications	
On-grid standard	EN50549-1,G99,NRS-097,CEI 021,VDE-ARN-4105,,UNE217002
Safety	IEC62109-1, IEC62109-2
EMC	EN61000-6-1, EN61000-6-3, FCC 15 class B
RoHS	Yes
Basic data	
Parallel capacity	6
Operating Temperature Range	-25~60℃,>45℃ derated
Humidity range	0-100%
Warranty	5 years
Noise	<60dB
Protection Degree	IP65
Cooling Method	Heat sink + intelligent fan cooling
Self-consumption	<100W

Saturn 4-6K LVS series

Dimensions	556*345*182mm
Weight	22.1kg
Communication port	RS485 / CAN / USB / Dry contact
External Modules (Optional)	Wi-Fi

Your project.
Our support.

SALES & SERVICE

Wayton Energy Tech Co., Ltd.
tech@waytonenergy.com
www.waytonenergy.com

For model selection, quotations and service coordination, contact WAYTON.
Manufacturer technical specifications and applicable warranty terms remain unchanged.