Single Phase Hybrid Inverter



USER MANUAL

Saturn 3K LVS Pro
Saturn 3.6K LVS Pro
Saturn 4K LVS Pro
Saturn 4.6K LVS Pro
Saturn 5K LVS Pro
Saturn 6K LVS Pro
Saturn 7.5K LVS Pro
Saturn 8K LVS Pro

USER MANUAL

Model:

Saturn 3-8K LVS Pro Series

Contents

01 Safety 2

1.1 How to use this manual 2
1.2 Symbols in this document 2
1.3 Safety instructions 3

02 Production Instructions 4

2.1 Basic Features 4
2.1.1 Function 4
2.1.2 Models 4
2.1.3 Applicable grid type 4
2.1.4 Schematic diagram of Hybrid System 5
2.1.5 Operation modes 5
2.1.6 Smart Load 10
2.1.7 Storage conditions 11
2.1.8 Storage conditions 11
2.2 Appearance Introduction 11
2.2.1 Inverter front view 11
2.2.2 Inverter side view 12
2.2.3 Inverter bottom view 12
2.2.4 Inverter back view 14
2.3 Appearance Introduction 14

03 Product Installation 16

3.1 Selection of Installation Location 16
3.1.1 Recommended installation location of the inverter, as shown in Figure 3-1: 16
3.1.2 The requirements for inverter installation spacing are shown in Figure 3-2: 16
3.1.3 Installation angle 17
3.2 Mounting the Inverter 17
3.2.1 Wall bracket installation 17
3.2.2 Mounting the inverter 18

04 Electrical Connection 19

4.1 CESC Saturn Hybrid Inverter Electrical Wiring Diagram 19
4.2 External Ground Connection 23
4.3 PV String Connection 23
4.3.1 DC connector assembly procedures 24
4.4 AC Side Connection 26
4.4.1 AC side connection requirements 26
4.4.2 AC connector assembly procedures 28
4.5 Battery Connection 30
4.5.1 The following principles must be considered when making battery connection: 30
4.5.2 Lithium battery connector assembly procedures 30
4.6 Communication Connection 32
4.6.1 Assembling the communicate terminal connector 34
4.6.2 Multiple inverters parallel connection 35
4.6.3 CT connection 37
4.6.4 Meter connection (Meter is optional) 39
4.6.5 Battery BMS communication 40
4.6.6 DRED Communication 40
4.6.7 DRED Communication 42
4.7 Monitoring Device Installation 43
4.8 WiFi Module Configuration Guide 43
4.8.1 DRED Communication 43
4.8.2 CESC setup APP download method 48

05 Equipment Commission and Stop 49

5.1 Equipment Commission Requirements 49
5.1.1 Verification before power on 49
5.1.2 Start Inverter 49
5.2 Stop Inverter 49

06 General Operation 50

6.1 Display Panel 50
6.2 LCD Screen Icons 51
6.2.1 Main screen flow chart 53
6.2.2 Main screen flow chart 54
6.3 Auto-Test 56
6.4 Online Monitoring APP 57

07 Troubleshooting 58

7.1 Error Message 58
7.2 Maintenance 62
7.2.1 External Fan Maintenance 62
7.2.2 Maintenance Notes 64

08 Technical Parameters 65

All information in this manual is subject to copyright and other intellectual property rights of CESC New Energy Technology Co., Ltd. This manual should not be modified, reproduced or copied, in whole or in part. The unauthorized use without prior written permission is strictly prohibited. CESC New Energy Technology Co., Ltd. All rights reserved.

Please read this entire document carefully before installing or using the battery system. Failure to do so or to follow any of the instructions or warnings in this document can result in electrical shock, serious injury or death, can damage battery, potentially rendering it inoperable. Warranty claims are invalid, if damage is caused by human error in a manner inconsistent with the installation manual's instructions.

The information included in this manual is verified by CESC to be accurate at the time of publication. However, due to the continuous improvement of products, this manual is subject to change without prior notice.

The illustrations in this manual are intended to help explain operating system configurations and installation instructions. Any confusion, please contact CESC immediately for advice and clarification. Thank you for your choice and trust.

Saturn 3-8K LVS Pro series

01 Safety

1.1 How to use this manual

- This manual contains important information、guidelines、operation and maintenance for the following products：Saturn 3-8KW LVS series
- The manual must be followed during installation and maintenance.

1.2 Symbols in this document

Symbol	Description
DANGER	DANGER: indicates a hazardous situations which if not avoided will result in death or serious personal injury.
WARNING	WARNING: indicates a hazardous situations which if not avoided could result in death or serious injury.
CAUTION	CAUTION: Indicates a hazardous situation which,if not avoided,may result in minor or moderate injury.
ATTENTION	NOTICE: Provides tips or cues regarding product operation.
NOTE	NOTE: Highlight important information, best practices and tips, etc.
	Grounding symbol, the inverter casing needs to be properly grounded.
	The inverter cannot be disposed of with household waste.
	Please read the instructions carefully before installation.
	Do not touch any internal parts of the inverter until 5 min after being disconnected from the mains and PV input.
	CE mark, the inverter complies with the requirements of the applicable CE guidelines.
	Danger. Risk of electric shock!
	The surface is hot during operation and no touch is allowed.
	Electric shock hazard, it is strictly forbidden to use the person to disassemble the inverter casing.

	Handle with care.
	This side up.
	Keep dry.
	Stacked layers.

1.3 Safety instructions

⚠ WARNING

This chapter contains critical safety and operational instructions.Readthem thoroughly and retain this manualfor future reference.

- This chapter contains important safety instructions. Read and keep this manual for future reference.
- Be sure to comply the local requirements and regulation to install this inverter.
- Beware of high voltage. Please turn off the switch of each power sources before and during the installation to avoid electric shock.
- For optimum operation of this inverter, please follow required specification to select appropriate cable size and necessary protective device.
- Do not connect or disconnect any connections when the inverter is working.
- Do not open the terminal cover when the inverter working.
- Make sure the inverter is well grounding.
- Never cause AC output and DC input short circuited.
- Do not disassembly this unit, for all repair and maintenance, please take it to the professional service center.
- Never charge a frozen battery.
- Please keep children away from touching or mishandling the inverter.
- Please make sure that this inverter is the only input power source for the load, do not use it in parallel with other input AC power sources to avoid damage.

02 Production Instructions

2.1 Basic Features

2.1.1 Function

Saturn series is also known as hybrid inverter or storage inverter, which is mainly used to combine the PV array, lithium or lead-acid battery, generator, loads and power grid to realize intelligent power management and dispatching.

2.1.2 Models

The CESC Saturn 3-8K LVS Pro series hybrid inverter contains 8 models which are listed below:
Saturn 3K LVS Pro, Saturn 3.6K LVS Pro, Saturn 4K LVS Pro, Saturn 4.6K LVS Pro, Saturn 5K LVS Pro, Saturn 6K LVS Pro, Saturn 7.5K LVS Pro, Saturn 8K LVS Pro

2.1.3 Applicable grid type

The applicable grid types of the CESC Saturn 3-8K LVS Pro series hybrid inverter are TN-S, TN-C, TN-C-S and TT. When applied to the TT grid, the voltage of N to PE should be less than 30V. See Figure 2-1 for details:

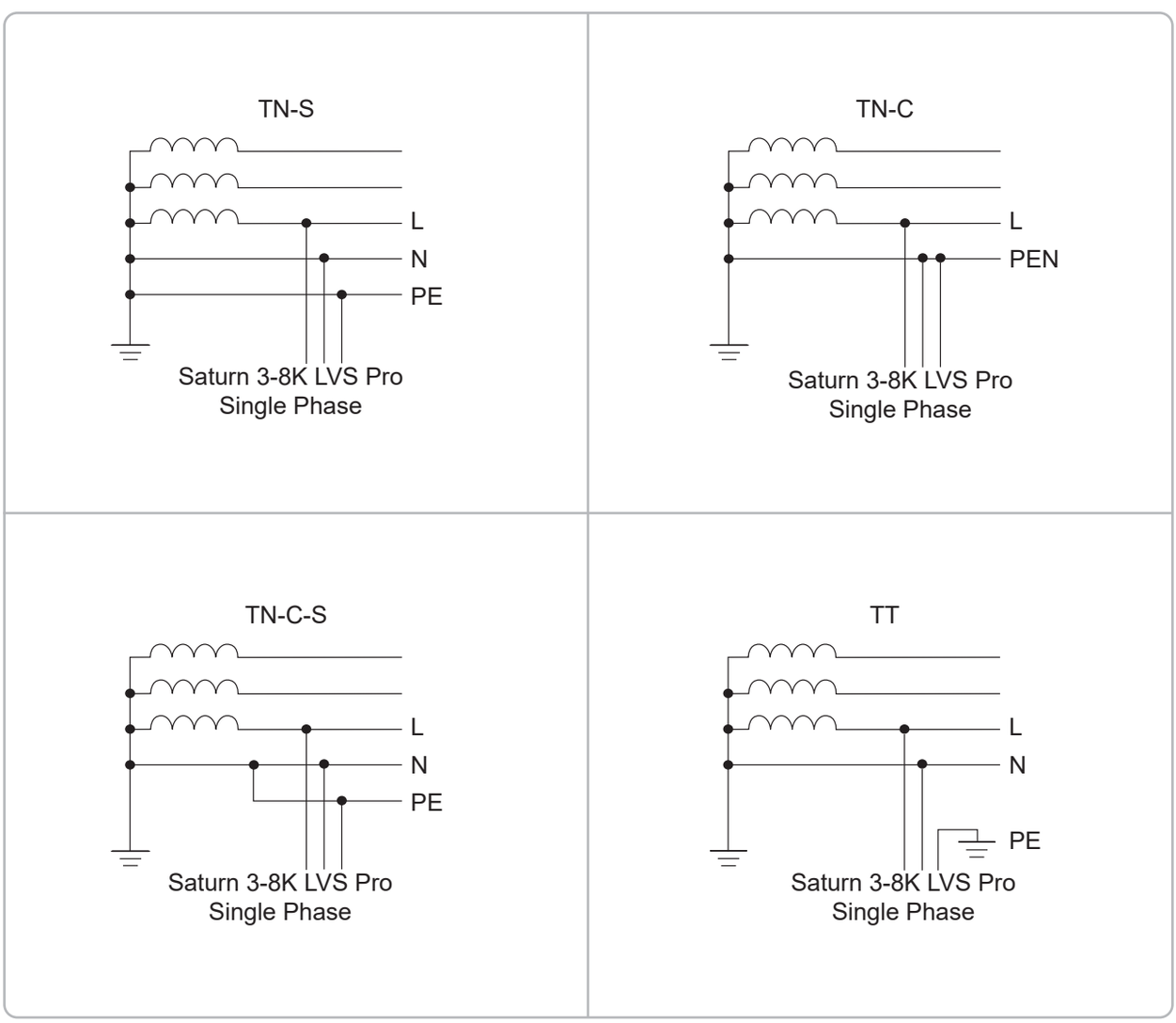

Figure 2-1 Applicable grid types

2.1.4 Schematic diagram of Hybrid System

The hybrid solar system is usually composed of the PV array, hybrid inverter, lithium or lead-acid battery, loads, diesel generator and power grid. As shown in the Figure 2-2:

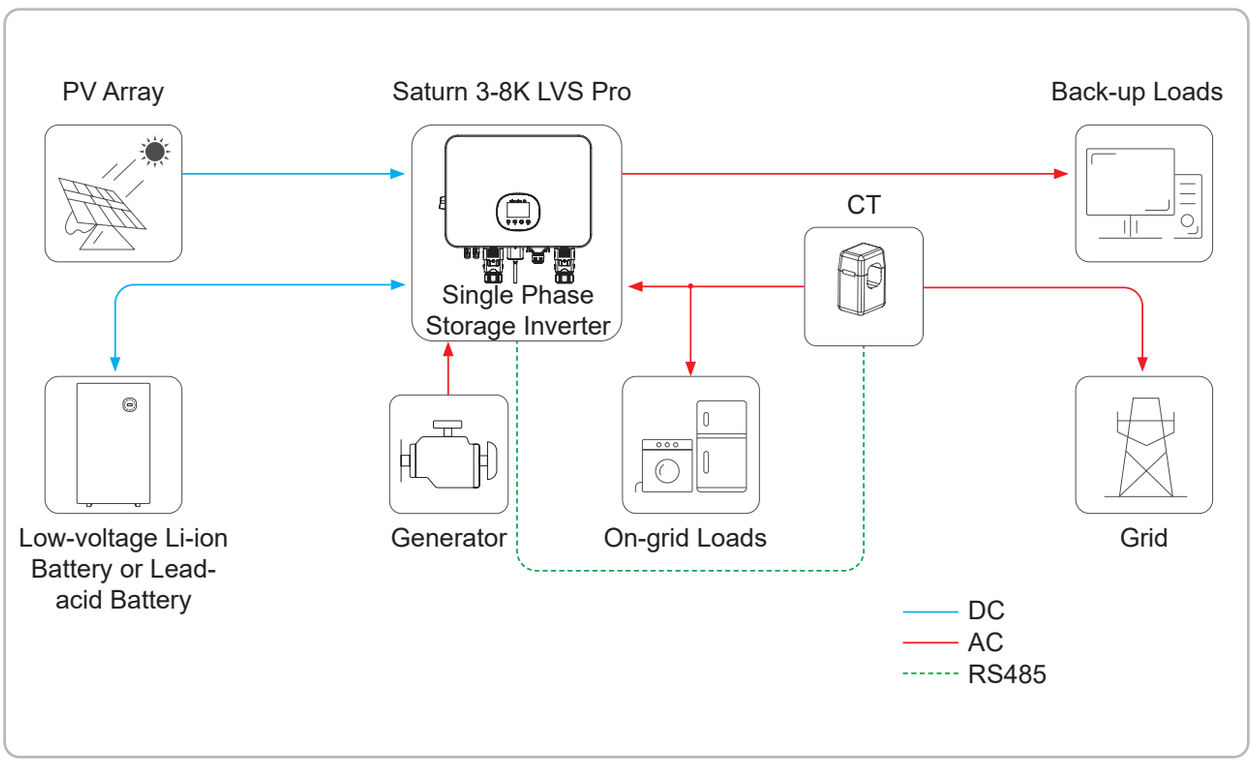

Figure 2-2 Schematic diagram of hybrid system

2.1.5 Operation modes

CESC Saturn hybrid inverter has the following basic operation modes and you can configure the operation mode as per your preference in the App.

General mode

In General mode, when the power from the PV array is sufficient, PV power will supply the loads, battery, and grid by the following sequence:
Loads > Battery > Grid.
PV power will supply the loads first, secondly charge the battery, and then feed to the grid. (You can set the power to the grid to 0W if the local grid operator doesn't allow power to grid.)

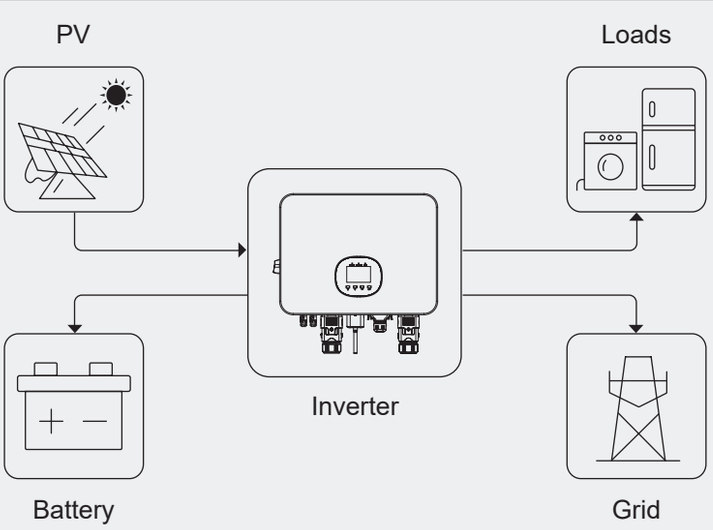

Saturn 3-8K LVS Pro series

When the PV power is insufficient, the battery will discharge to supply loads, and the grid will join in if the battery is not enough to supply loads.	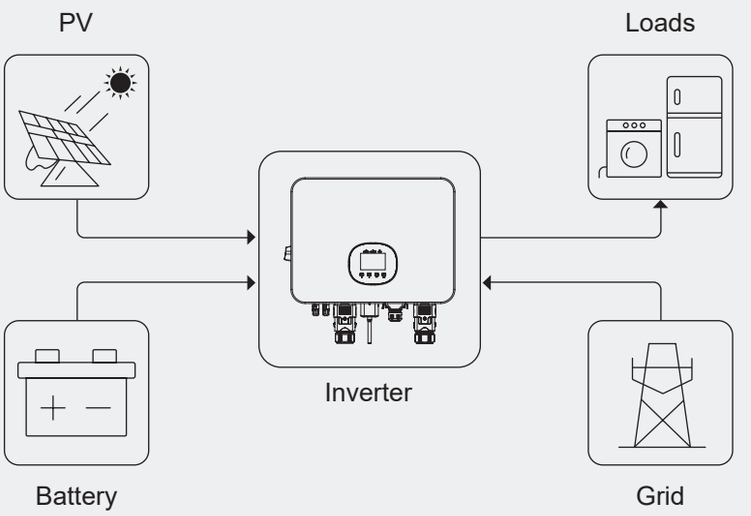
UPS Mode	
In this working mode, the inverter will use the power from PV or grid (Set in the App) to charge the battery until it is fully charged, and as long as the grid is there, the battery won't discharge.	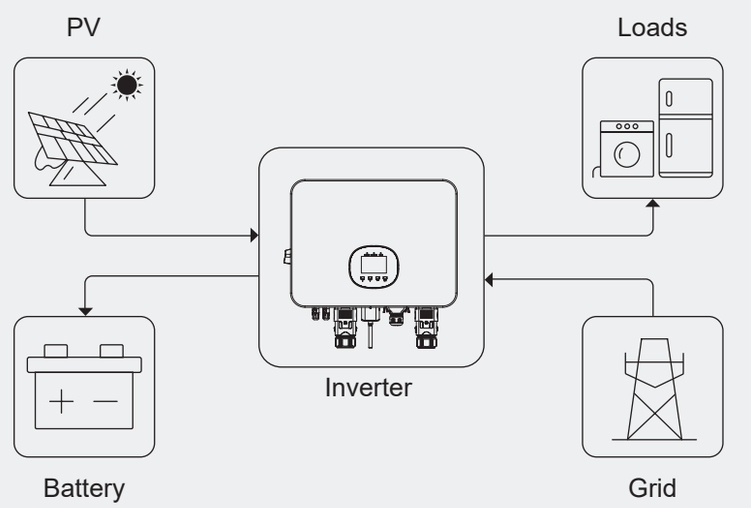
When the grid is cut off, power from PV and battery will supply loads connected in the back-up side (UPS).	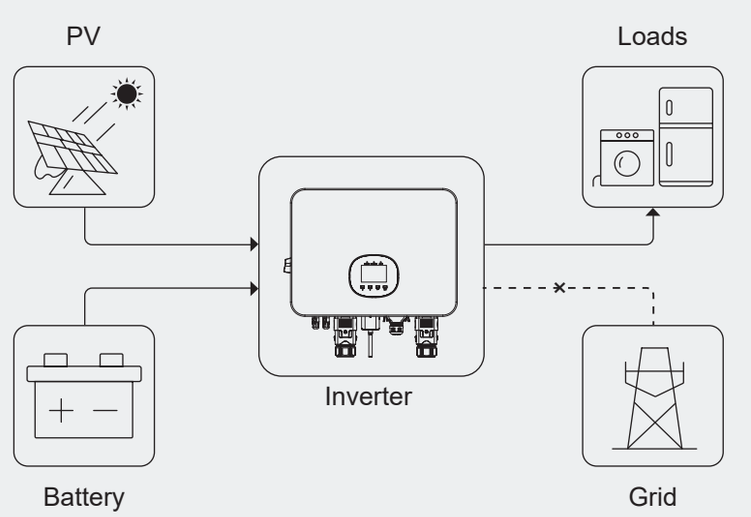

Off-grid Mode

In the purely off-grid mode, power from PV will supply the back-up loads first and then charge the battery if there's surplus.

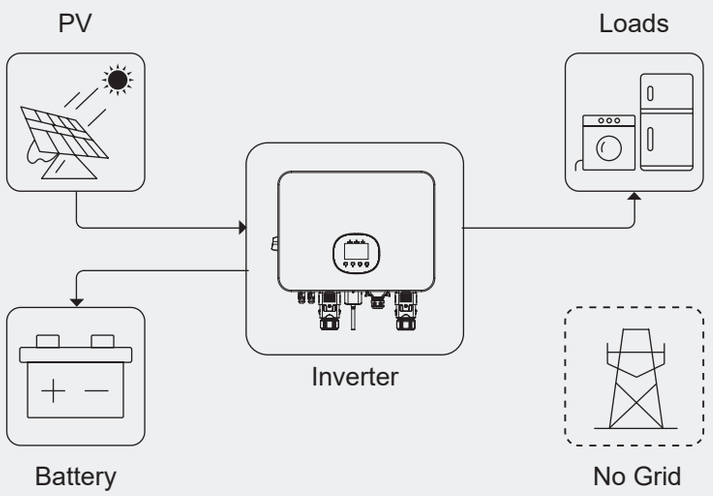

When the power from PV isn't enough, the battery will discharge to supply back-up loads together with PV.

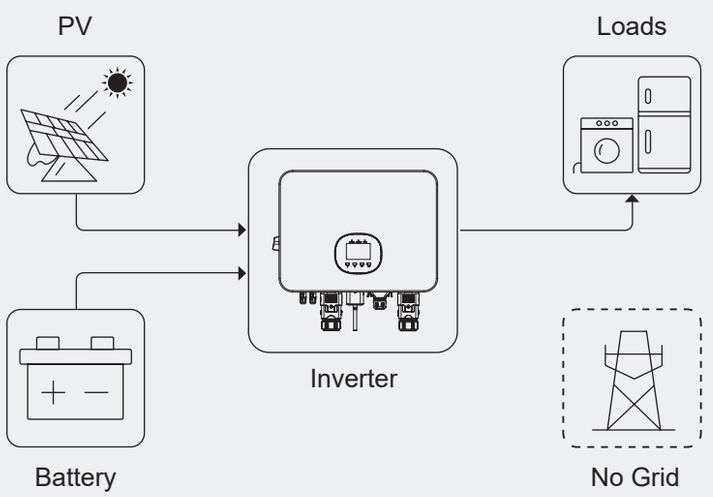

Economic Mode

In this working mode, you can set charge/discharge power and time in the App, inverter will use the power from PV or grid (whether to use can be set in the App) to charge the battery in the predetermined period.

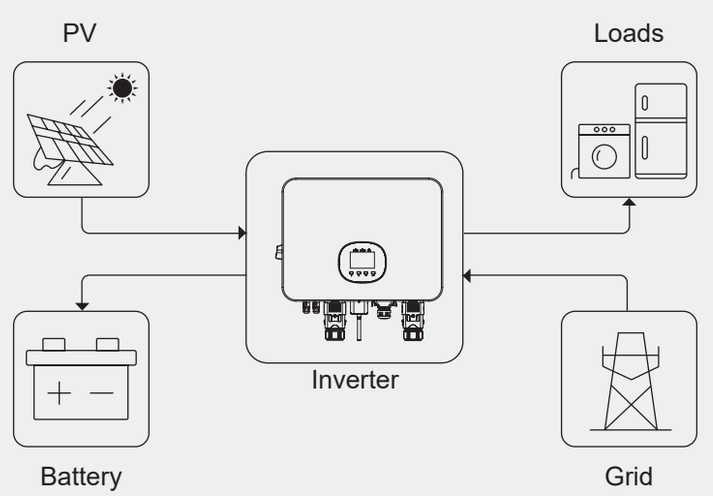

Saturn 3-8K LVS Pro series

Inverter will use power from PV and battery to supply loads in the predetermined period and the insufficient part will be supplied by the grid.	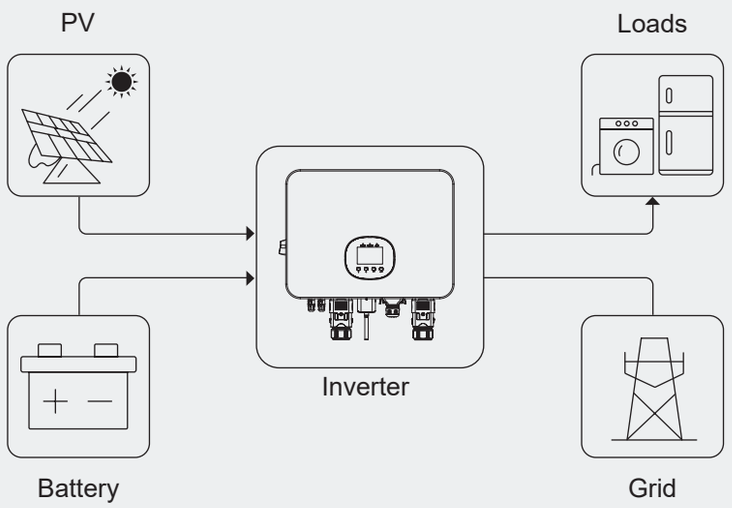

Force Mode

The mode is used only when manual intervention is needed for battery charging and discharging, which is an unconventional operating mode. This mode is effective only when the grid is available. (Please note that both forced charging and discharging of the battery require manual activation and deactivation).

Screen setting steps:
1. Settings → General Config
2. Force Mode → forceChg/forceDischg

APP setting steps:
General Mode → To Set → Force mode → forceChg/forceDischg

In this mode, if “Force Charge” is selected, PV will prioritize charging the battery. If PV is insufficient, the grid will join to charge the battery together.	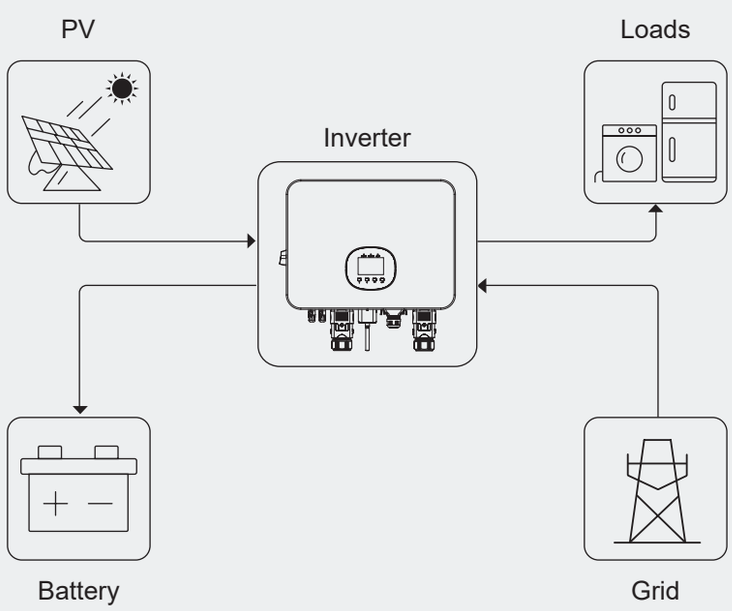

In this mode, if “Force Discharge” is selected, the battery will discharge to both the load and the grid. (If Export Limitation has been enabled, it will remain effective at this time.)	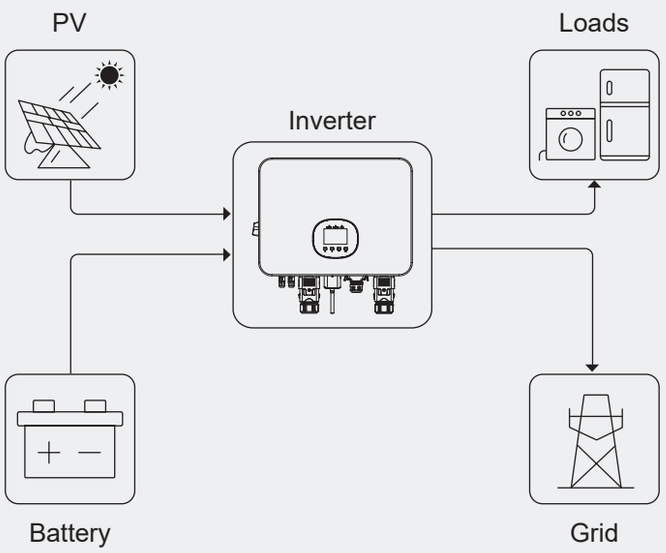

ATTENTION

- Force Mode is for battery maintenance only and should be used under the guidance of CESC maintenance personnel.

Time-of-use (TOU) Mode

TOU Manual Mode and TOU Automatic Mode can help increase the electricity sales revenue and reduce electricity purchase expenses in a changing electricity pricing environment. Based on the real electricity price situation, the TOU mode allows to set the same or different battery charging and discharging strategy for the different days of the week.

- **TOU Manual Mode**

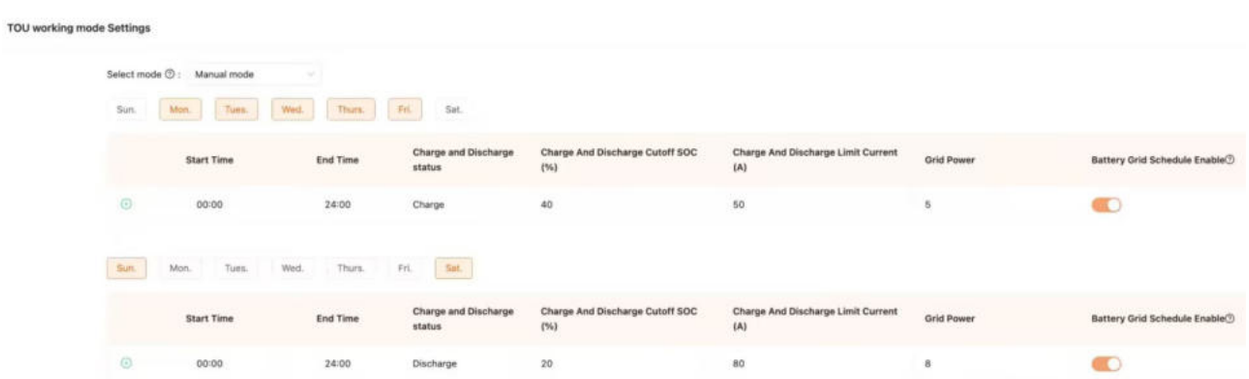

- Start Time: start time for the set charging or discharging time period
- End Time: end time for the set charging or discharging time period
- Charge and Discharge status: set whether to charge or discharge in the current time period
- Charge And Discharge Cutoff SOC(%): stop the set charging or discharging operation when the target Battery SOC has been reached
- Charge And Discharge Limit Current(A):Limit the current allowed for battery charging or discharging
- Grid Power: Limit the allowed grid input/output power
- Battery Grid Schedule Enable: set whether it is allowed to sell the battery power to grid and use the grid power to charge battery

Saturn 3-8K LVS Pro series

- **TOU Automatic Mode**

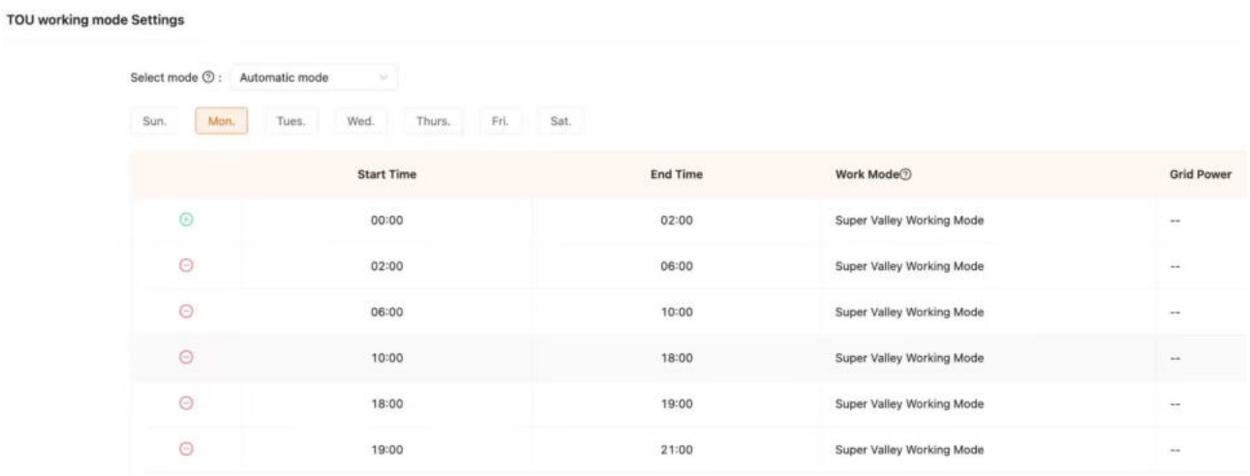

Use those prepared TOU automatic status to fit the dynamic local electricity prices (the TOU automatic mode is only recommended for those countries with dynamic electricity price and data API):

- Peak Price Period: self-use, can set the selling power to the grid.
- Parity Price Period: self-use.
- Valley Price Period: keep 80% power for self-use, can set the purchasing power from the grid.
- Super Valley Price Period: charge the battery with full power, keep 95% power for self-use.
- Negative Price Period: stop PV from charging the battery, purchase electricity from the grid at full power to charge the battery.

2.1.6 Smart Load

The CESC Saturn 3-8K LVS Pro model supports the smart load management funtion.
The smart load function mainly serves user's heavy critical loads, such as air conditioning, water heaters, water pumps, etc. This function is only activated when there is surplus electricity in the PV or battery, and will intelligently start and stop based on the SOC of the lithium battery (or battery voltage for lead-acid battery), PV power generation, and grid status to avoid excessive battery discharge, while prioritizing the power protection of critical loads.

NOTE

- The smart load feature uses the same AC terminal port for the Diesel Generator, please check the silk-screen printing "GEN L" & "GEN N" to distinguish the correct AC ports for the smart load.
- The smart load feature can only be managed on the CESC monitoring portal, it is not supported to manage the smart load feature on the inverter screen.

Once the smart load feature has been enabled on the monitoring portal, user can see the smart load on the power map. The smart load from user's side needs to support the dry-contact control. The dry-contact output ports for the inverter will be "Port4 No.6 -- D01+" and "Port4 No.4 -- D01-" in the communication block.

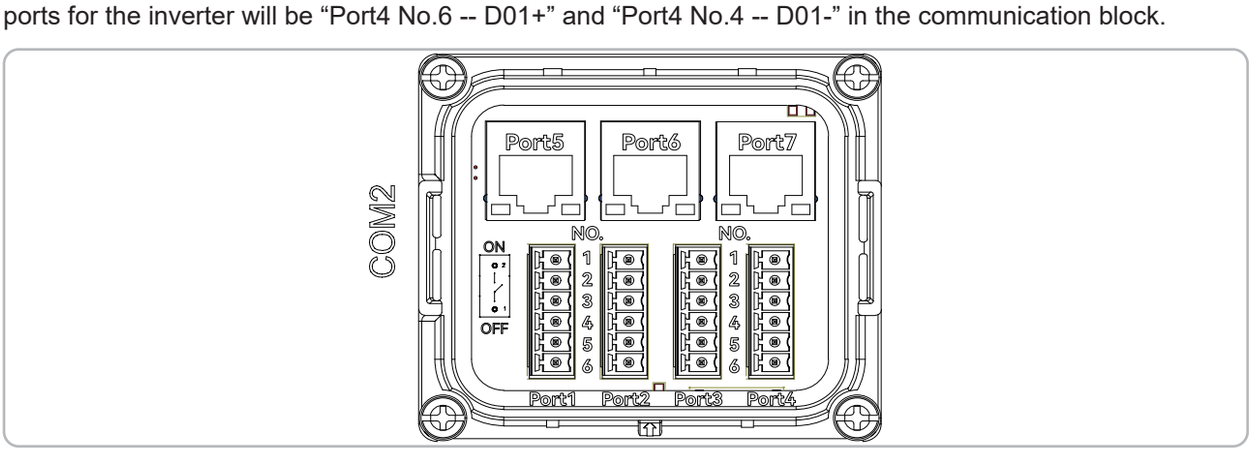

For lithium battery, the battery Power On and Power Off value uses the battery SOC.
For lead-acid battery, the battery Power On and Power Off value uses the battery voltage.
In the off-grid and on-grid status, battery will discharge to power your Smart Load first until reaching the set Power Off value, and then stop discharging.
Once the battery has been charged back to the set Power On value, the battery will discharge to power your Smart Load again.
Different Power On and Power Off value can be set for on-grid and off-grid status.

2.1.7 Storage conditions

① Inverter must be stored in its original packaging.
② The storage temperature should be in the range of -30 ° C and + 60 ° C, and the relative humidity stored should be less than 90%.
③ If a batch of inverters needs to be stored, the height of each pile should be no more than 6 levels.

2.1.8 Storage conditions

Handling
- Wear personal protective gears such as protective gloves and shoes when manually moving the equipment.
- To move hybrid inverter by hand, approach to the object, squat down, and then lift the object gently and stably by the force of the legs instead of your back. Do not lift it suddenly or turn your body around.

Transportation
- Choose sea, roads, air and railway in good conditions for transportation. Avoid tilt or jolt during transportation.
- When transporting the equipment using a pallet truck or forklift, ensure that the tines are properly positioned so that the equipment does not topple.
- Before moving the equipment, secure it to the pallet truck or forklift using ropes. When moving the equipment, assign dedicated personnel to take care of it.

2.2 Appearance Introduction

2.2.1 Inverter front view

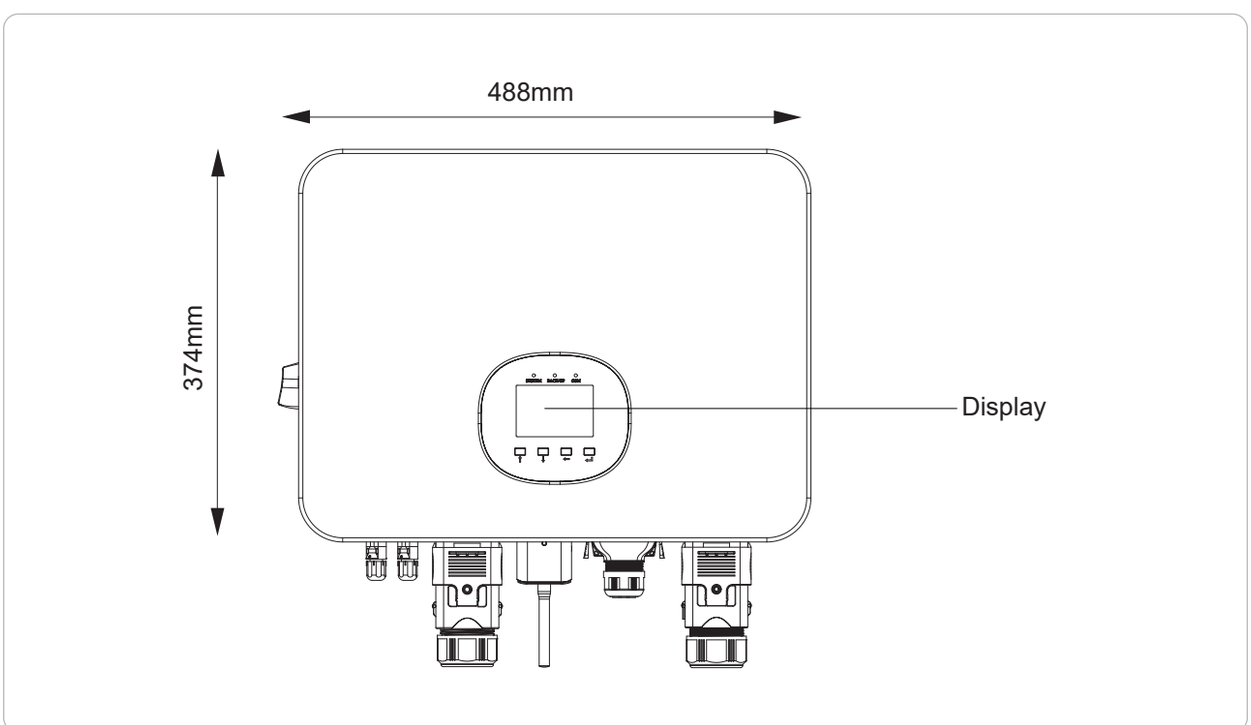

Figure 2- 3 Front view

Saturn 3-8K LVS Pro series

2.2.2 Inverter side view

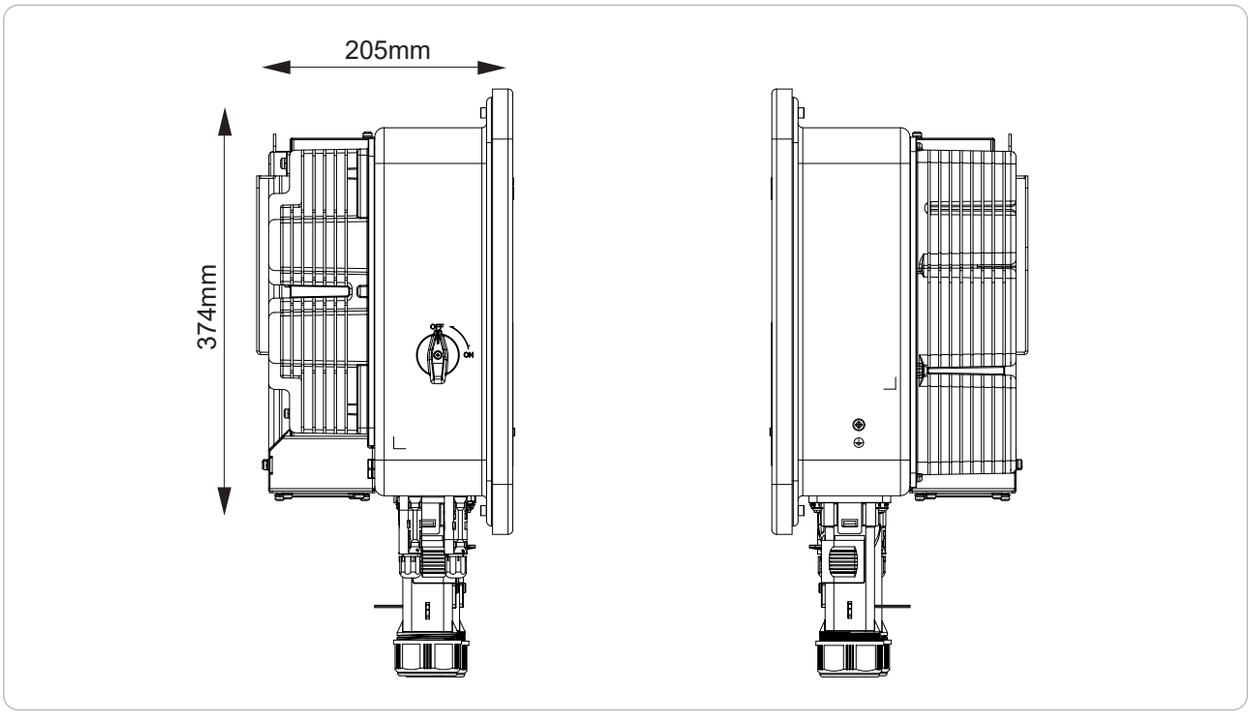

Figure 2- 4 Side view

2.2.3 Inverter bottom view

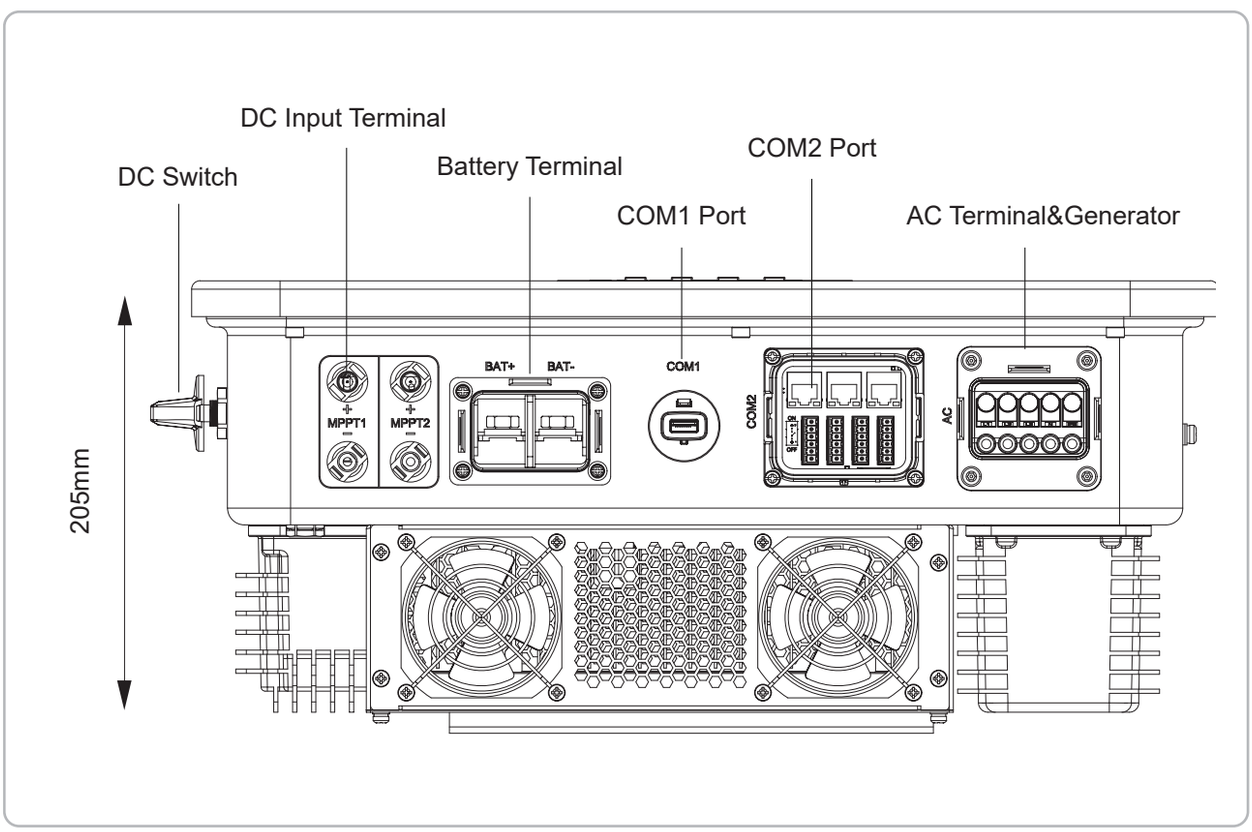

Figure 2-5 Bottom view 6kW~8kW（Fan Cooling, Dual MPPT）

12

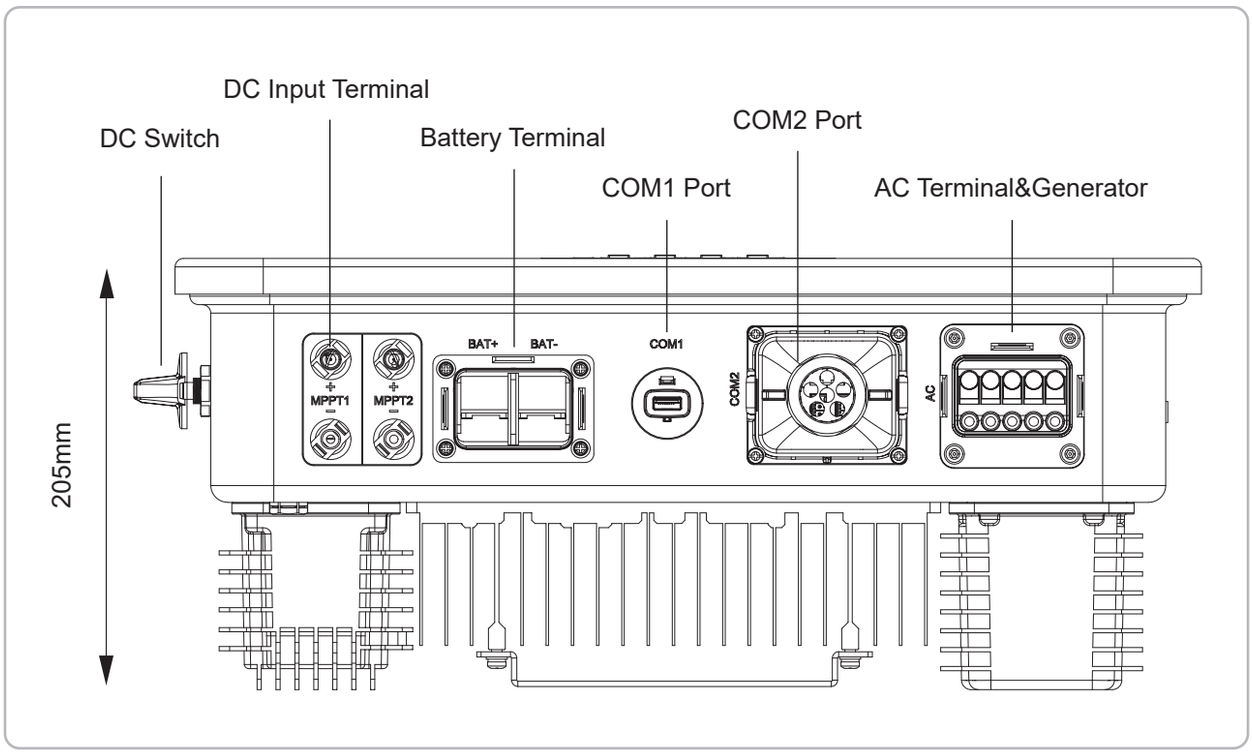

Figure 2-6 Bottom view 4~5kW(Natural Convection, Dual MPPT)

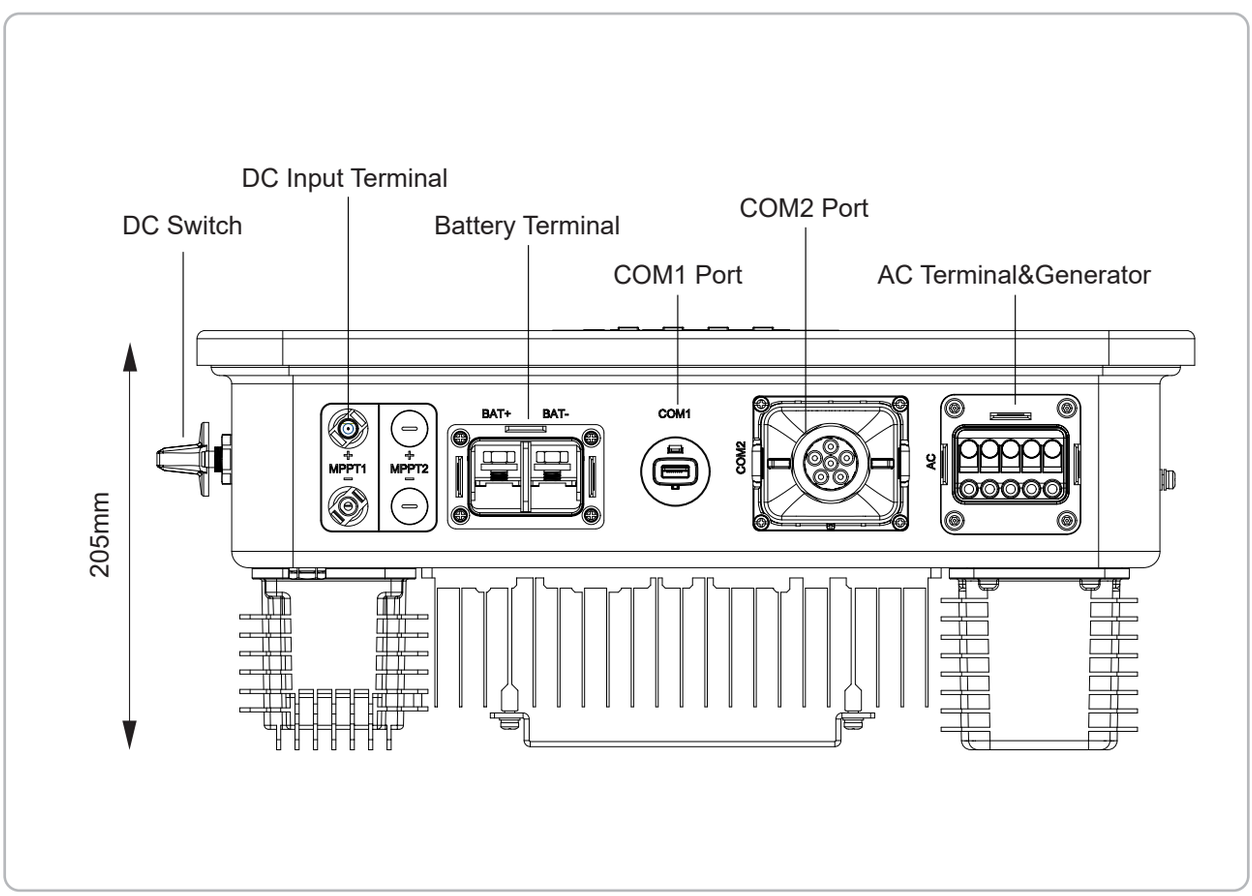

Figure 2-7 Bottom view 3~3.6kW(Natural Convection, Single MPPT)

2.2.4 Inverter back view

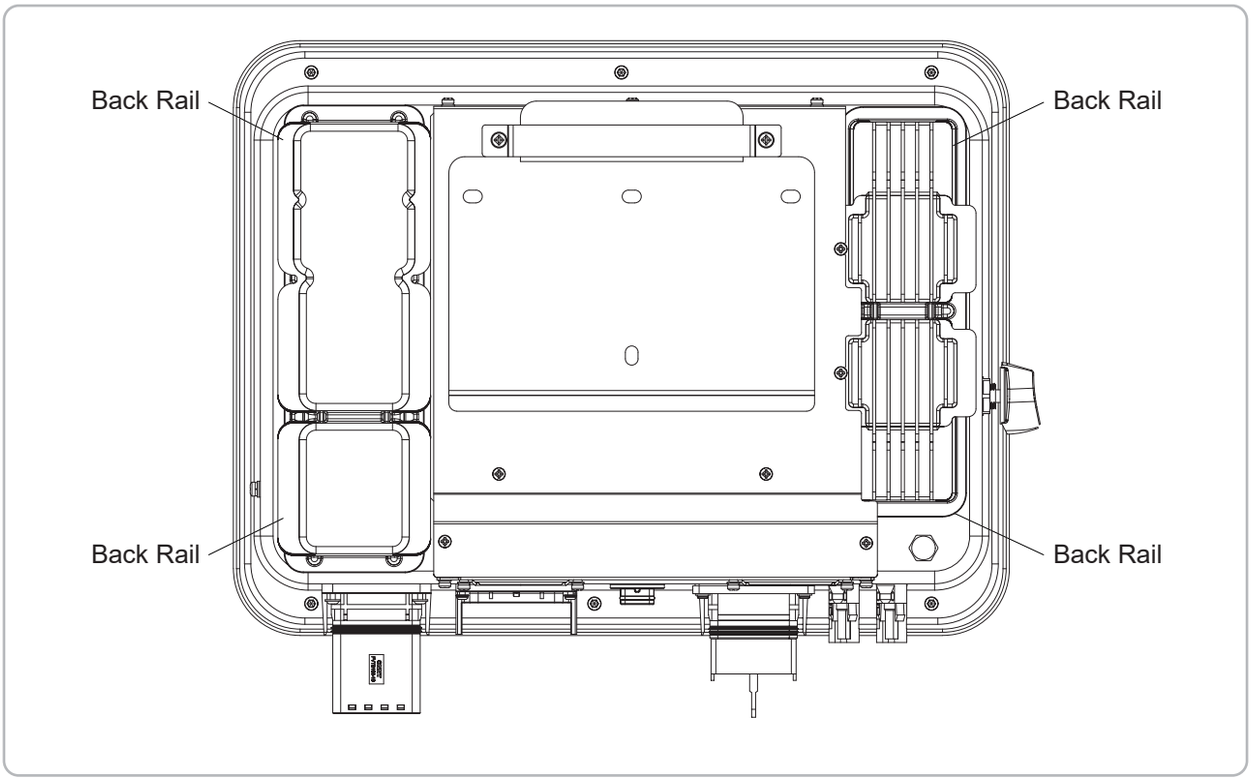

Figure 2-8 Back view

2.3 Appearance Introduction

The package of the inverter includes the following accessories. Please check whether the accessories in the packing box are complete at the first time when receiving the goods.
See Figure 2-9 for the packing list:

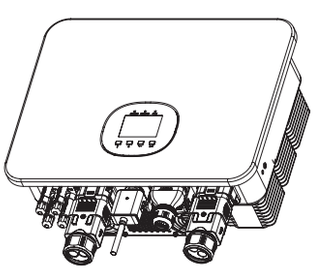 Inverter×1	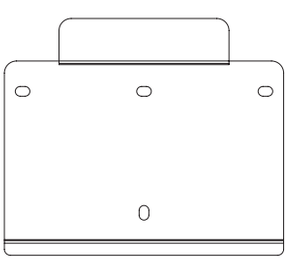 Back Bracket×1	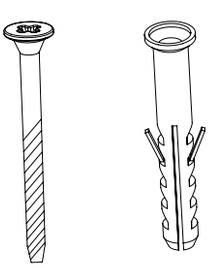 Expansion Bolt × 4
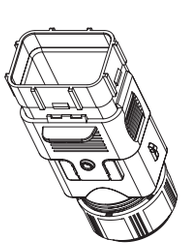 AC Waterproof Cover	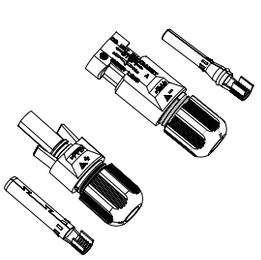 PV Terminal × 2	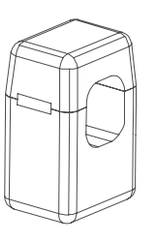 CT (16D90A/ϕ16 90A:45mA Line10M)

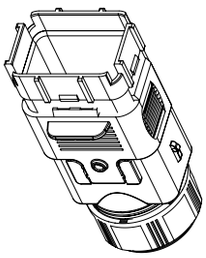 Battery Waterproof Cover	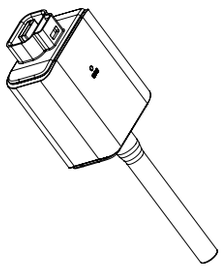 Monitoring Device (Optional)	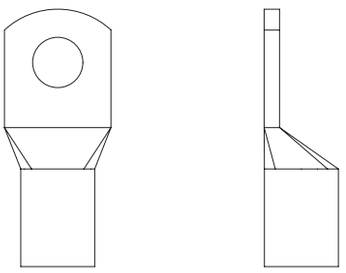 Battery Crimping OT terminal × 2
 AC Crimping terminal × 10	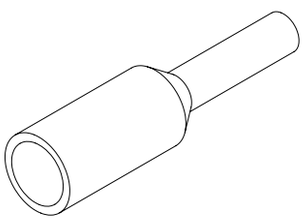 Pinhole terminal ×24 (For communication wiring)	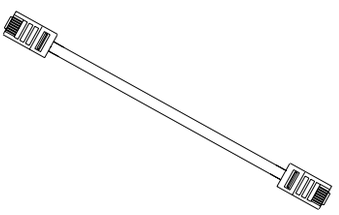 Parallel connection cable (Optional)
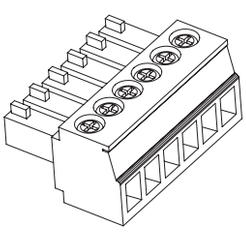 6P communication terminal ×4 (The model of the 6P communication terminal shall be subject to the actual model received. The picture is for reference only)	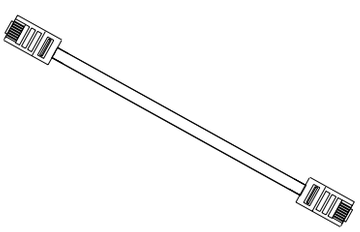 BMS Cable	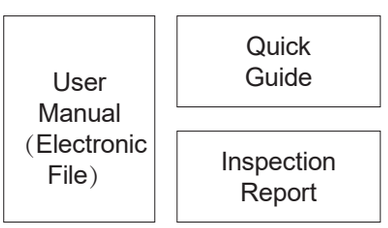 User Guide

Figure 2-9 Packing list

03 Product Installation

3.1 Selection of Installation Location

The CESC Saturn 3-8K LVS Pro series hybrid inverters designed with IP66 protection enclosure for indoor and outdoor installations. When selecting an inverter installation location, the following factors should be considered:

1) The wall on which the inverters mounted must be able to withstand the weight of the inverter for a long time.
2) The inverter needs to be installed in a well-ventilated environment.
3) Do not expose the inverter directly to strong sunlight to prevent the power derating due to excessive temperature.
4) The inverter should be installed in a place with shelter to prevent direct exposure to sunlight and rain.
5) Install the inverter at the eye level for easy inspection of screen data and further maintenance.
6) The ambient temperature of the inverter installation location should be between -20°C and 60°C.
7) The surface temperature of the inverter may reach up to 75°C. To avoid risk of burns, do not touch the inverter while it's operating and inverter must be installed out of reaching of children.

3.1.1 Recommended installation location of the inverter, as shown in Figure 3-1:

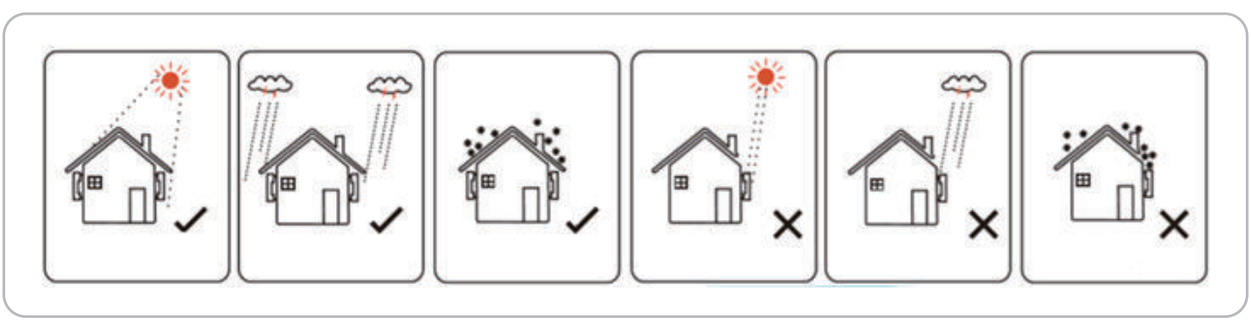

Figure 3-1 Recommended installation location

⚠ WARNING

- Do not put flammable and explosive articles around the inverter.

3.1.2 The requirements for inverter installation spacing are shown in Figure 3-2:

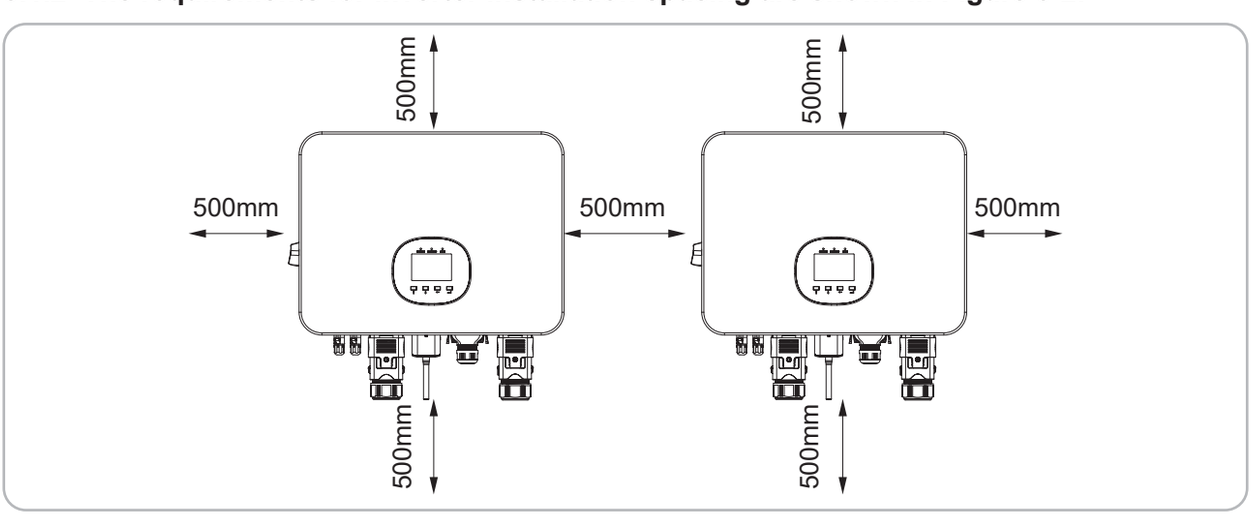

Figure 3-2 Recommended installation space

3.1.3 Installation angle

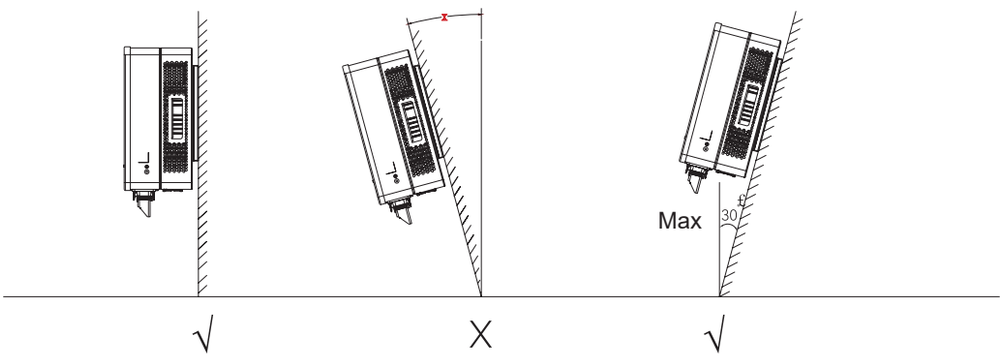

Figure 3-3 Recommended installation angle

3.2 Mounting the Inverter

3.2.1 Wall bracket installation

Dimensions of wall bracket, see Figure 3-4 (the unit in the picture is millimeters):

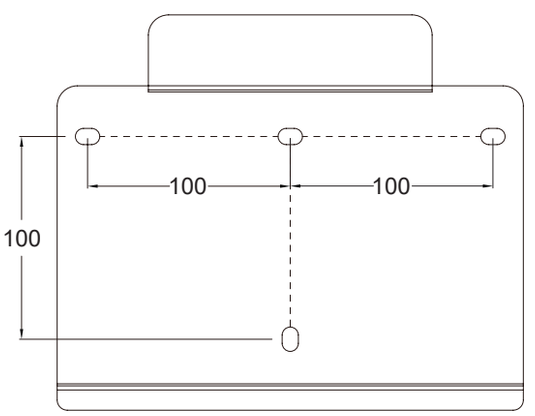

Figure 3-4 Dimensions of wall bracket

1) Use the wall bracket as the template to mark the position of 4 holes on the wall.
See Figure 3-5 for details:

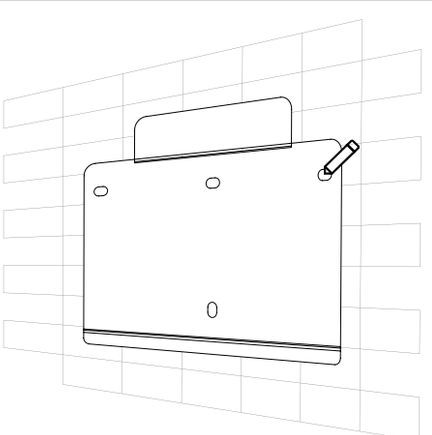

Figure 3-5 Mark the hole position

2) Use an electrical driller with 10mm diameter bit to drill 4 holes on the wall and make sure hole depth is 80mm.

⚠ WARNING

- Before drilling, make sure to avoid the buried water tube and electric wires in the wall to avoid danger.

3) Insert the expansion tubes into the holes and tighten them, then fix the bracket onto the wall with expansion screws by using a cross screwdriver.

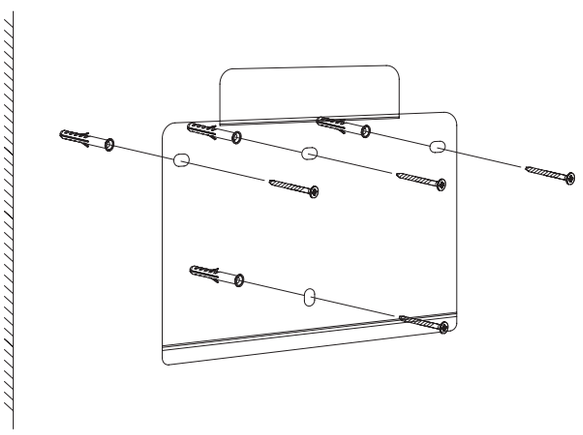

Figure 3-6 Fix the wall bracket

3.2.2 Mounting the inverter

Lift the inverter with both hands, hang the back rail on the fixed wall bracket carefully, see Figure 3-7 for details:

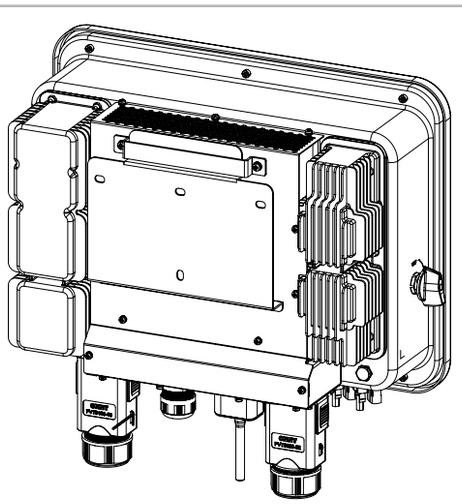

Figure 3-7 Mounting the inverter

04 Electrical Connection

⚠ DANGER

- A high voltage in the conductive part of the inverter may cause an electric shock. When performing any installation on the inverter, make sure that the AC and DC sides of the inverter are completely de-energized.

⚠ WARNING

- Static may cause damage to the electronic components of the inverter. Anti-static measures should be taken during the repairing or installation.
- All wiring must be performed by a professional person.

ⓘ ATTENTION

- Moisture and dust can damage the inverter, ensure the cable gland is securely tightened during installation. The warranty claim will be invalided if the inverter damaged by the cable connector not well installed.

4.1 CESC Saturn Hybrid Inverter Electrical Wiring Diagram

This diagram shows CESC Saturn 3-8K LVS Pro series hybrid inverter wiring structure and composition, concerning the real project, the installation and wiring have to be in line with the local standards.

Saturn 3-8K LVS Pro series

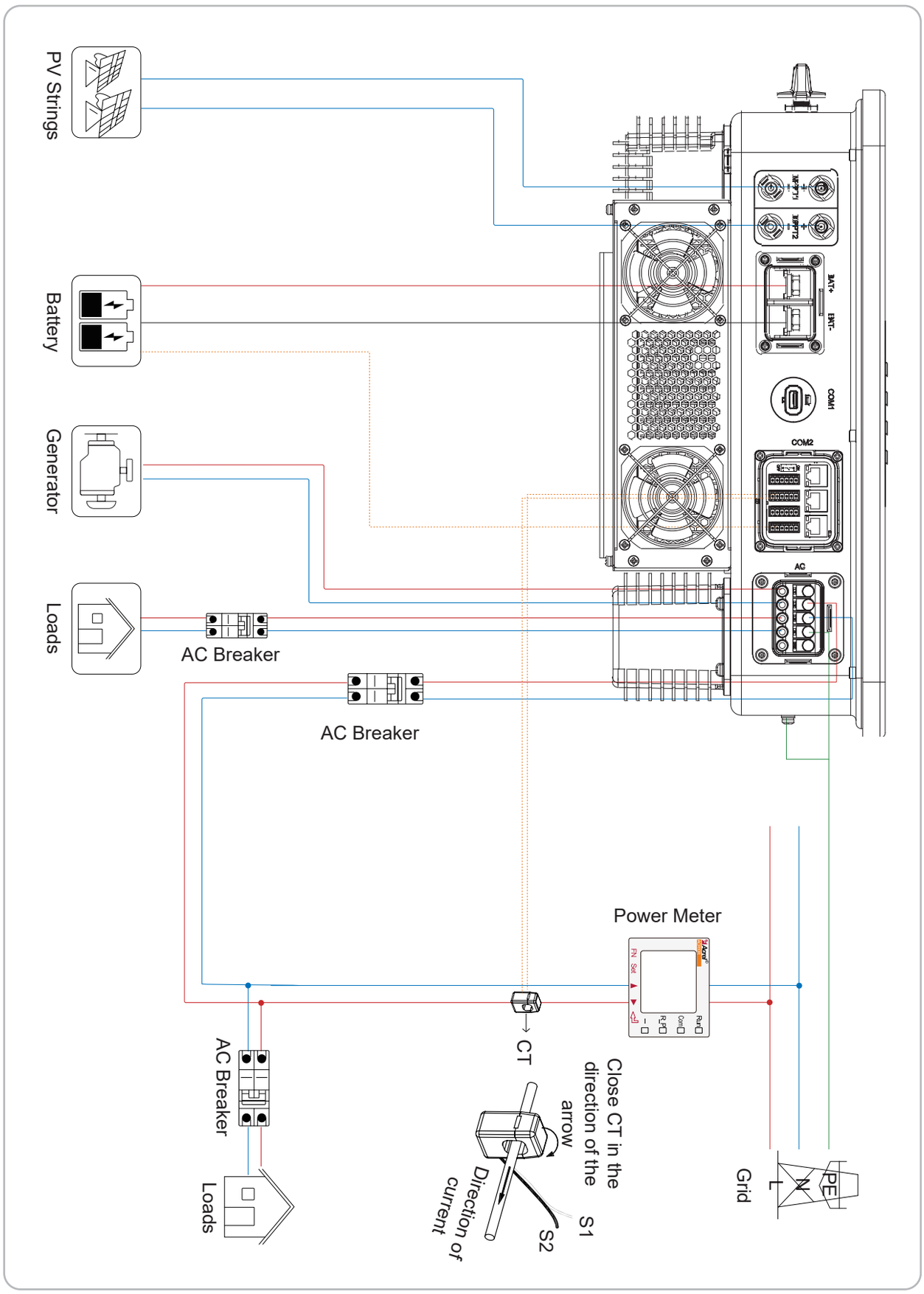

Figure 4-1 Standard wiring diagram

20

Single inverter wiring diagram
This diagram is an example without special requirement on electrical wiring connection.

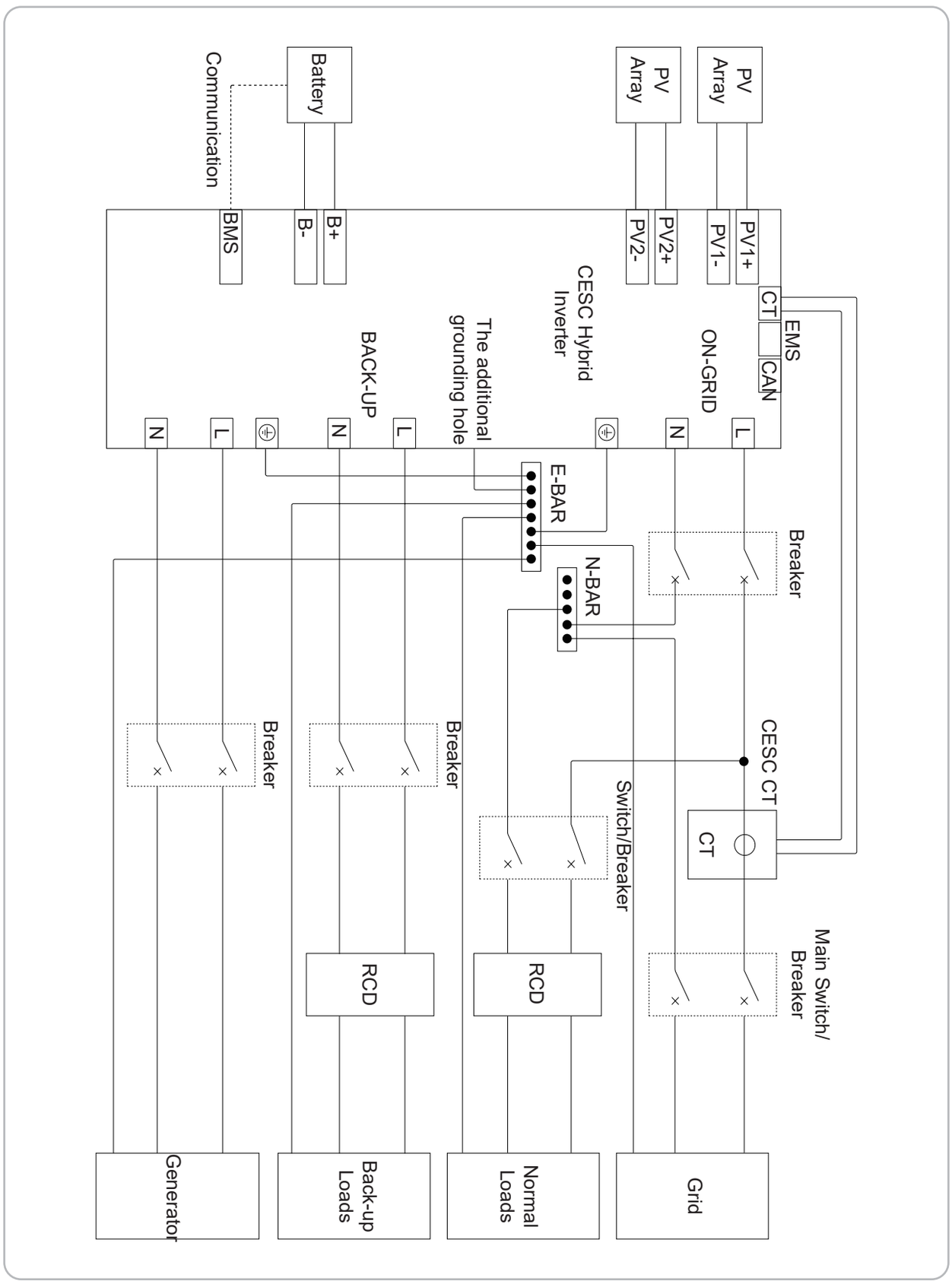

Figure 4-2 Standard wiring diagram

Saturn 3-8K LVS Pro series

This diagram is an example for Australia and New Zealand. Neutral line of AC supply must not be isolated or switched.

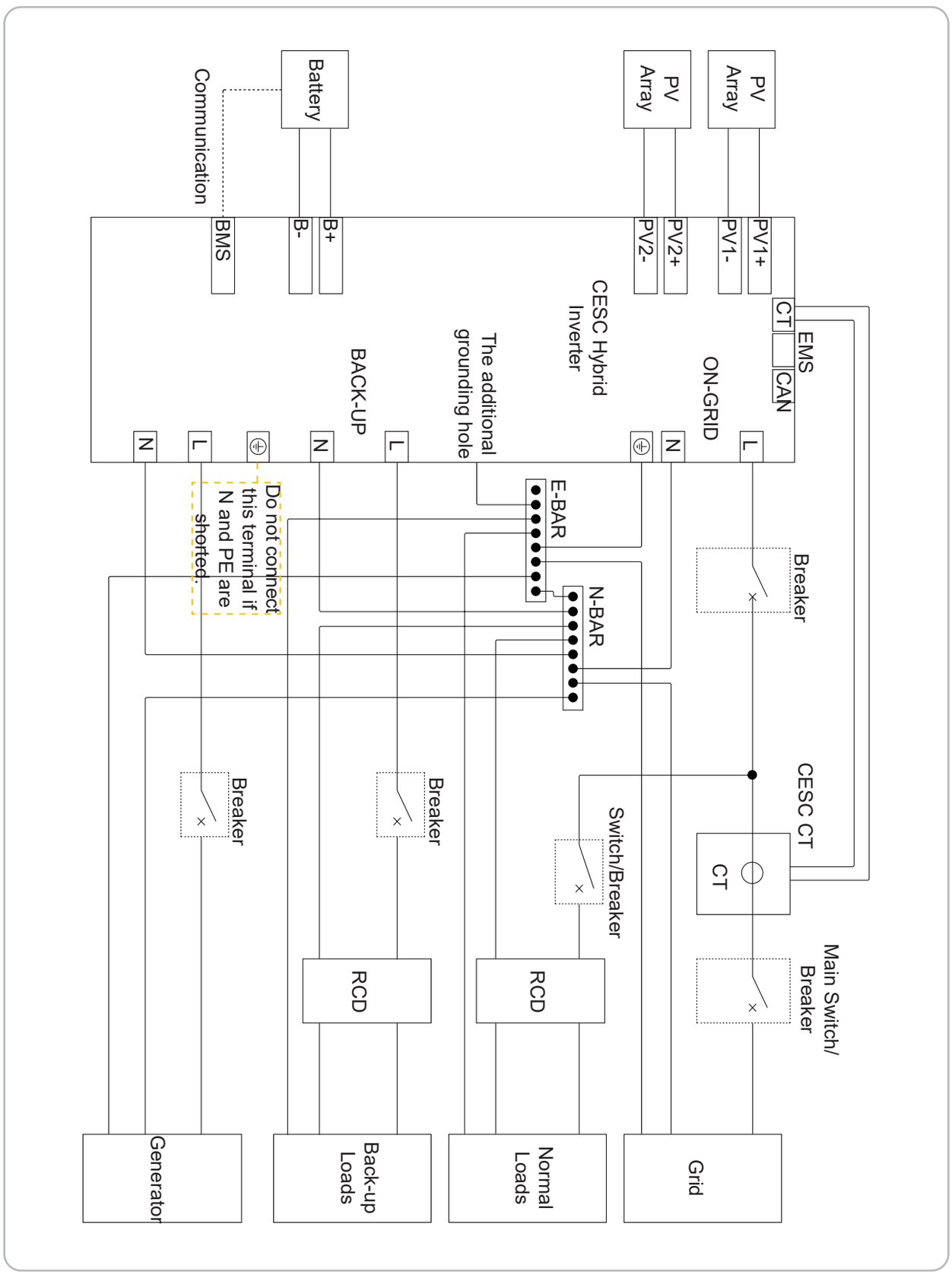

Figure 4-3 Australia wiring diagram

4.2 External Ground Connection

Connect the inverter and ground bar through PE wire to achieve the purpose of grounding protection. Please always remember wiring the PE wire before wiring other wires.

⚠ DANGER

- Do not connect the N-wire as a protective ground wire to the inverter casing. Otherwise, it may cause electric shock.

ⓘ ATTENTION

- Good grounding is good for resisting surge voltage shock and improving EMI performance. Inverters must be well-grounded.
- For a system with only one inverter, just ground the PE cable.
- For a multi-inverter system, all inverters PE wire need to be connected to the same grounding copper bar to ensure equipotential bonding.

Ground terminal connection steps:
1) The external grounding terminal is located in the lower right side of the inverter.
2) Fix the grounding terminal to the PE wire with a proper tool and lock the grounding terminal to the grounding hole in the lower right side of the inverter, as shown in Figure 4-4.

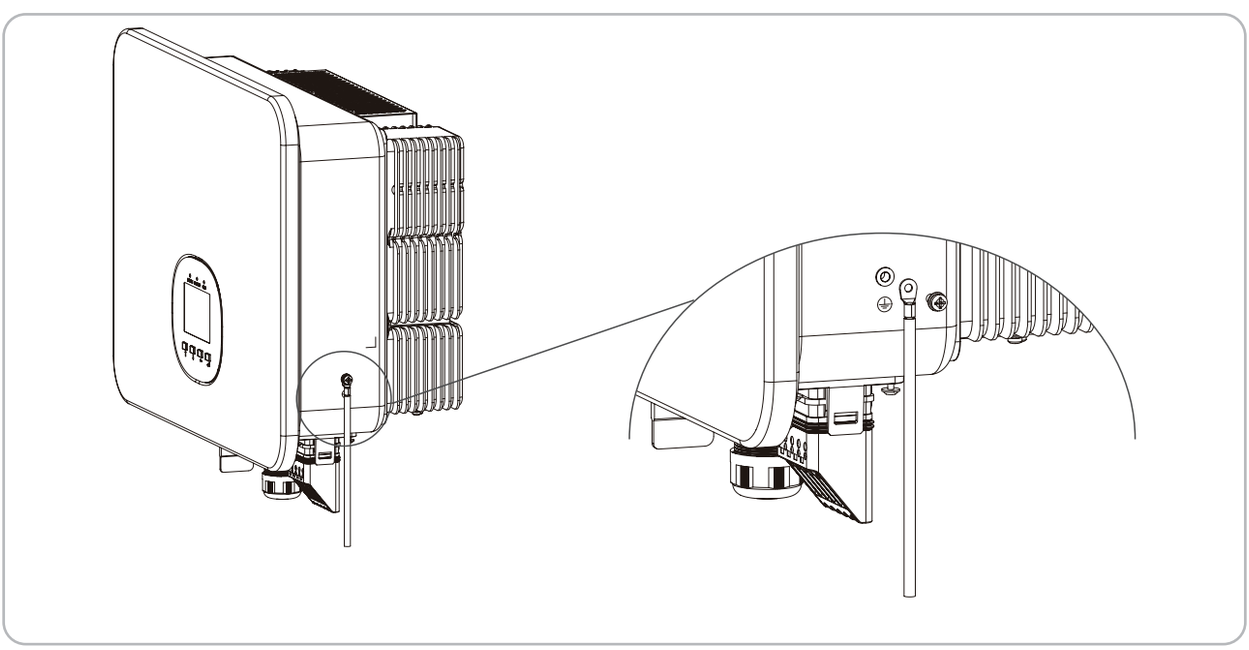

Figure 4-4 Grounding terminal connection

4.3 PV String Connection

The following must be considered when making electrical connections to the inverter:
1) Open circuit Voltage (Voc) of PV modules not exceeds max. PV array open circuit voltage of inverter.
2) Open circuit Voltage (Voc) of PV modules should be higher than min. start voltage.
3)The PV modules used to connected to this inverter shall be Class A rating certified according to IEC 61730.

Saturn 3-8K LVS Pro series

Inverter Model	3kW	3.6kW	4kW	4.6kW	5kW	6kW	7.5kW	8kW
PV Input Voltage	360V(Optimal Operating Voltage)							
PV Array MPPT Voltage Range	80V~550V							
No. of MPP Tracker	1	1	2	2	2	2	2	2
No. of String per MPP Tracker	1	1	1	1	1	1	1	1

⚠ WARNING

- Do not ground the positive or negative pole of the PV string, otherwise it will cause serious damage to the inverter.
- The voltage of photovoltaic modules is very high, and is dangerous voltage. When wiring, please follow the safe electricity regulations.

ⓘ ATTENTION

- The number and type of the PV panels connected in the two strings of one MPPT must be same.
- Do not use other brands or other types of PV terminals other than the PV terminal in the accessory package. CESC has the right to refuse all damages caused by the mixed-use of terminals.

4.3.1 DC connector assembly procedures

1) Select the appropriate photovoltaic cable:

Cable type	Conductor cross-sectional area (mm²)	
General photovoltaic cable	Scope (mm^2)	Recommended value (mm^2)
	2.5-4.0	4.0

2) Peel off the DC cable insulation sleeve for 7 mm, as shown in Figure 4-5

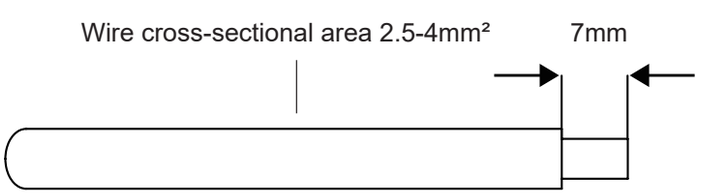

Figure 4-5

3) Disassemble the connector in the accessory bag, as shown in Figure 4-6:

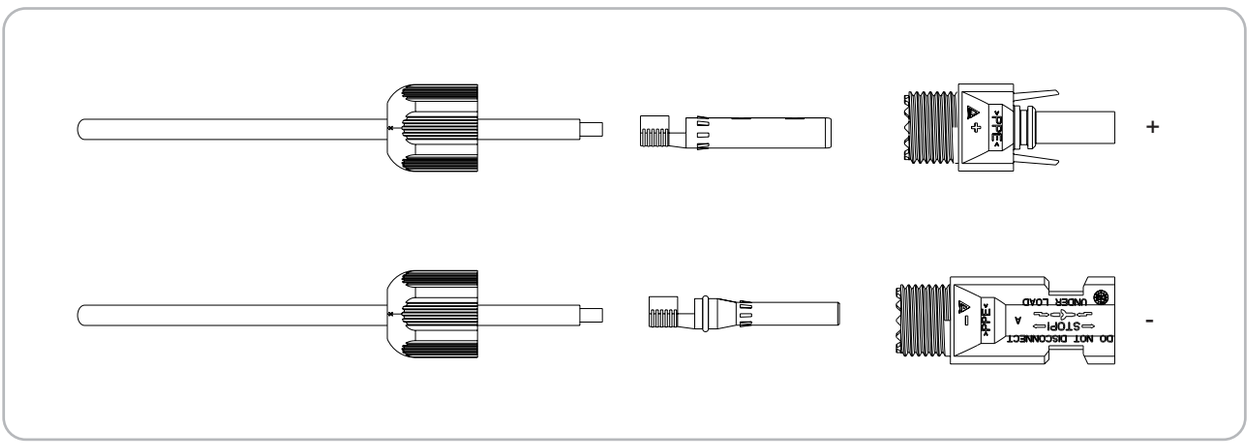

Figure 4-6

4) Insert the DC cable through the DC connector nut into the metal terminal and press the terminal with a professional crimping plier (pull back the cable with some power to check if the terminal is well connected to the cable), as shown in Figure 4-7:

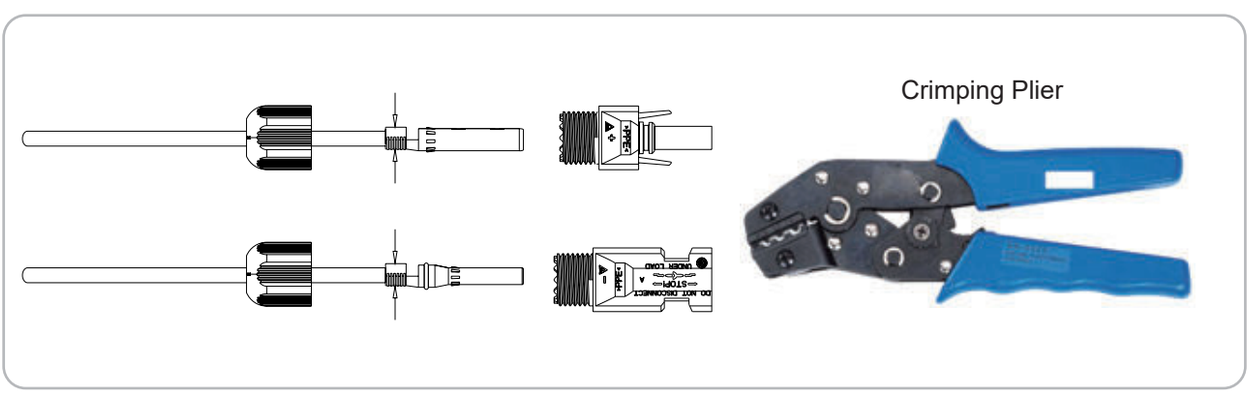

Figure 4-7

5) Insert the positive and negative cables into the corresponding positive and negative connectors, pull back the cable to ensure that the terminal is tightly attached in the connector.

6) Use an open-end wrench to screw the nut to the end to ensure that the terminal is well sealed, as shown in Figure 4-8:

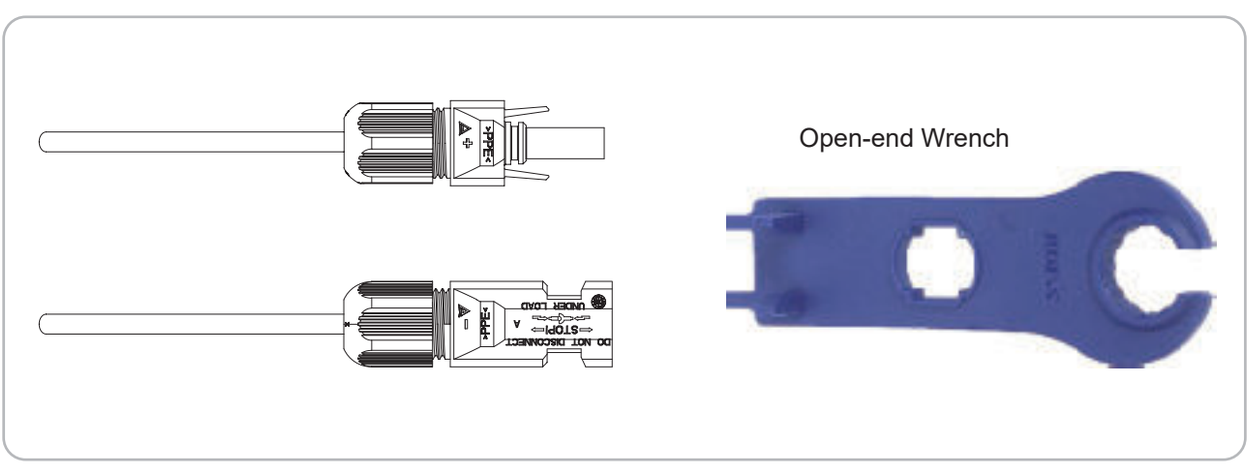

Figure 4-8

⚠ WARNING

- Before assembling the DC connector, make sure that the cable polarity is correct.
- Use a multimeter to measure the voltage of the DC input string, verify the polarity of the DC input cable, and ensure that each string voltage is within 600V.

7) Insert the positive and negative connectors into the inverter DC input terminals respectively, and a “click” sound represents the assembly in place, as shown in Figure 4-9:

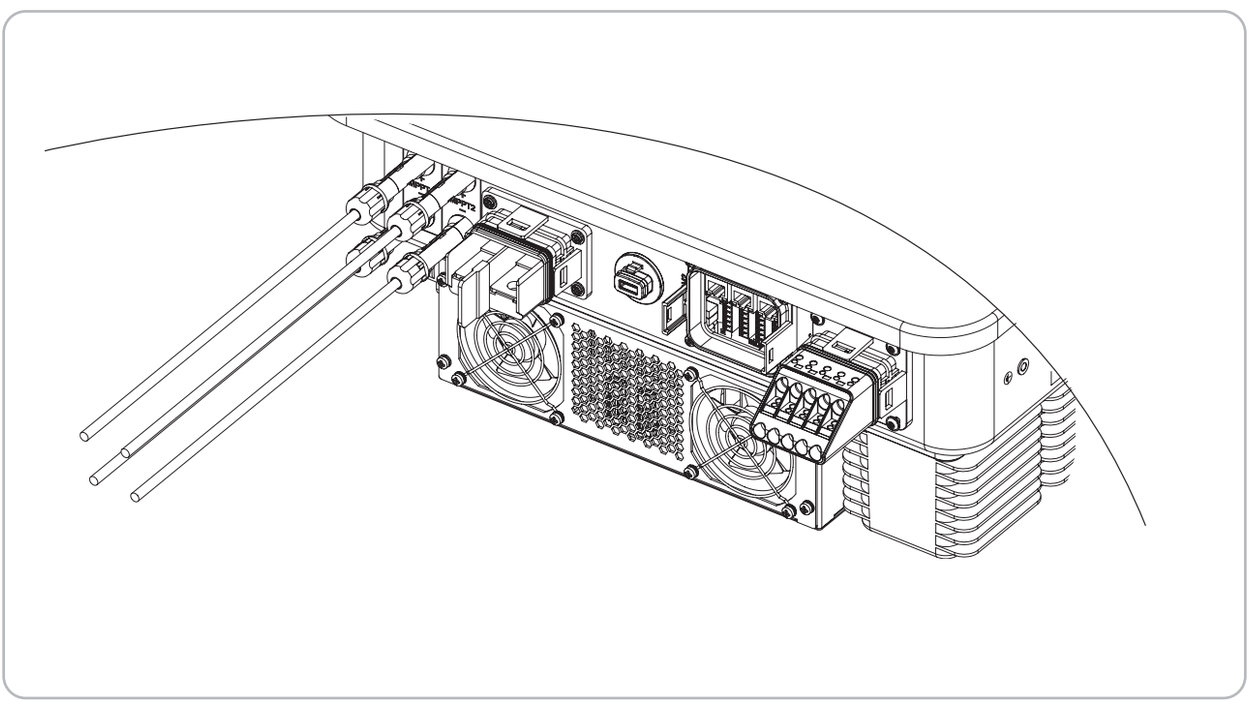

Figure 4-9

4.4 AC Side Connection

4.4.1 AC side connection requirements

1.The following principles must be considered when making AC output connection:
1) An independent AC breaker is required in on-grid, back up and generator side, and any loads cannot be connected with inverter directly.
2) Before making the connection of AC cable, please confirm all DC & AC power source are disconnected from the inverter.
3) The CESC Saturn 3-8K LVS Pro series single-phase hybrid inverter applies to the single-phase power grid with a voltage of 220/230V and a frequency of 50/60Hz.

2.Residual Current Device
All CESC inverters incorporate internal RCD (Residual Current Device) to protect against possible electrocution in case of a malfunction of the PV array, cables or inverter (DC). The RCD in the CESC inverter can detect leakage on the DC side. An external RCD is required in some countries. The installer must check which type of RCD is required by the specific local electric codes. Installation of an RCD must always be conducted in accordance with local codes and standards. CESC recommends the use of a Type A RCD with a tripping current of 300mA or higher (Type AC for Jordan).

3.AC terminal wire sequence
Firstly wire back up load and generator side, and secondly wire the on grid side, as shown in Figure 4-10.

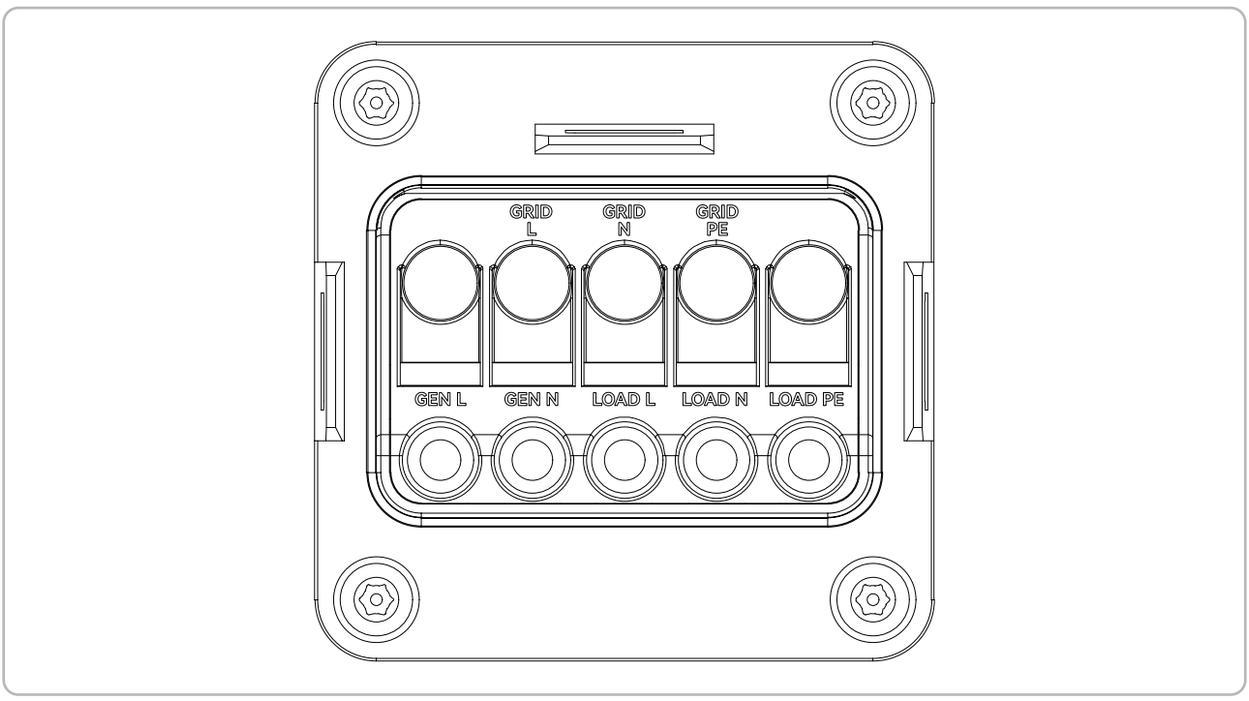

Figure 4-10

4.Recommended AC cable and AC breaker
The recommended AC cable and AC breaker for CESC Saturn 3-8K LVS Pro series single-phase hybrid inverter are as shown in the following table:

Model	Cable specification (Single-core Cable)	Cable specification (Multi-cores Cable)	Outside diameter (mm)	AC Breaker Rated Current (A)
Saturn 3K LVS Pro	GRID: 8AWG (3pcs) LOAD: 8AWG (3pcs) GEN: 8AWG (2pcs)	GRID: 8AWG×3 (1pcs) LOAD: 8AWG×3 (1pcs) GEN: 8AWG×2 (1pcs)	Single-core Cable: GRID&LOAD&-GEN: 4-6.6 Multi-cores Cable: GRID&LOAD: 10-15 GEN: 10-13.5	20A
Saturn 3.6K LVS Pro				25A
Saturn 4K LVS Pro				25A
Saturn 4.6K LVS Pro				32A
Saturn 5K LVS Pro				32A
Saturn 6K LVS Pro				40A
Saturn 7.5K LVS Pro				50A
Saturn 8K LVS Pro				50A

4.4.2 AC connector assembly procedures

1) Select an appropriate AC cable, peel off the jacket of AC cable for 70~80mm(GRID) or 50~60mm (GEN&LOAD), and peel off the insulation sleeve in the conductor core of L/PE/N wires for 13-15mm, as shown in Figure 4-11:

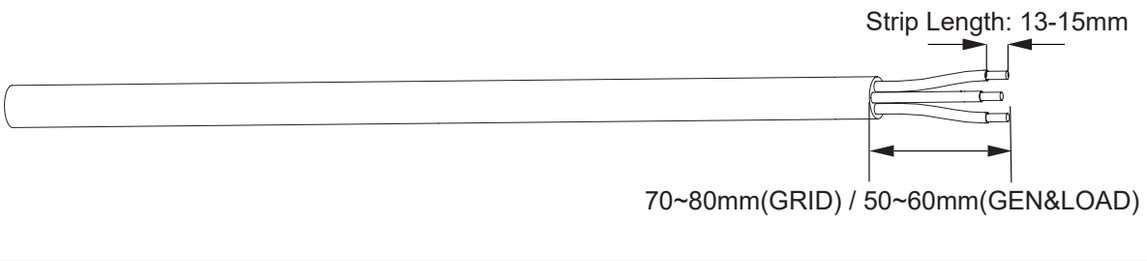

Figure 4-11

2) Insert the stripped cable into the tubular terminal and crimp it securely with a dedicated crimping tool, as shown in Figure 4-12.

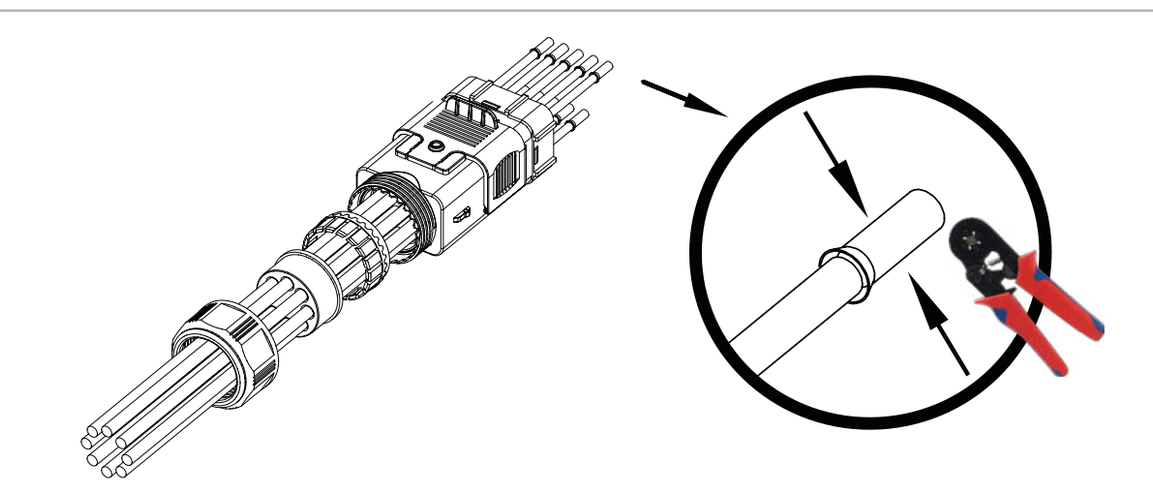

Figure 4-12

3) Loosen the Gland of the waterproof cover, but do not remove the Gland. Pass the AC cables through the Gland, the waterproof ring and the waterproof cover in sequence, as shown in Figure 4-13.

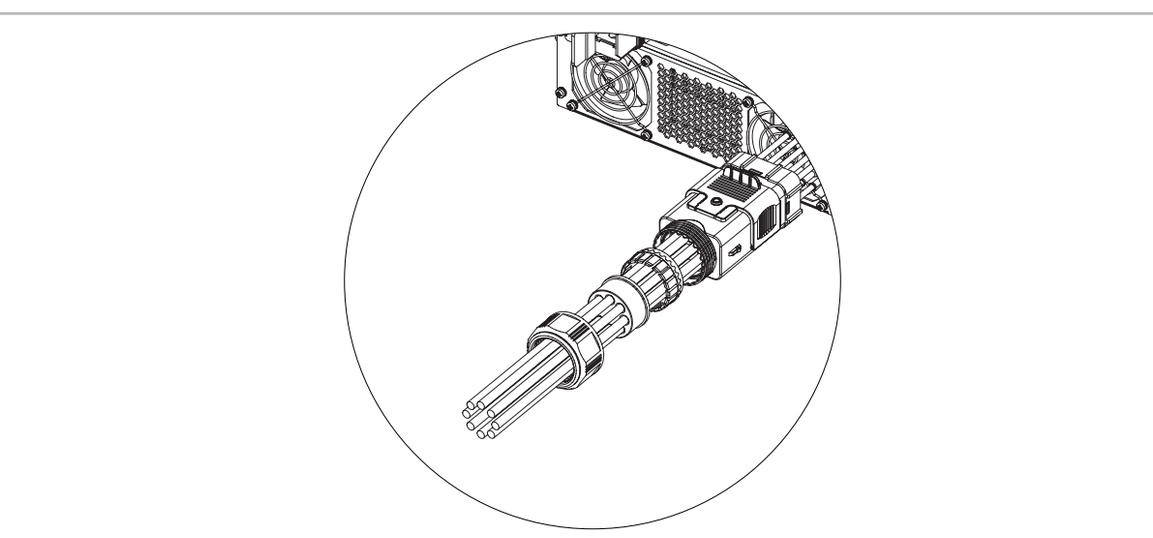

Figure 4-13

4) Connect the prepared tubular terminal to the AC port. After confirming that it is installed properly through the observation hole, tighten the screws with a hexagonal wrench (torque 2~3N·m), as shown in Figure 4-14:

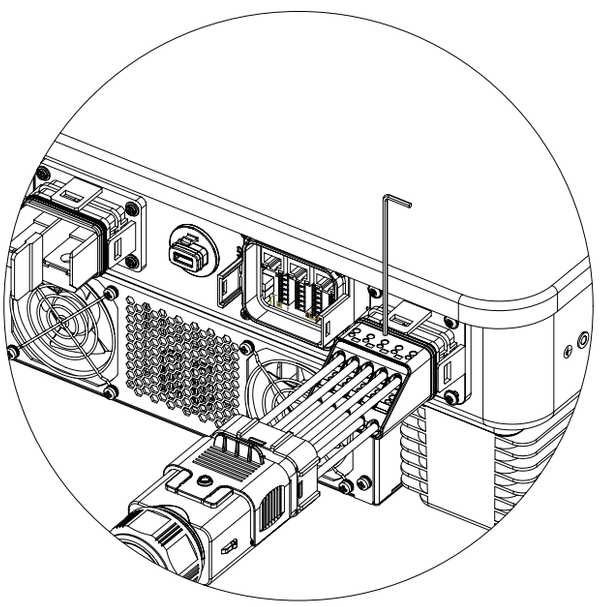

Figure 4-14

⚠ CAUTION

- Please distinguish the on-grid, back-up port and generator port, and don't mix when making the connection.

5) Install the waterproof cover and tighten the Gland (torque 6~7Nm).

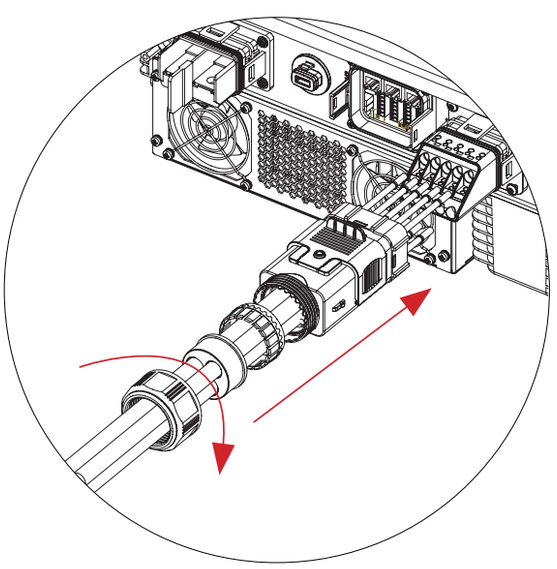

Figure 4-15

Supplementary explanation: Steps to remove the waterproof cover
1) Loosen the Gland of the waterproof cover.
2) Press the elastic metal piece inside the unlock-hole with a screwdriver or similar tool (with a diameter not exceeding 4.5mm), push up the unlock-block (and remove the screwdriver at the same time), and complete the removal of the waterproof cover.

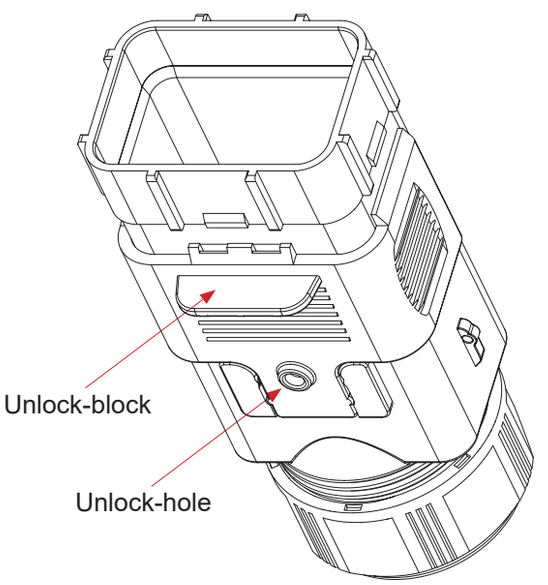

Figure 4-15

4.5 Battery Connection

4.5.1 The following principles must be considered when making battery connection:

1) Disconnect the AC breaker on the grid side.
2) Disconnect the breaker on the battery side.
3) Turn the inverter DC switch to the “OFF” position.
4) The inverter charge and discharge system can be equipped with low voltage lithium or lead-acid. Make sure the maximum input voltage of battery is within the inverter limitation (40V~60V).

4.5.2 Lithium battery connector assembly procedures

1) Select an appropriate battery cable. Suggested cable diameter is listed as bellow:

Model	Cable type	Outside diameter (mm)
Saturn 3-8K LVS Pro	Single-core Cable: 1AWG (2pcs)	12-14

NOTE

- Please notice that the battery cable should be provided by the Battery provider and will not be included in Saturn 3-8K LVS Pro’s packing list, only the OT terminals for the battery port will be provided by CESC. When using lead-acid battery, it is strongly recommended to add an air switch between the inverter and lead-acid battery.

2) Use a wire stripper to strip off the battery cable insulation sleeve for 14-16mm, as shown in Figure 4-17:

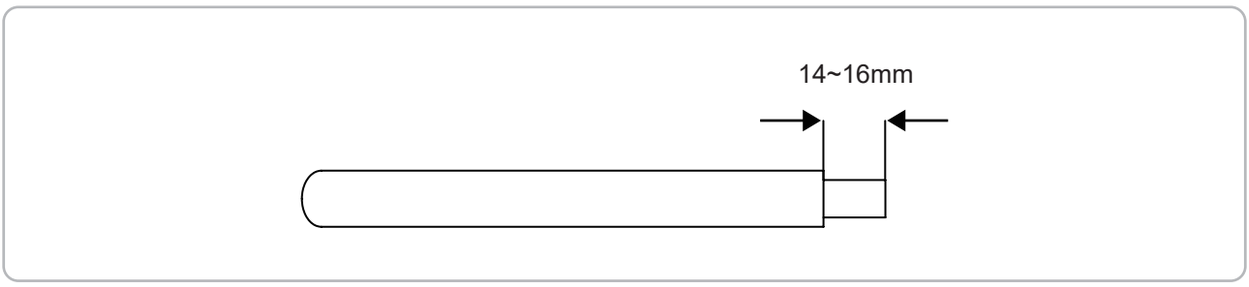

Figure 4-17

3) Press the cables into the OT terminals, tight with some pressure and make sure it is tight.
4) Loosen the Gland of the waterproof cover, but do not remove the Gland. Pass the battery cables through the Gland, the waterproof ring and the waterproof cover in sequence, as shown in Figure 4-18.

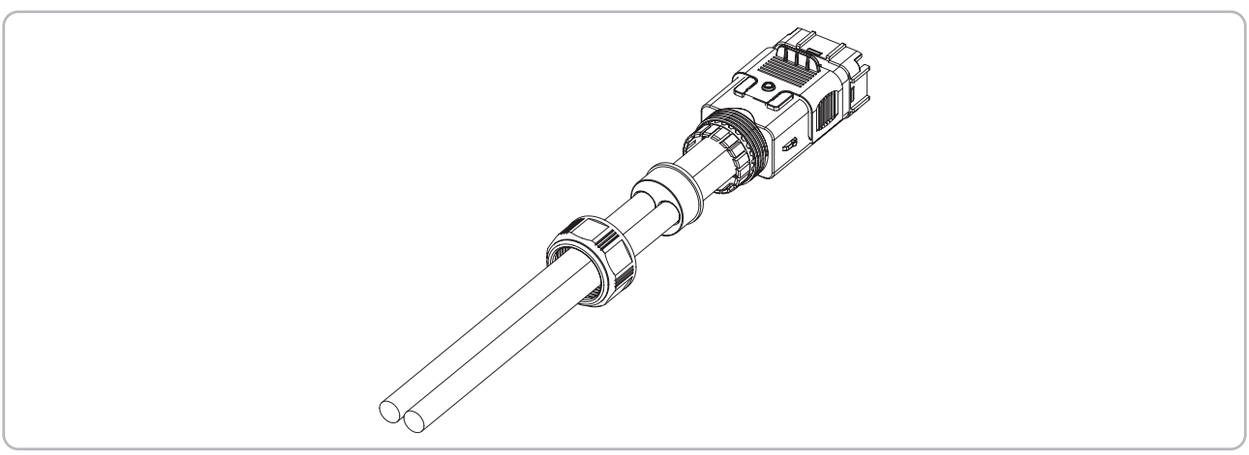

Figure 4-18

5) Connect the prepared OT terminals to the battery port. After confirming that it is installed properly, use a cross-head screwdriver to tighten the OT terminal screws (torque 5~6N·m), as shown in Figure 4-19:

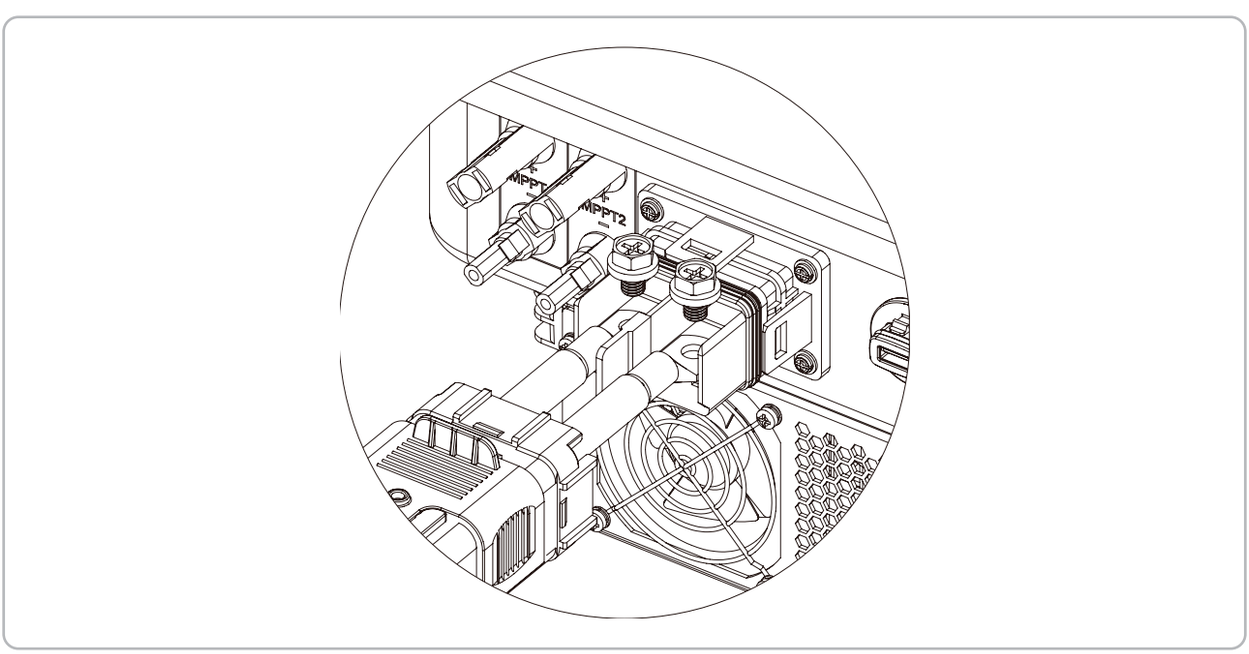

Figure 4-19

6) Install the waterproof cover and tighten the Gland (torque 6~7Nm).

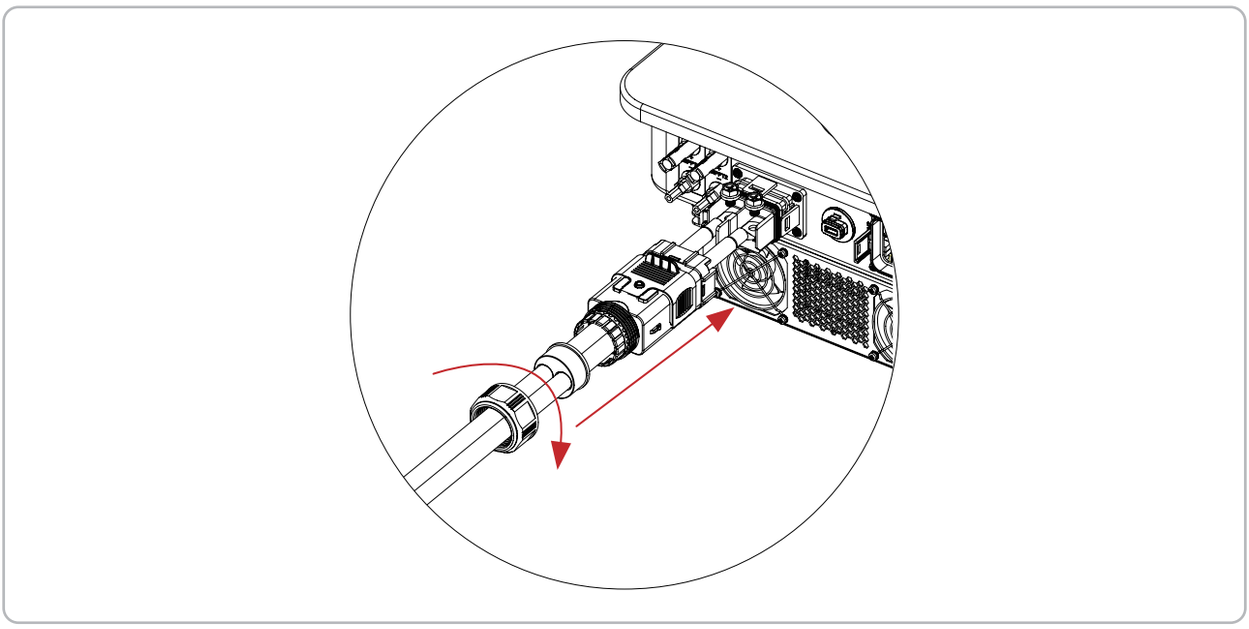

Figure 4-20

4.6 Communication Connection

All communication ports are integrated in the communication block, which you can find in accessory box. It includes CT port, BMS port, EMS port, DRED port, Meter port, EV port. Communication block is delivered with CT and BMS cable for easy installation.
Inverter communication interface and definition as shown below:

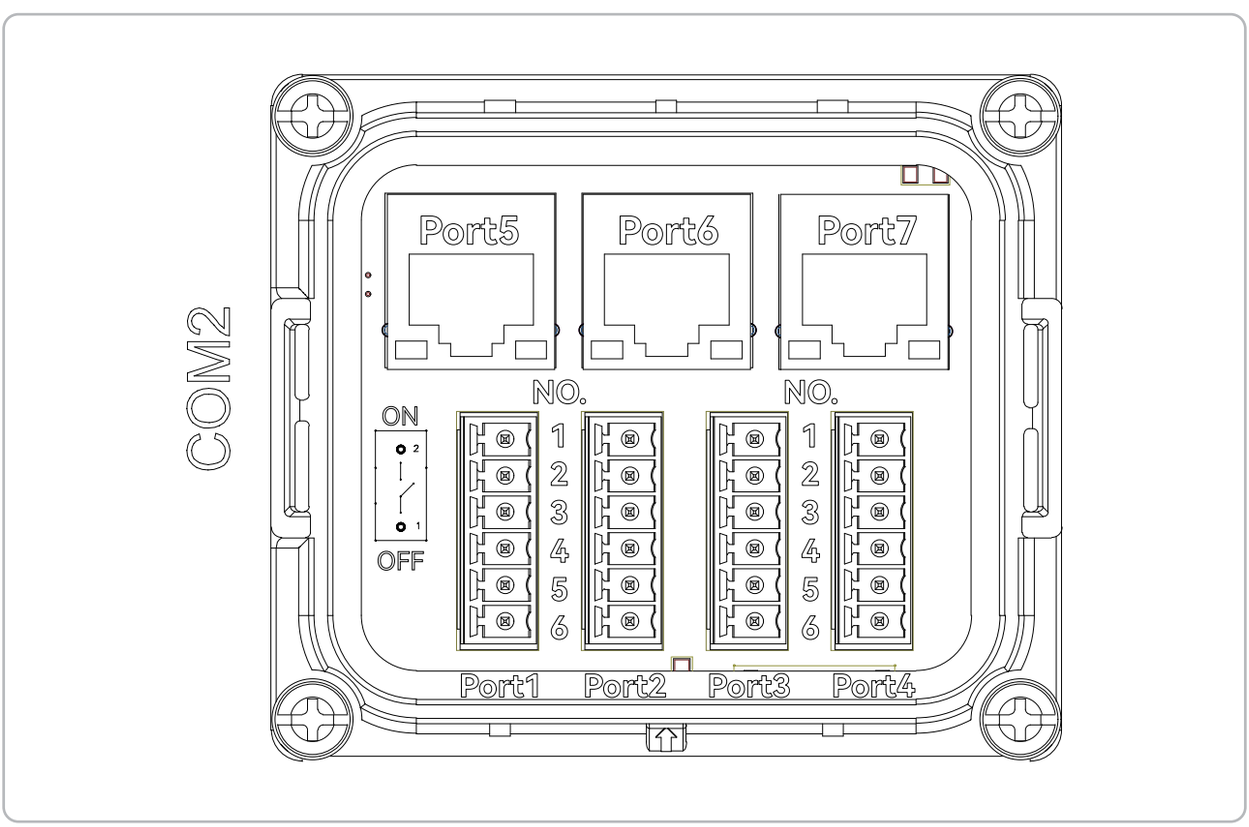

Figure 4-21

Inverter communication interface and definition as shown in table below:

Port	Function	NO.	Definition
Port1 (CN7)	DRED	1	DRM1/5
		2	DRM2/6
		3	DRM3/7
		4	DRM4/8
		5	REFGEN
		6	COM/LOAD
Port2 (CN4)	DI1/D03/CT	1	GND-S
		2	DI1_IN
		3	DO3
		4	DO3-
		5	CT+
		6	CT-
Port3 (CN10)	External communication interface Meter/EV/EMS	1	Meter_485+
		2	Meter_485-
		3	EV_485+
		4	EV_485-
		5	EMS_485+
		6	EMS_485-
Port4 (CN11)	D03/D01	1	DO3+
		2	/
		3	/
		4	DO1-
		5	/
		6	DO1+
Port5 (CN1)	Parallel connection Interface	/	/
Port6 (CN2)	Parallel connection Interface	/	/
Port7 (CN3)	BMS Interface	/	/

Saturn 3-8K LVS Pro series

4.6.1 Assembling the communicate terminal connector

1) Pinch the unlocking pieces on both sides of COM2 and remove the communication cover:

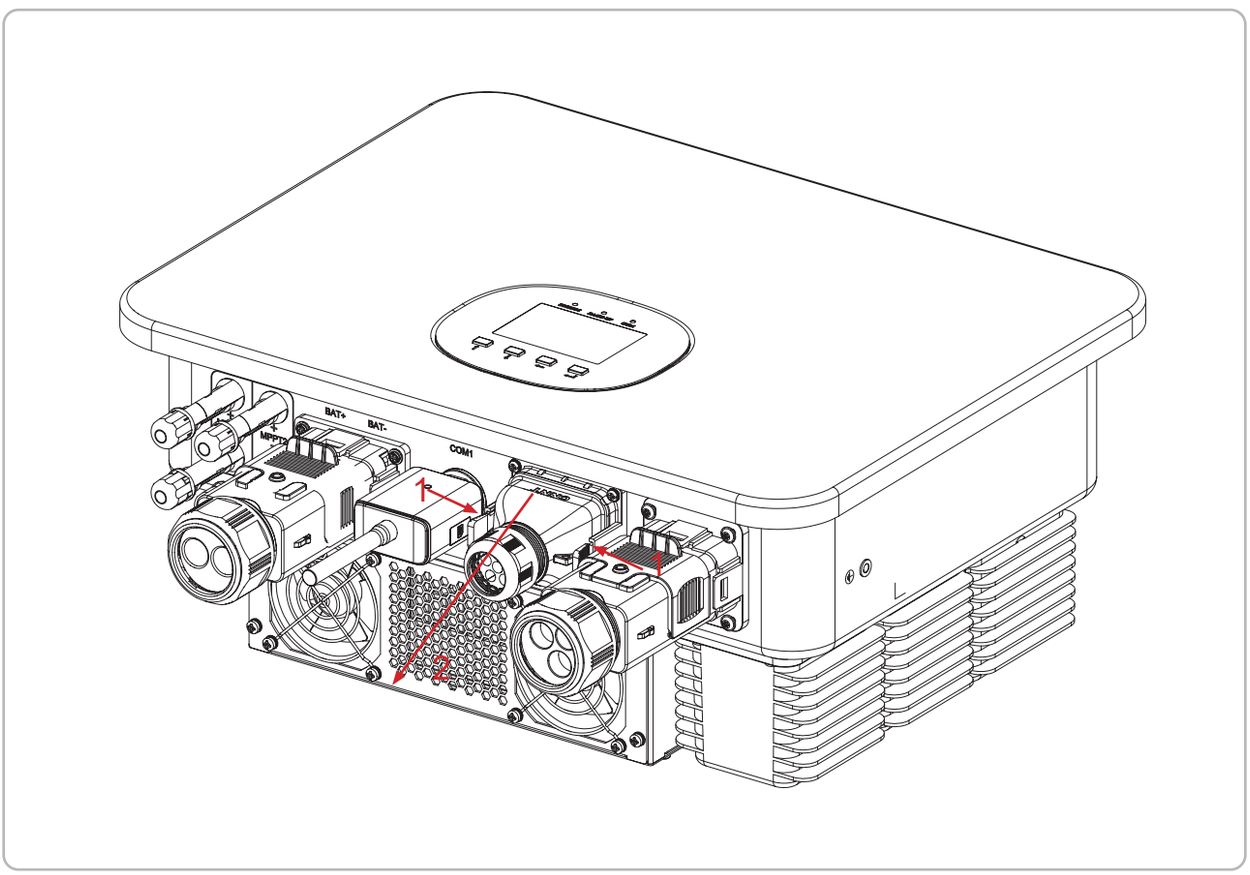

Figure 4-22

2) Remove the Gland and the waterproof ring:

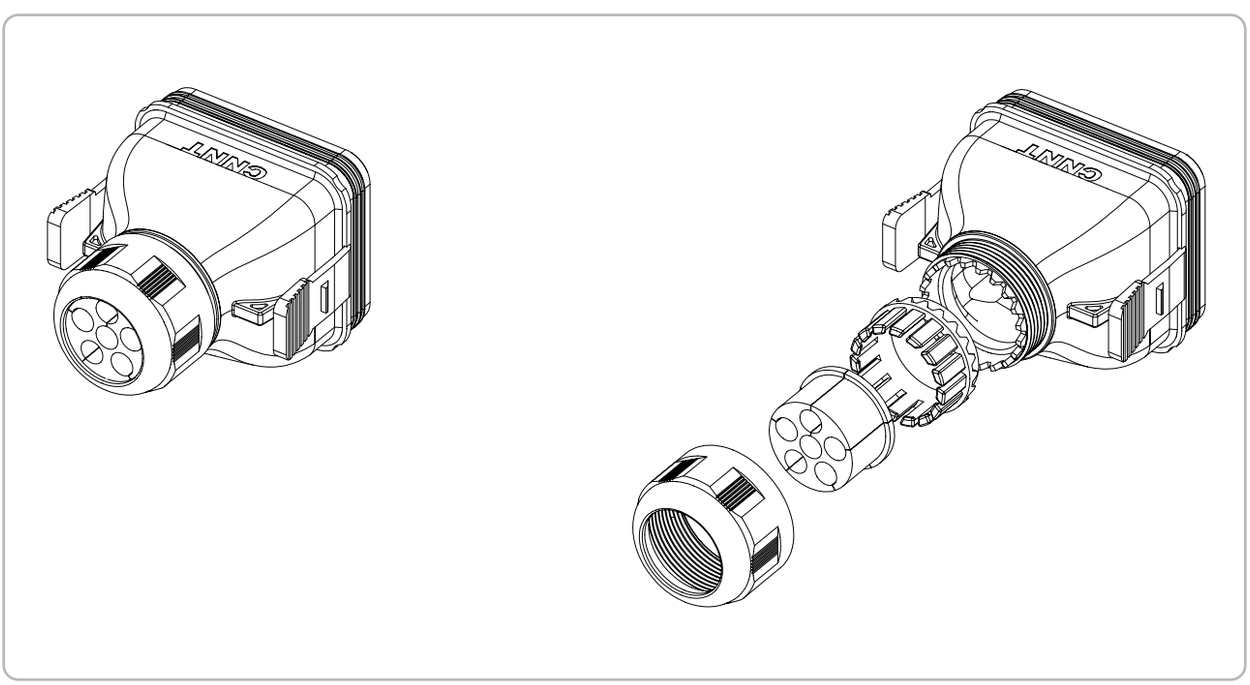

Figure 4-23

3) Pass the communication cables through the Gland and the waterproof ring in sequence, and insert them into the corresponding communication ports.

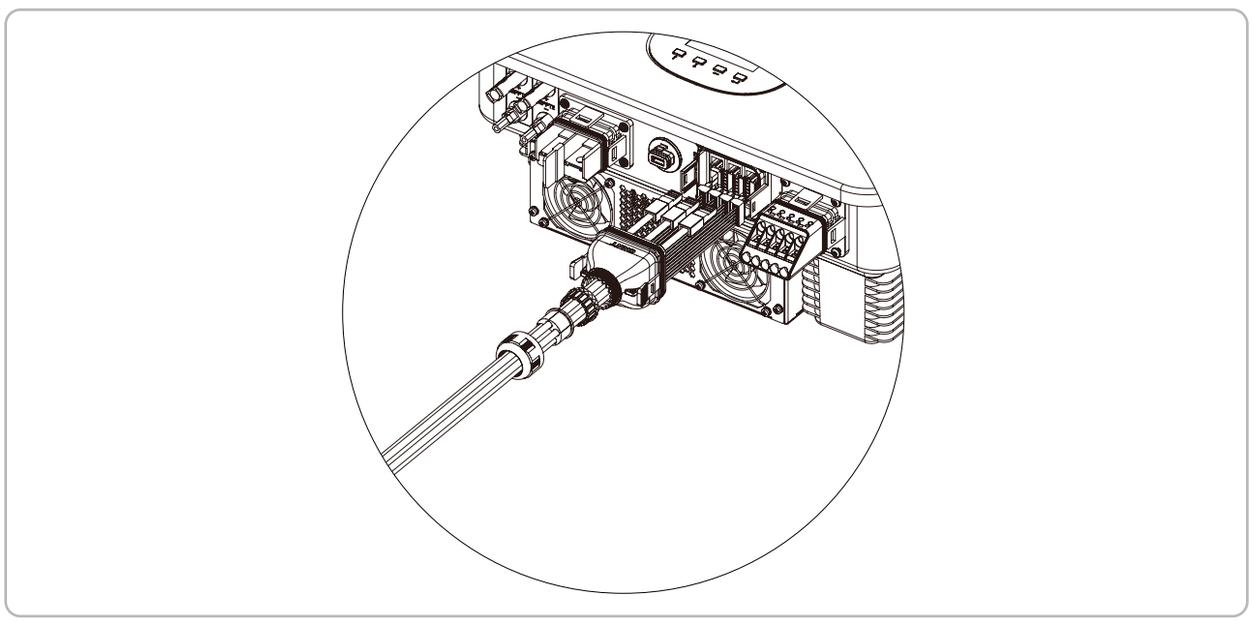

Figure 4-24

ATTENTION

- Never puncture through the gasket eyes not to be used, or there is risk of water inlet.
- Please insert the rubber seal back to holes not used.

4.6.2 Multiple inverters parallel connection

Multiple inverters parallel connection is realized via the Parallel connection cable for the communication block.

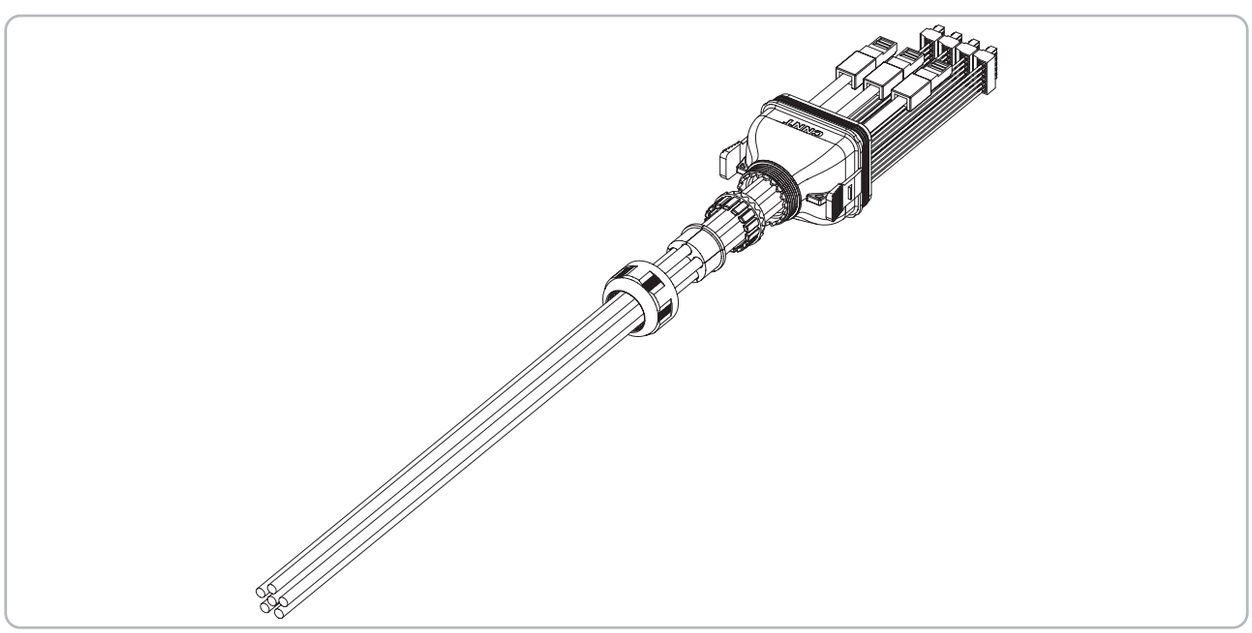

Figure 4-25 T RJ-45 terminals wiring

Saturn 3-8K LVS Pro series

The inverter parallel connecting method is hand-in-hand connection, as shown in Figure 4-26. The Saturn 3-8K LVS Pro inverter can be paralleled up to 3 units for the off-grid configuration.

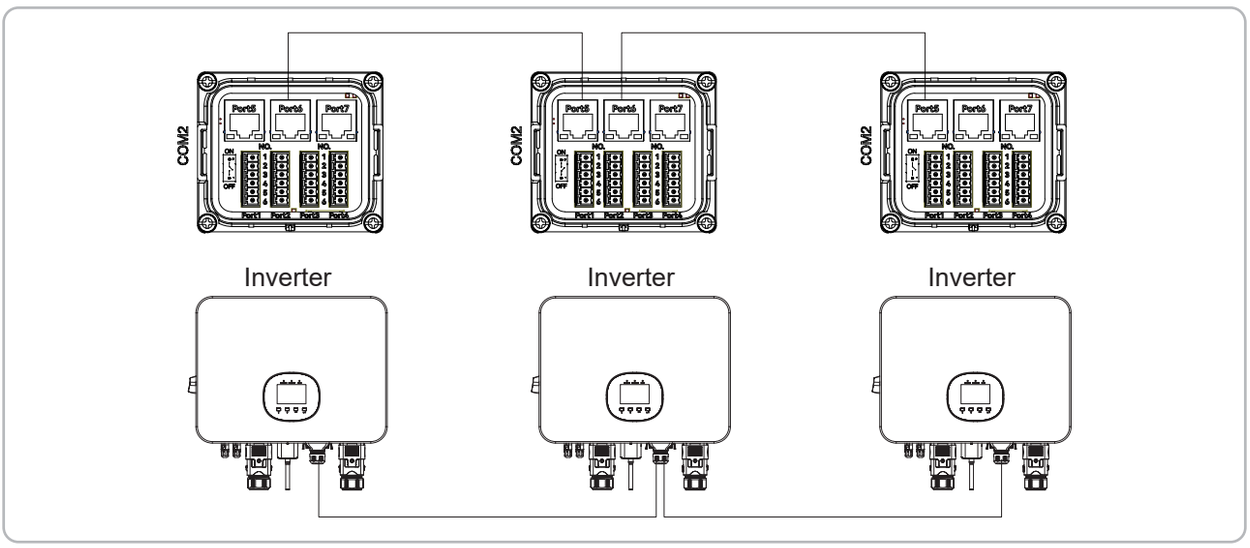

Figure 4-26 Inverter parallel connecting method

① For parallel operation of three inverters: Set the switches of the first and last inverters to ON, and the switch of the second inverter to 1.

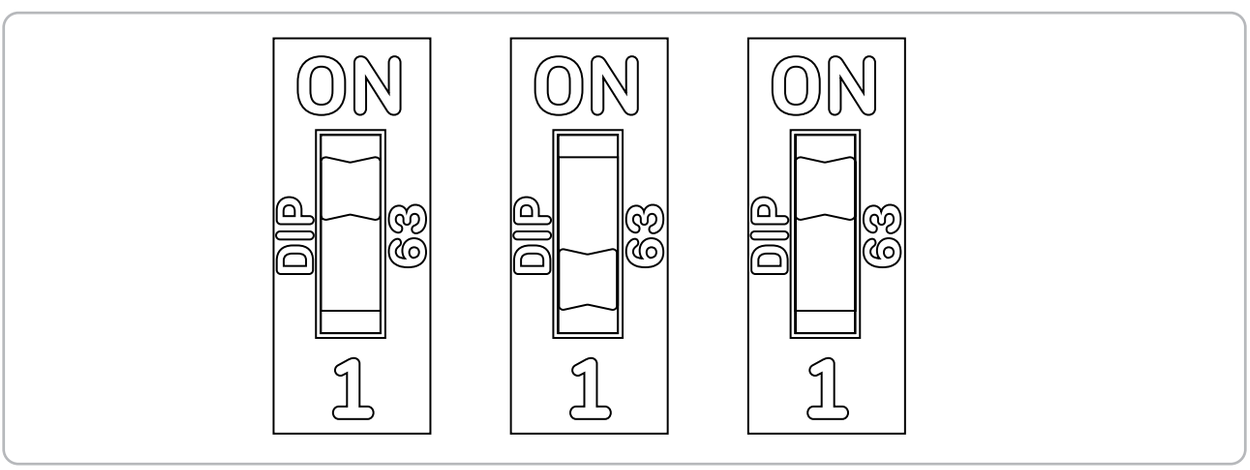

Figure 4-27

② For parallel operation of two inverters: Set both switches to ON.

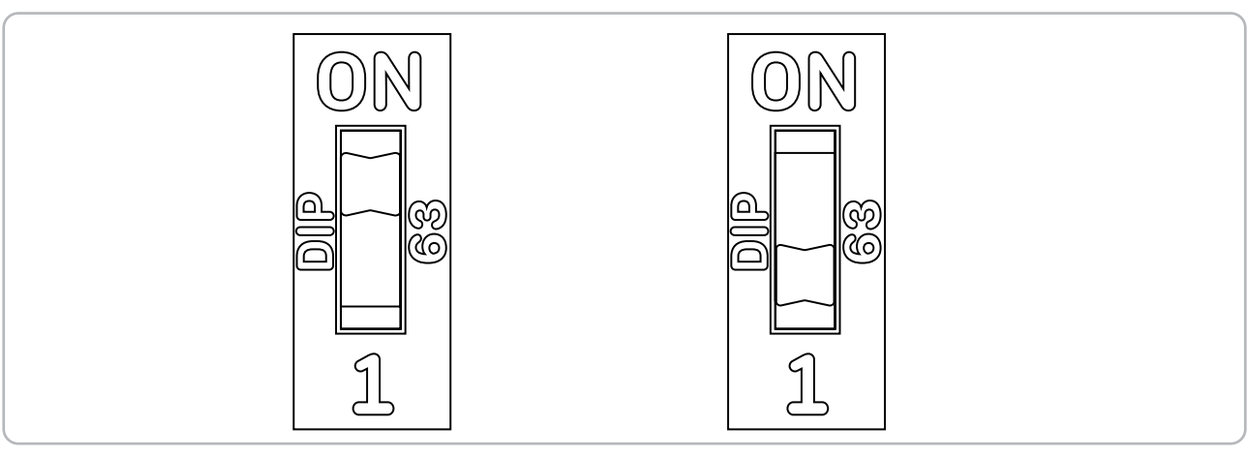

Figure 4-28

NOTE

- For inverters connected in parallel, a master-slave control scheme is implemented. When multiple inverters operate in parallel, the unit communicating with the CT or Meter is automatically designated the master, while the remaining units are assigned as slaves.

4.6.3 CT connection

ATTENTION

- CT installation direction and phase sequence should strictly follow the instruction in the user manual, otherwise, the inverter may not be working normally.

NOTE

- The rated current of CT in the inverter accessory box is 90A, and the maximum allowed inserted cable diameter is 16mm. If the max current through the CT exceeds the rated current or the cable diameter is wider than 16mm, please contact CESC for help.

CT installation:
On the Inverter communication side, CT needs to be connected with the Port 2 NO.5 and NO.6 Terminal in the communication port. Do not reverse the positive and negative poles when wiring.

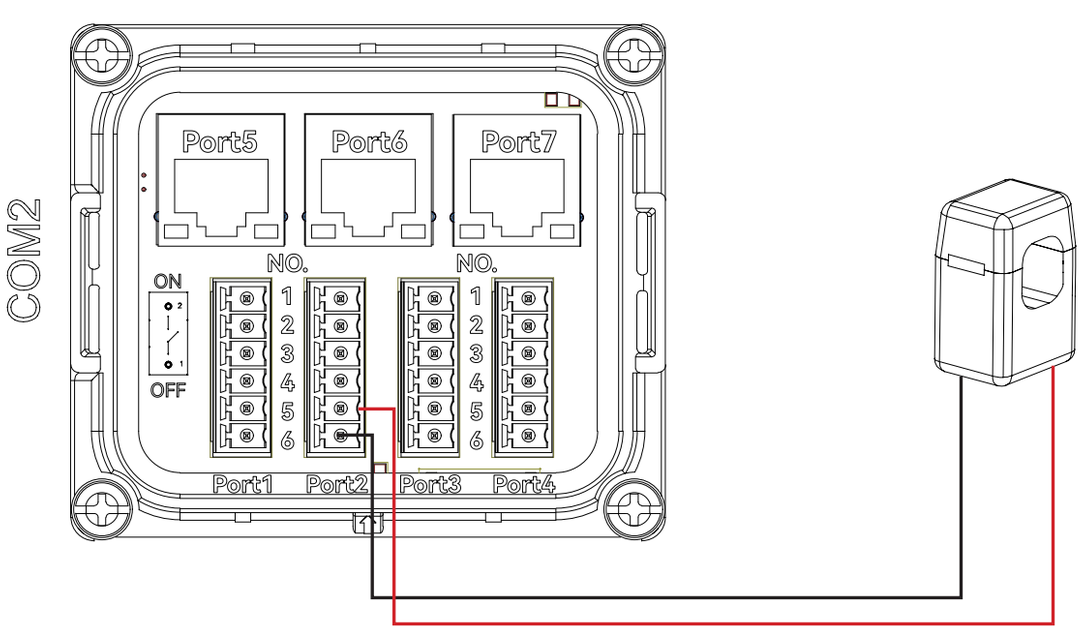

Figure 4-29

Saturn 3-8K LVS Pro series

Port	Function	NO.	Definition
Port2 (CN4)	DI1/DO3/CT	1	GND-S
		2	DI1_IN
		3	DO3
		4	DO3-
		5	CT+
		6	CT-

For the Fire wire side, please install the CT on the Fire wire between the house loads and the power grid, as shown in Figure 4-30.

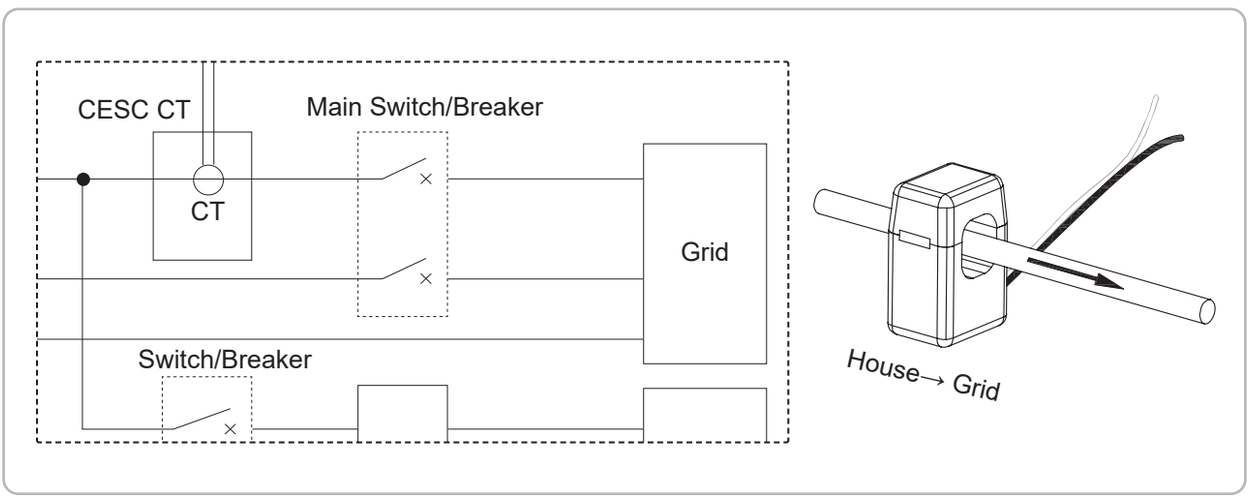

Figure 4-30

NOTE

- The standard CT cable length is 10 meters.
- A meter is required when implementing three-phase export limitation or constructing a microgrid system.

4.6.4 Meter connection (Meter is optional)

Connect the RS485-1A wire from the STM/STK to NO.1 of Port 3 on the inverter, and the RS485-1B wire to NO.2 of Port 3.

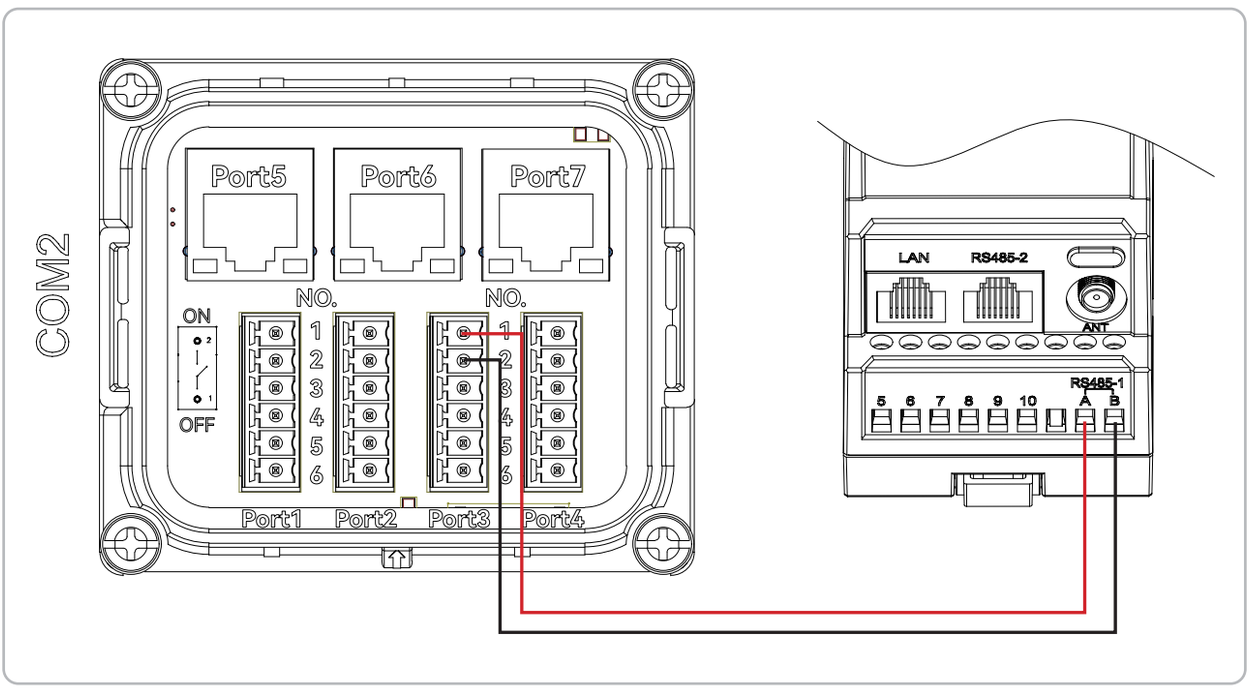

Figure 4-31

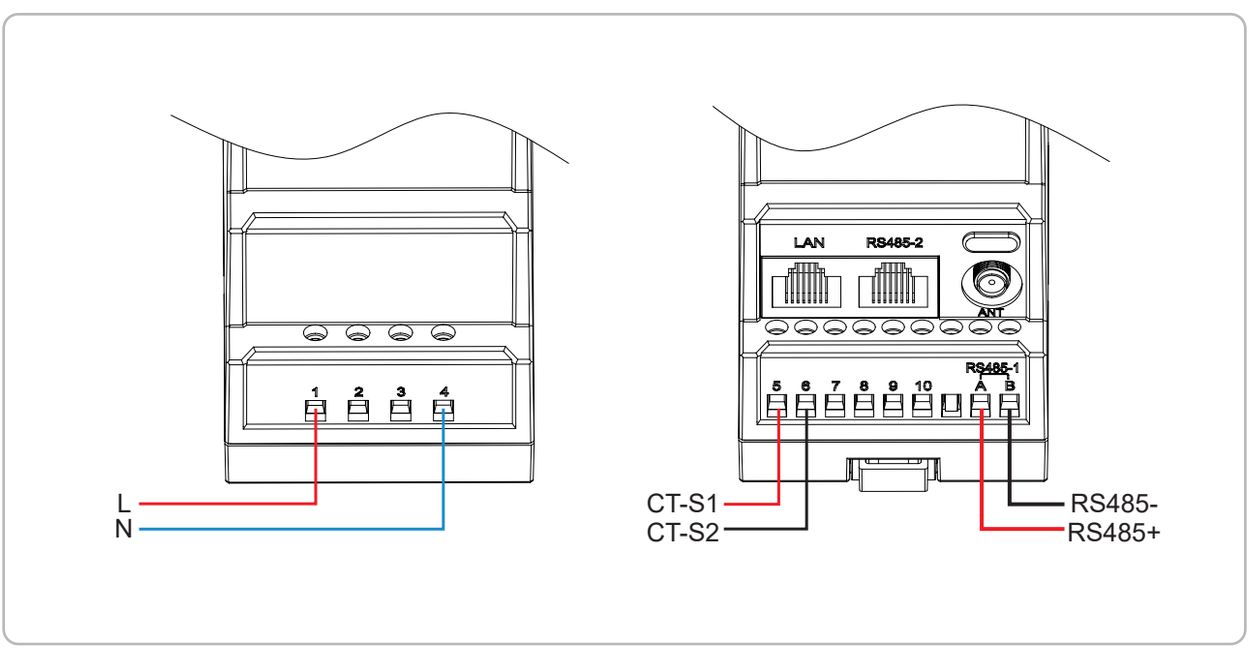

Figure 4-32

4.6.5 Battery BMS communication

Hybrid Inverter Saturn 3-8K LVS Pro is delivered with BMS cable for the communication block. You just need to insert the CAN terminal into the communication port for Battery and Inverter.

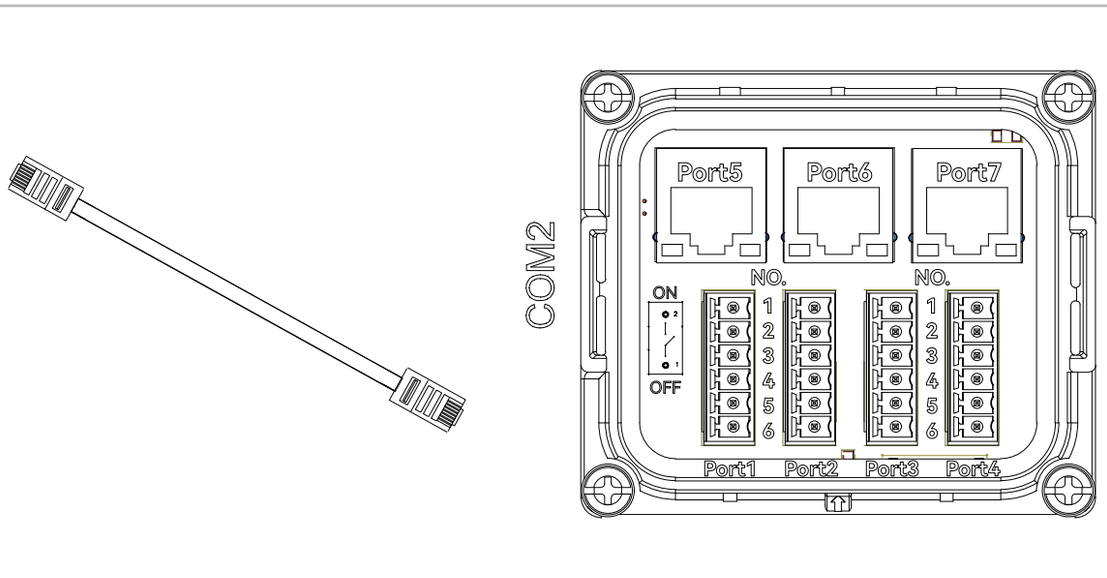

Figure 4-33

Port	Function	NO.	Definition
Port7 (CN3)	BMS Interface	/	/

4.6.6 DRED Communication

DRED interface is special reserved for Australia and New Zealand according to their safety regulation. CESC Saturn 3-8K LVS Pro hybrid inverter is integrated with DRED connection terminals in the communication terminal block.

Communication terminal block DRED definition:

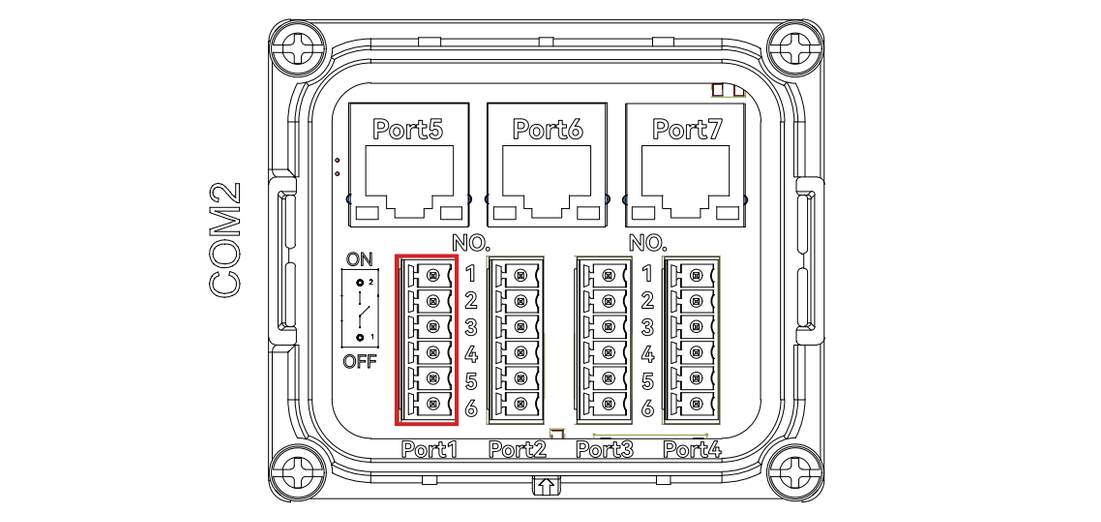

Figure 4-34

Port	Function	NO.	Definition
Port1 (CN7)	DRED	1	DRM1/5
		2	DRM2/6
		3	DRM3/7
		4	DRM4/8
		5	REFGEN
		6	COM/LOAD

CESC Saturn 3-8K LVS Pro inverter supports below DRM mode

Mode	Function
DRM 0	Operate the disconnection device.
DRM 1	Do not consume power.
DRM 2	Do not consume at more than 50% of rated power.
DRM 3	Do not consume at more than 75% of rated power and source reactive power if capable.
DRM 4	Increase power consumption (subject to constraints from other active DRMs).
DRM 5	Do not generate power.
DRM 6	Do not generate at more than 50% of rated power.
DRM 7	Do not generate at more than 75% of rated power and sink reactive power if capable.
DRM 8	Increase power generation (subject to constraints from other active DRMs.
DRM Priority	DRM1 > DRM2 > DRM3 > DRM4 DRM5 > DRM6 > DRM7 > DRM8

NOTE

- CESC doesn’t provide the DRED device for the customer.

4.6.7 DRED Communication

CESC Saturn 3-8K LVS Pro inverter comes standard with one switch to shut off function, and you can use this function by connecting an external switch into the Port 2 NO.1 and Port 2 NO.2 interface in the communication block if it requires in the installation place. The external switch doesn't include in our accessory box.

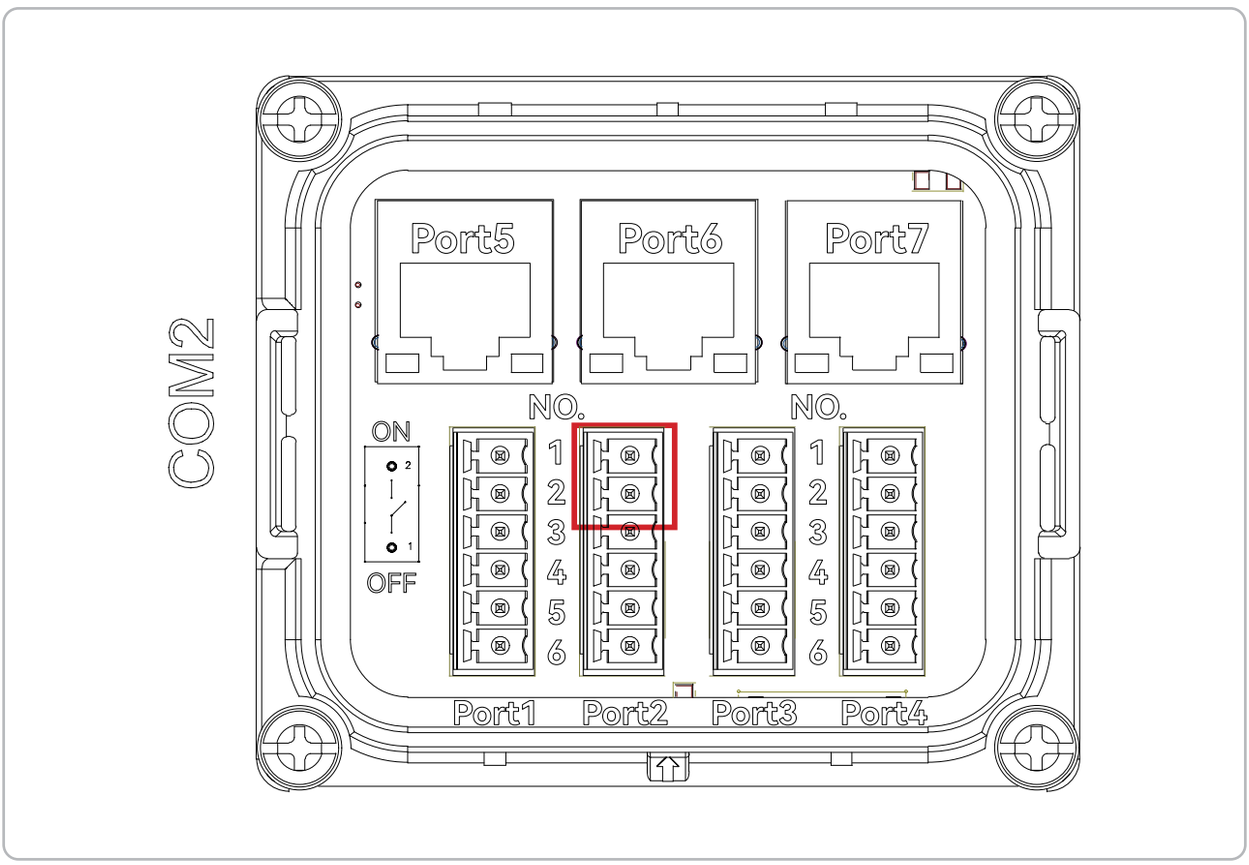

Figure 4-35

Port	Function	NO.	Definition
Port1 (CN4)	DI1/DO3/CT	1	GND-S
		2	DI1_IN
		3	DO3
		4	DO3-
		5	CT+
		6	CT-

4.7 Monitoring Device Installation

CESC Saturn 3-8K LVS Pro series hybrid inverter can be monitored through WiFi, 4G or LAN(Optional), and you can alternatively select according to your preference. Plug the Monitoring module into the Com1 port in the bottom of inverter. A slight “click” sound during the installation represents that the assembly is in place.

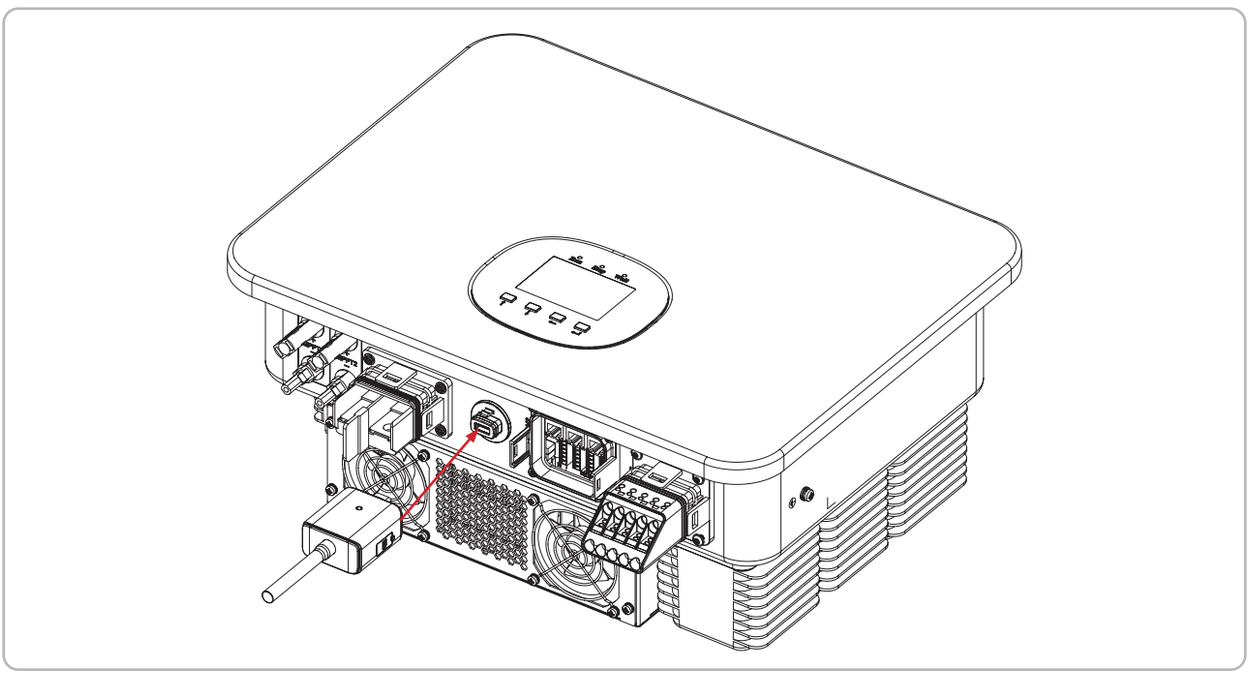

Figure 4-36

4.8 WiFi Module Configuration Guide

4.8.1 DRED Communication

A. Insert the WiFi module into the COM port at the bottom of the inverter and power on the inverter, and the indicator on the module is off now.
B. Prepare a laptop or smartphone and turn on the WLAN connection.
C. Search for the WiFi name“CESC-WiFi********”which released by the module (*represents the last 8 numbers of the inverter SN) and click the WiFi name.
D. WiFi connection succeeded as shown in Figure 4-37.

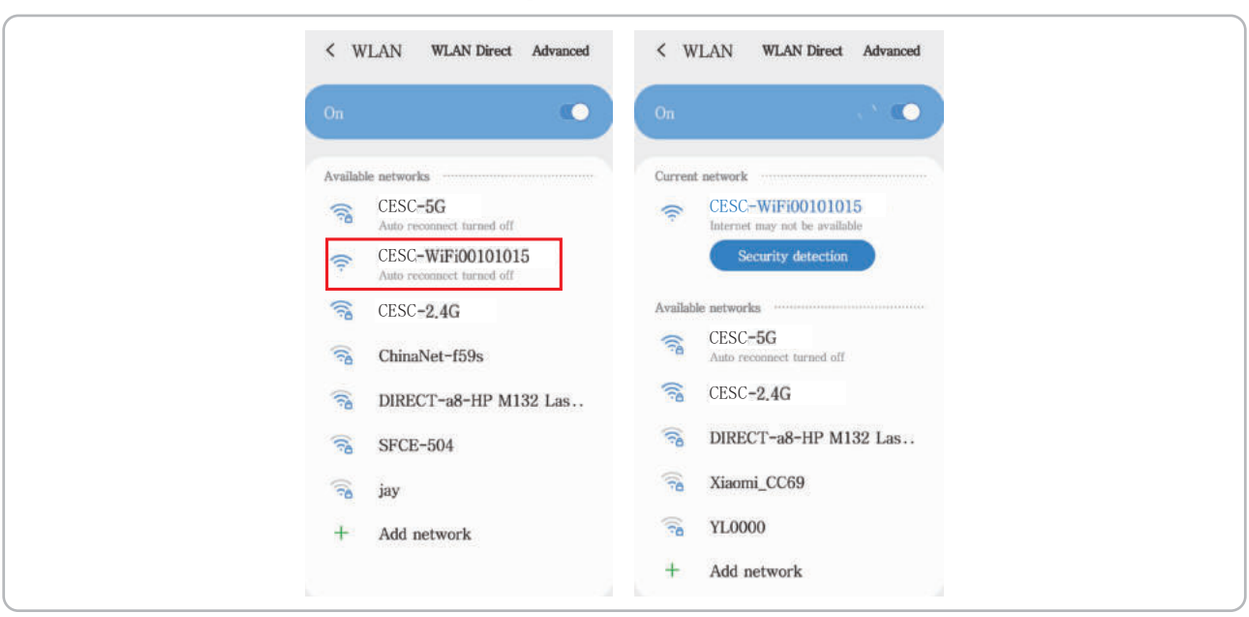

Figure 4-37

2. Open the browser and browse 10.10.100.254, you will see the following picture, input the username and password “admin” and click “Sign in”.

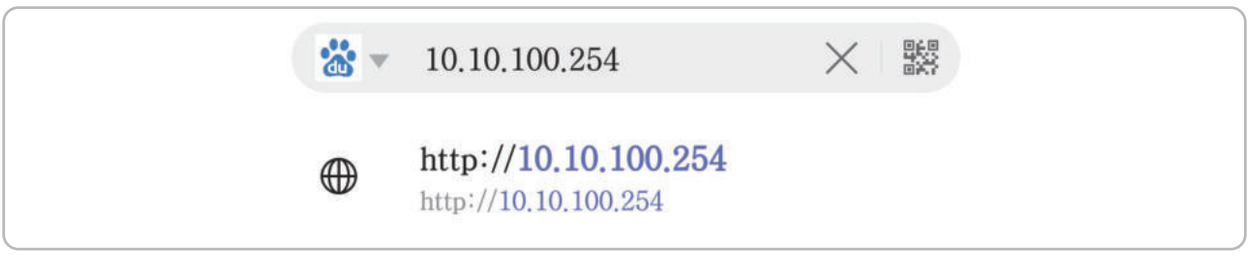

Figure 4-38



Figure 4-39



Figure 4-40

3. You will enter the interface “System”.
Note: Click the“chinese/English” in the upper right corner to switch the interface language.

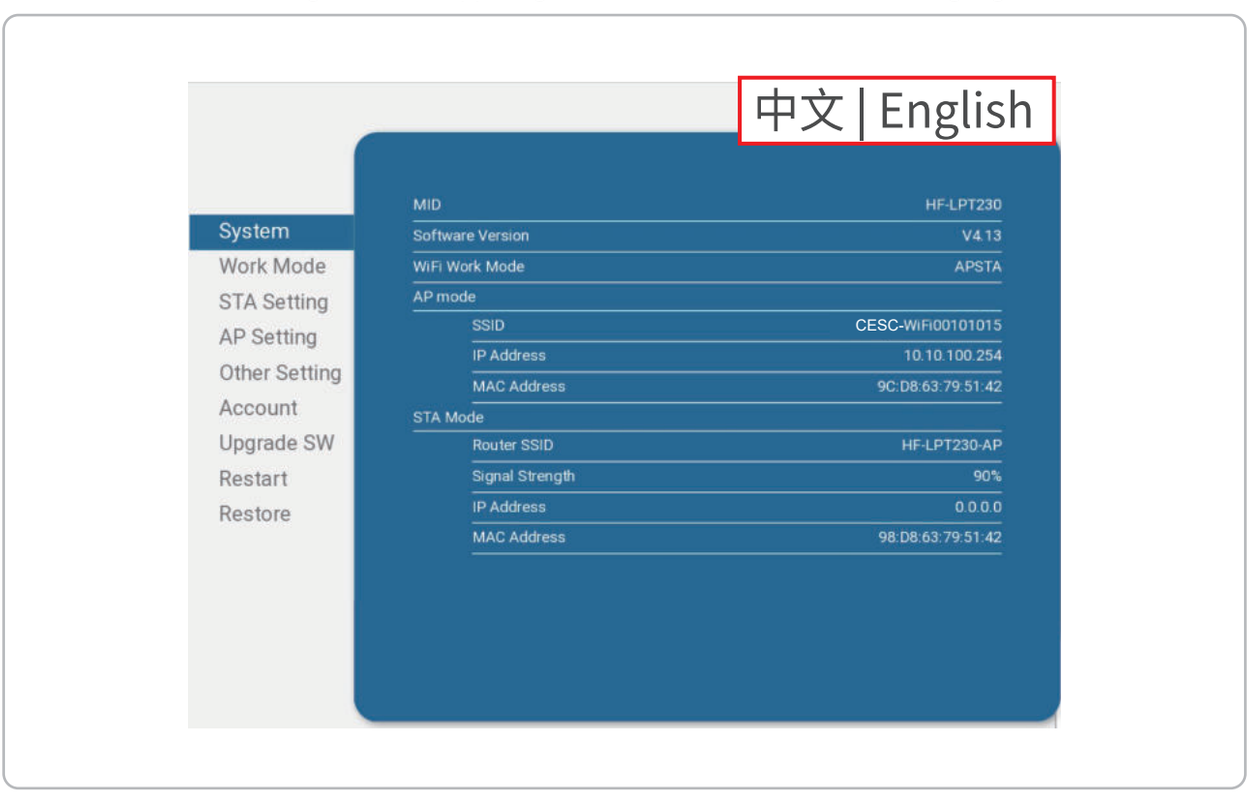

Figure 4-41

4. Please ensure the Work mode is selected to AP+STA mode.

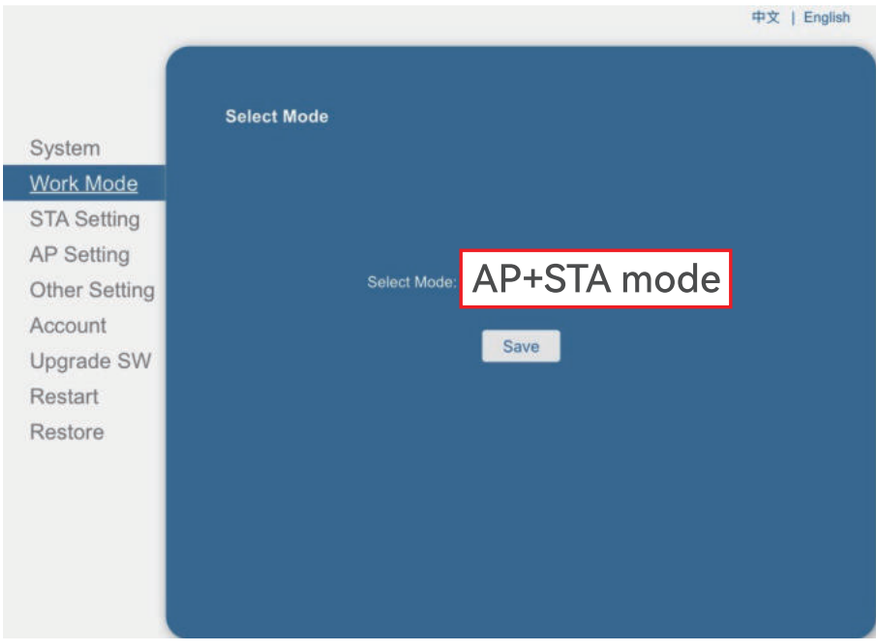

Figure 4-42

5. Click “STA Setting” to enter the WiFi configuration interface, and click“Scan”.
A list of WiFi networks will be displayed.

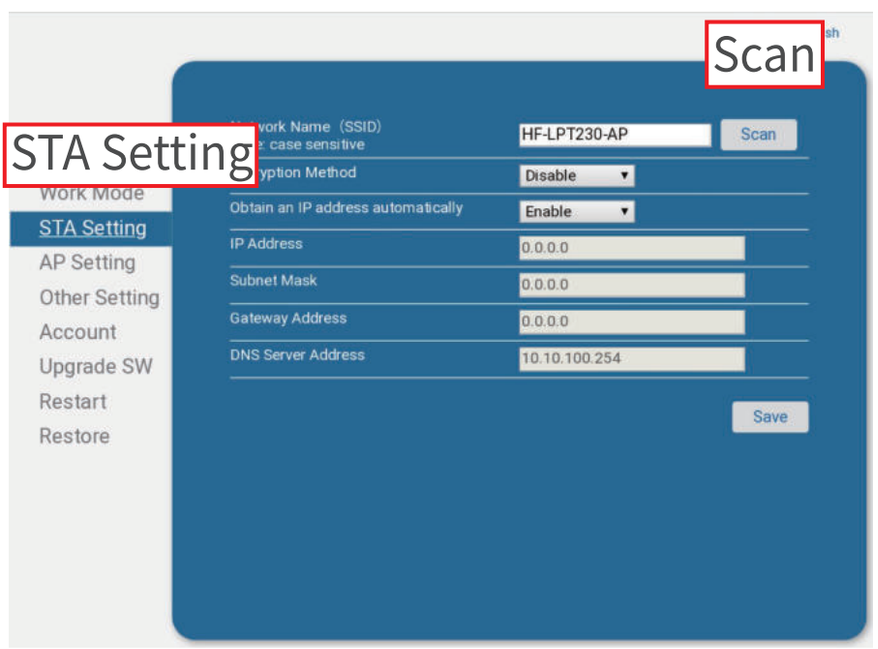

Figure 4-43

Saturn 3-8K LVS Pro series

6. Select the WiFi that you are going to connect and click“OK”.
Note: Only support 2.412GHz-2.484GHz router at present.

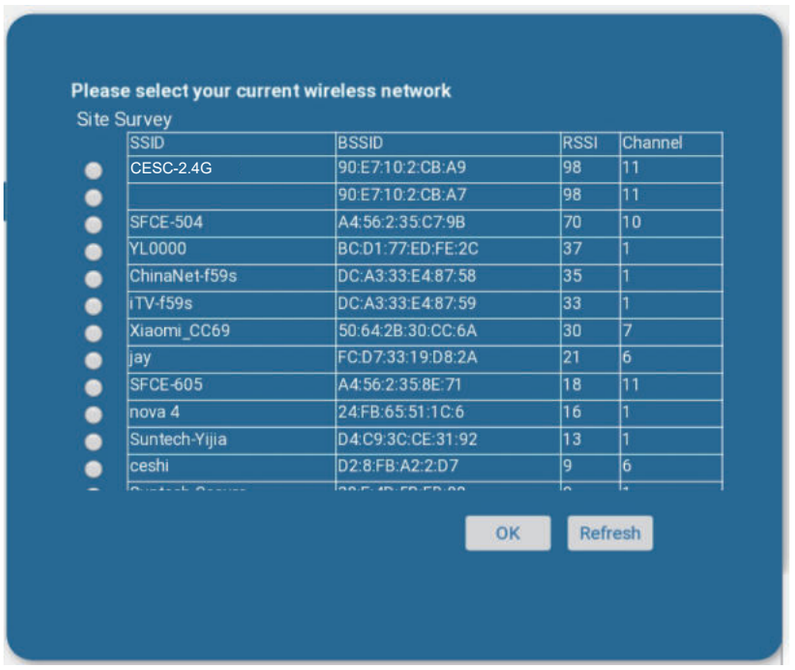

Figure 4-44

7. Now, a notice will pop-up and reminds you to input the WiFi password, click“OK”.

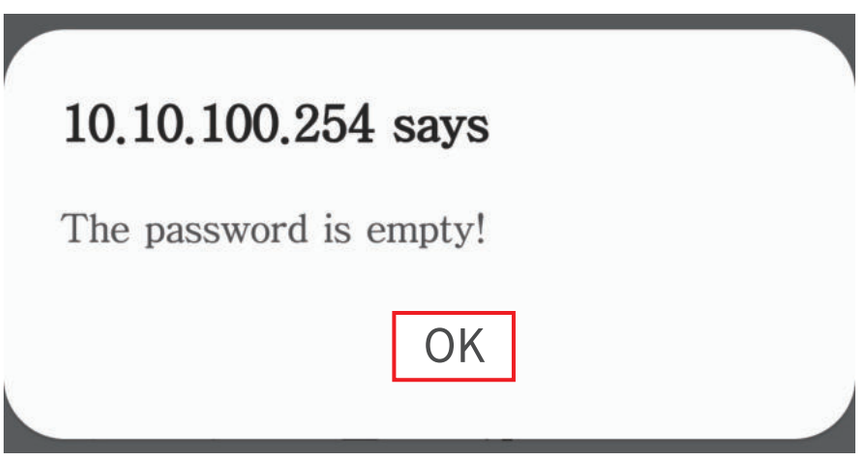

Figure 4-45

8.Input the password in the blank and click “Save”.
Note: Password is case sensitive.



Figure 4-46

9. The system will show“ Saved Successfully !”
click “Restart” to complete the WiFi configuration.

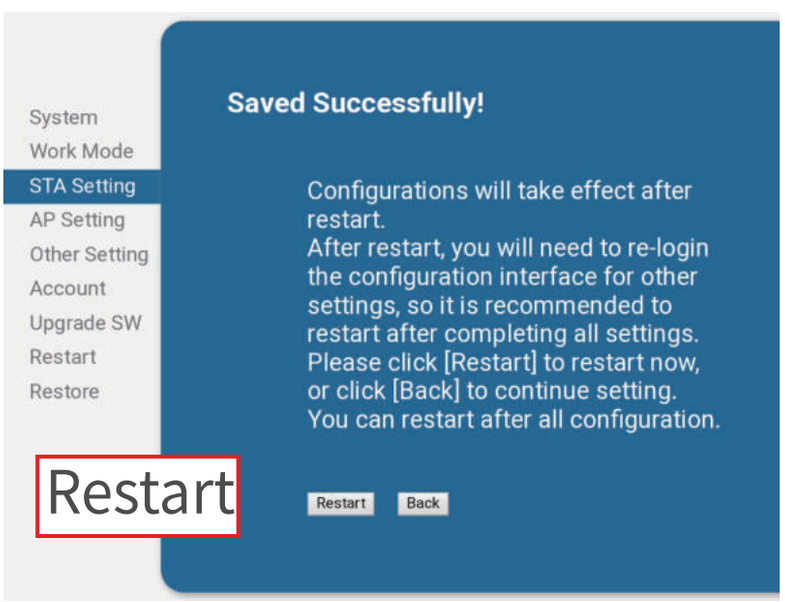

Figure 4-47

10. After the configuration succeeded, the indicator on the WiFi module will be always on.OK".

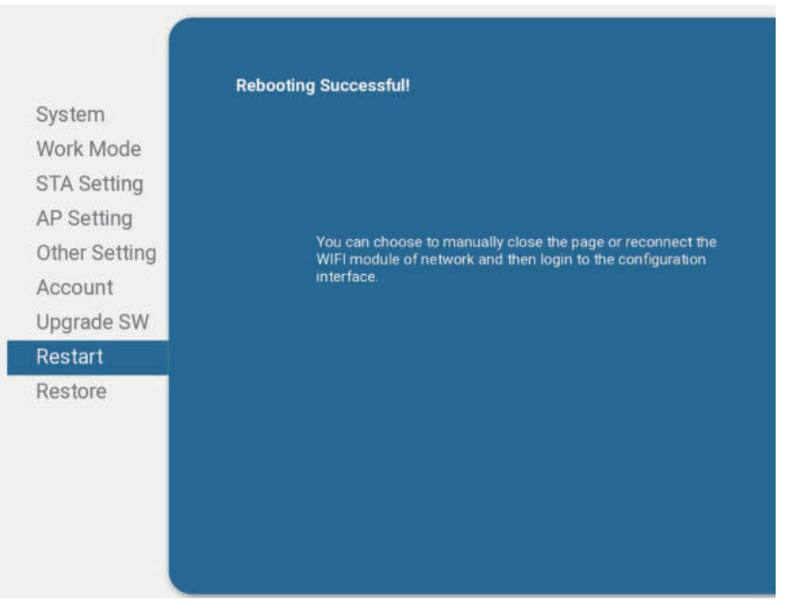

Figure 4-48

4.8.2 CESC setup APP download method

CESC Setup APP is a mobile application that communicates with hybrid inverters over Bluetooth and allows you to monitor real-time status and configure parameters.
Scan the QR code to download and install the app.

05 Equipment Commission and Stop

5.1 Equipment Commission Requirements

5.1.1 Verification before power on

No.	Check Items	Acceptance Criteria
1	Hybrid inverter	The product is installed correctly and securely.
2	Installation environment	The product is firmly installed at a clean place that is well-ventilated and easy-to operate.
3	Grounding	The PE cable is connected correctly, securely, and reliably.
4	Switch	The DC switch and all the switches connecting to the hybrid inverters are OFF.
5	Cable connection	The PE, DC input, AC output, and communication cables are connected correctly and securely.
6	Cable ties	Cable ties are intact, routed properly and evenly
7	Unused terminal and port	Unused cable holes are fitted using the waterproof nuts. The electrical conduit holes are sealed.
8	Grid requirements	The voltage and frequency at the connection point meet the inverter grid connection requirements.

5.1.2 Start Inverter

When starting the inverter, follow these steps:
1) Turn on the AC breaker (close the AC circuit breaker).
2) Select the battery type (lithium or lead-acid) for the inverter and turn on the battery switch.
3) Turn the DC switch in the inverter bottom to the “ON” position.
4) The inverter will start to check the DC and AC input parameters and self-check, and if everything is normal, the inverter will start to work according to the work mode which you set on the App. The inverter display and indicators will show relative parameters and status.

5.2 Stop Inverter

When turning off the inverter, please follow the steps below:
1) Shut off the inverter through the APP or the button on the display first.
2) Disconnect the breakers on the grid and load side.
3) Turn off the battery switch, and disconnect the DC breaker on the battery side (if any).
4) Wait 30 seconds and then turn the inverter DC switch to the “OFF” position. At this time, there is remaining power in the inverter capacitor. Wait for 5 minutes until the inverter is completely de-energized before operating.
5) Disconnect the AC and DC cables.

Saturn 3-8K LVS Pro series

06 General Operation

6.1 Display Panel

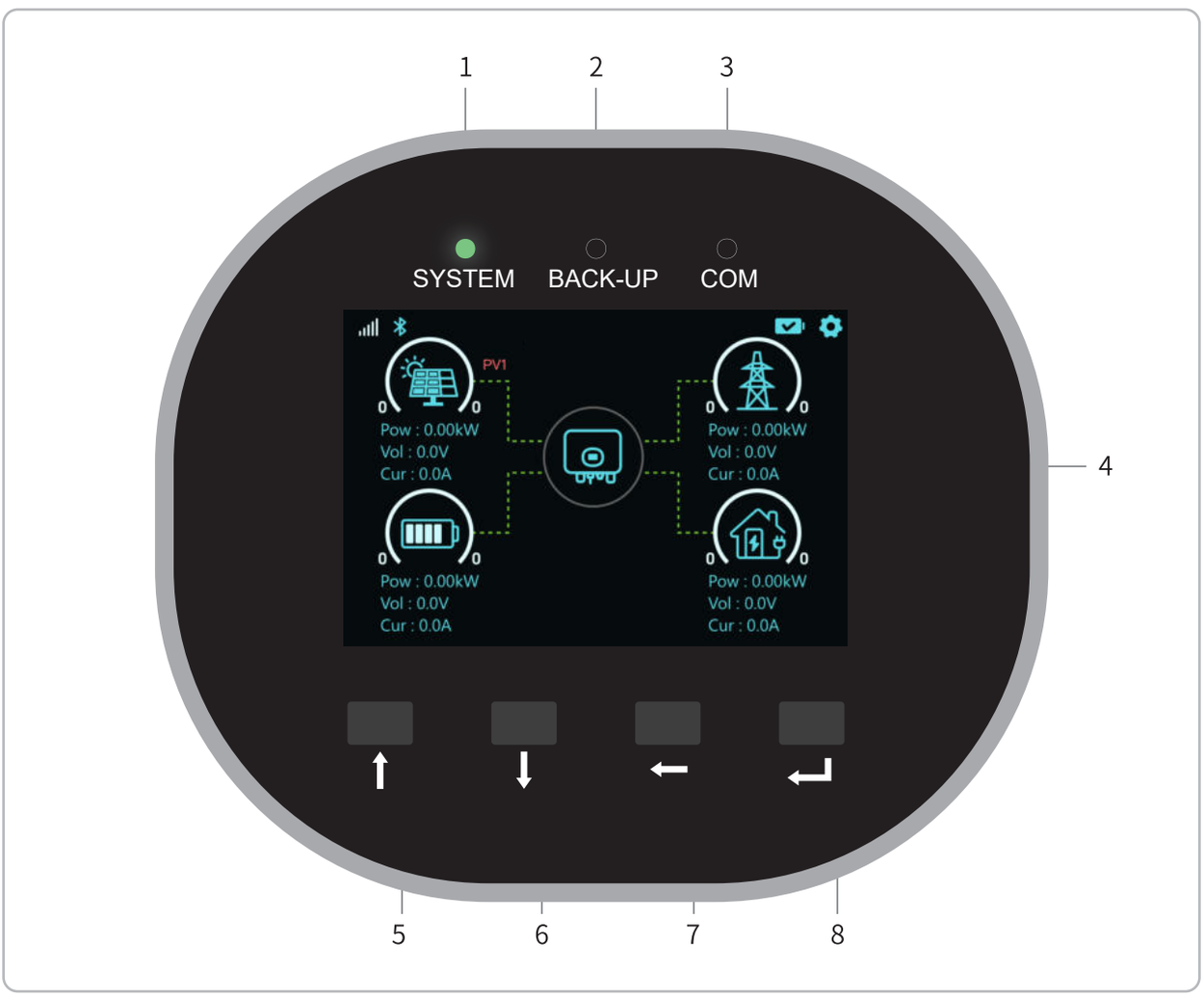

No.	Name	Definition
1	SYSTEM	Solid Yellow: Inverter powered on and in standby mode Flashing Green: Inverter under self-test status Solid Green: Normal operation - grid-connected generation or off-grid mode Flashing Red: BACK-UP output overload Solid Red: System fault OFF: Inverter powered down
2	BACK-UP	Solid Yellow: Grid abnormality; BACK-UP port supplying power Solid Green: Grid normal; BACK-UP port supplying power OFF: No power output from BACK-UP port
3	COM	Flashing Yellow: Monitoring module resetting Solid Yellow: Connection failure (inverter ↔ communication module) Flashing Green: Communication failure (communication module ↔ cloud server) Solid Green: Monitoring system normal OFF: Monitoring module inactive

When all three indicators are on, it indicates that the inverter is in the process of upgrading.		
4	LCD Screen	Display the information of the inverter. (The display will turn off after 5 minutes of inactivity to save power; press any button to wake it up.)
5	Function Button	Up button: Move the cursor up; turn the page left; increase the value.
6		Down button: Move the cursor down; turn the page right; decrease the value.
7		ESC button: Return from current interface or function.
8		OK button: Confirm the selection.

6.2 LCD Screen Icons

Below screen shows the overall information of the inverter.

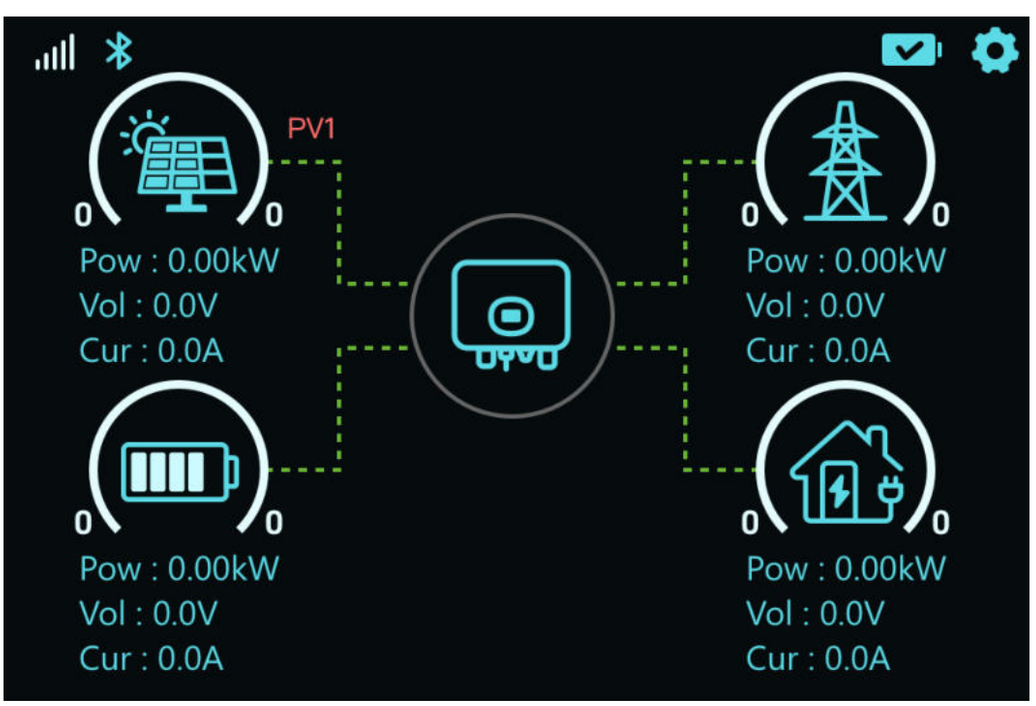

1. Icon Definitions

1) The icon in the top left corner represents the power of the PV modules. The screen automatically switches between the power under each MPPT. The top right corner of this icon indicates from which MPPT the current power is being derived. The semicircle above this icon displays the current power generation of that MPPT relative to the inverter rated power. Enter this icon to view detailed PV data.

Saturn 3-8K LVS Pro series

2) The icon in the top right corner represents grid power. The semicircle above this icon shows the current power delivered to the grid by the inverter relative to the inverter rated power. Enter this icon to view detailed grid data.

3) The icon in the bottom left corner represents the charging and discharging power of the battery. Each square in the battery chart represents 25% of the SOC, and the icon displays based on the actual SOC of the battery. Enter this icon to view detailed battery data.

4) The icon in the bottom right corner represents the power consumption of household loads. The semicircle above this icon shows the current power consumption of household loads relative to the inverter rated power. Enter this icon to view detailed load data.

5) The icon in the center can be clicked to enter, allowing the user to view the currently selected safety code, run status, and working mode.

6) The signal strength indicator is located in the upper left corner. If connected to a WiFi module, it displays 【】; if connected to a 4G module, it displays 【】.

7) Located in the upper right corner, to the left of the Settings icon, is the battery connection status indicator. If the battery is properly connected, it displays 【】; if no battery is connected, it displays 【】.

8) If the device is undergoing a software upgrade, the inverter screen will display “ARM/DSP Upgrading...”.

2. The main screen displays the direction and value of energy flow between PV, grid, battery, and load. The direction of energy flow is indicated by green arrows, and the values of energy are displayed below the corresponding icons.

- PV power is always positive.
- A positive grid power indicates that the inverter is supplying power to the grid, while a negative value indicates taking power from the grid.
- Negative battery power indicates charging, while positive indicates discharging.

6.2.1 Main screen flow chart

Please refer to the following display operation flow for details:



Saturn 3-8K LVS Pro series

6.2.2 Main screen flow chart

NOTE

- After every setting completed, wait for 10 seconds and the inverter will automatically save your settings or modifications.

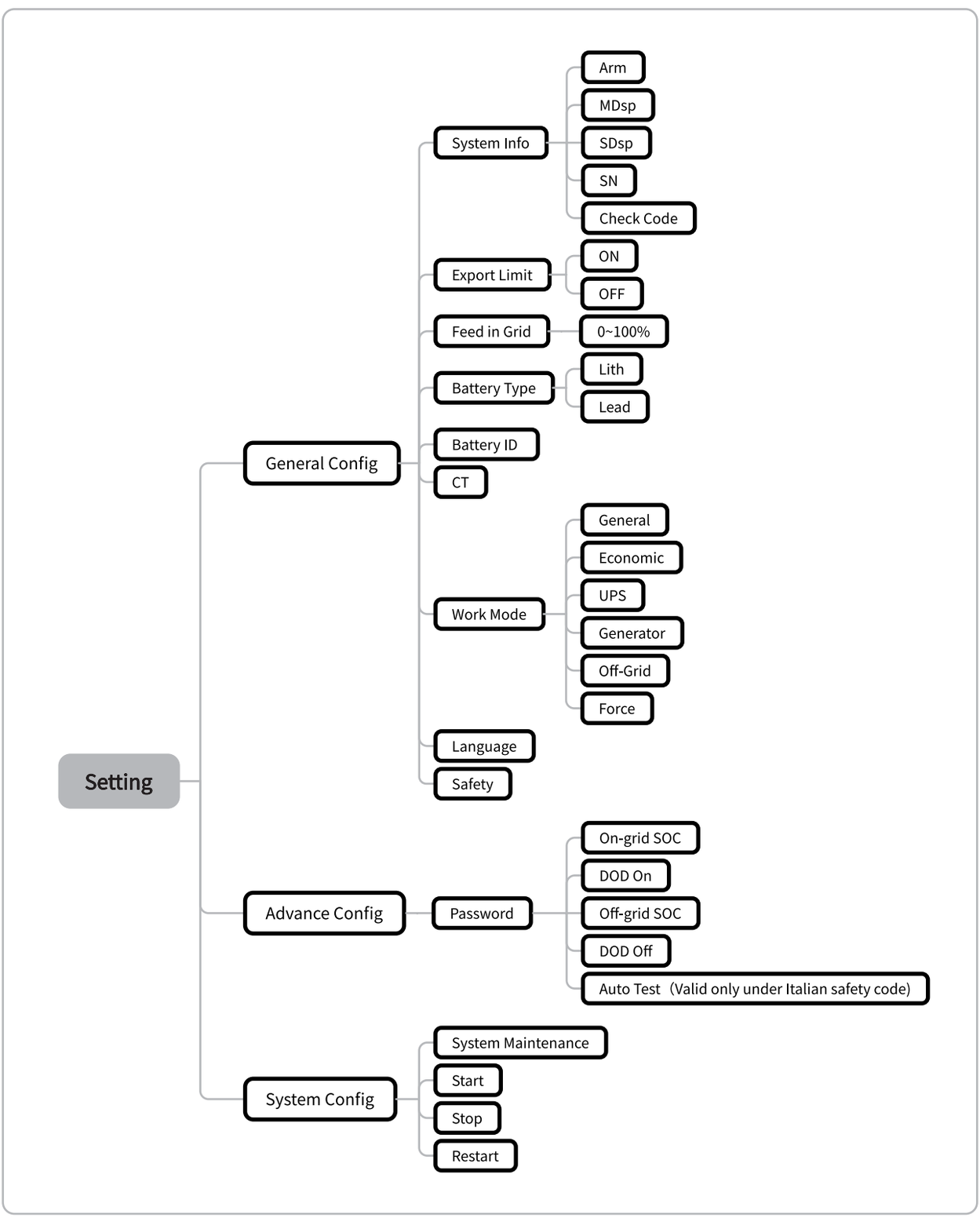

Inverter Display Abbreviation and Complete Name Reference Table

Abbreviation	Complete Name
Work Mode	Current Work Mode / Work Mode Setting
OnGrid SocProt.	OnGrid Bettery Soc Protection
OnGrid DOD	OnGrid Discharge of Depth
OffGrid SocProt.	OffGrid Soc Protecttion
OffGrid DOD	OffGrid Discharge of Depth
OffGrid Volt	OffGrid Voltage Setting
OffGrid Freq	OffGrid Frequency Setting
Unbalan. Output	OnGrid 3-Phase Unbalanced Output Switch
On-Off Grid SW	Off-grid Function SW (Inverter will automatically switch to off-grid mode to ensure the back-up side power supply when the gird is abnormal or off)
Relax OffGrid	Reduce the switching sensitivity of the On/Off-grid (applied to the places where the grid is unstable or inverter always entered off-grid mode for some reasons)
OffGrid ReConn.	When the power grid is off, the inverter can automatically restart the back-up output after a fault or overloading protection occurred if the Off-grid Restart is ON. Otherwise, the back-up output needs to be restarted manually
FW Updating	Firmware Updating
E-Day	Daily Energy Generation
E-Total	Total Energy Generation
H-Total	Total Generating Hours
System Info	System Information
FW Version	Firmware Version
SN	Series Number

Fault Info	Fault Information
RSSI	Received Signal Strength Indicator
WiFi Reset	WiFi Reset
WiFi Reld	WiFi Reload, to reload the WiFi module to factory settings
Export Limit	On-Grid Export Limit Function Switch
Feed in Grid	Set the percentage of the power that is allowed to feed to the grid
Re-Conect	Fault Reconnection Time
CT Ratio	Current Transformer Ratio Setting
Modbus Addr	Modbus Address Setting
Battery_ID Set	Set Battery Model
System Maint.	System maintenance, includes inverter stop and run, system restart

6.3 Auto-Test

This function is only valid when the Italian safety code is selected. We support two methods for performing the Auto-test: via the inverter screen and via the CESC Portal.

On the screen, the Auto-test can be performed as shown in the figure below:

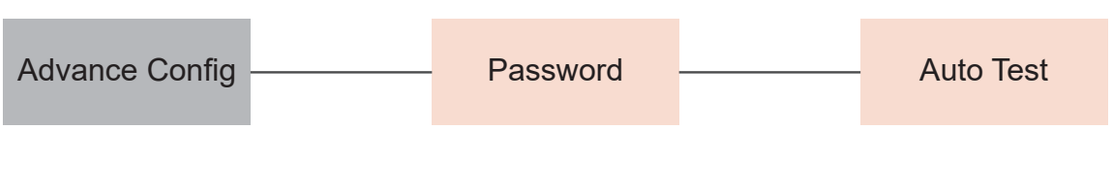

On the monitoring platform, the Auto-test can be performed as shown in the figure below:

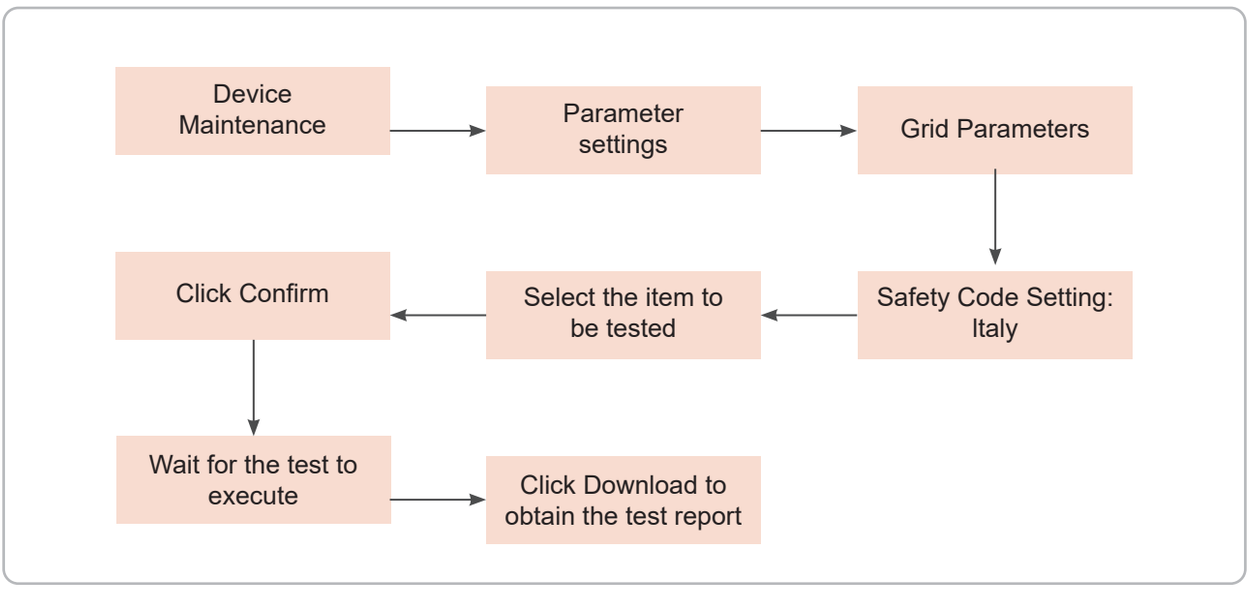

The auto test will start when the correct test item is selected, and the test result will be displayed on the screen when it finished. If the test was successful, it will display “Test Pass”, otherwise will display “Test Fail”. After each item tested, the inverter will reconnect to the grid and automatically start the next test according to the requirements of CEI 0-21.

6.4 Online Monitoring APP

CESC inverter provides a monitoring port that can collect and transmit data from the inverter to CESC monitoring platform via an external monitoring device. Please refer to the product nameplate on side of enclosure to get the monitoring application. If download issues exist , contact your dealer or CESC technical support.

NOTE

- Inverter is not a metering device, data are for refrence only.

Saturn 3-8K LVS Pro series

07 Troubleshooting

7.1 Error Message

CESC Saturn 3-8K LVS Pro series hybrid inverter is designed in accordance with grid operation standard, and conform to the requirements of the safety and EMC. The inverter had passed a series of rigorous tests to ensure it runs sustainably and reliably before shipment. When a fault occurs, the corresponding fault messages will display on the OLED display, and in this case, the inverter might stop feeding into grid.
The fault messages and their corresponding troubleshooting methods are listed below:

Error Message		Description	Troubleshooting
1	GFCICheckFault	Low PV Input-to-Ground Insulation Resistance Detected During Operation.	1.Allow the device 3 minutes for automatic recovery. 2.If issue persists after 3 minutes, select Restart on CESC Portal. Wait 3 minutes for reboot. 3.If occasional, may resolve automatically after grid anomaly clears. No action required. 4.If frequent/persistent, check PV string-to-ground insulation resistance. 5.If the issue persists, please contact CESC.
2	HCTCheckFault	AC Sensor Sampling Anomaly.	1.Allow the device 3 minutes for automatic recovery. 2.If issue persists after 3 minutes, select Restart on CESC Portal. Wait 3 minutes for reboot. 3.If the issue persists, please contact CESC.
3	OffGridVolHigh	Overvoltage at Off-Grid Port Due to Load Shedding.	1.Allow the device 3 minutes for automatic recovery. 2.If issue persists after 3 minutes, select Restart on CESC Portal. Wait 3 minutes for reboot. 3.If occasional, caused by load switching. No action needed. 4.If the issue persists, please contact CESC.
4	PvHWConOC	1.Incorrect PV Array Configuration. 2.Hardware Failure.	1.Allow the device 3 minutes for automatic recovery. 2.If issue persists after 3 minutes, select Restart on CESC Portal. Wait 3 minutes for reboot. 3.If the issue persists, please contact CESC.
5	IoCommFailure	Loose Parallel-Comm Cable or Damaged Parallel I/O Chip.	1.Allow the device 3 minutes for automatic recovery. 2.If issue persists after 3 minutes, select Restart on CESC Portal. Wait 3 minutes for reboot. 3.If the issue persists, please contact CESC.
6	ParalellAcLineReverse	Reverse Polarity on Parallel AC Cables.	1.Check parallel AC cable polarity. 2.If the issue persists, please contact CESC.
7	GenFault	1.Fault Persists Without Generator Connection. 2.Generator Safety Compliance Violation During Operation.	1.Verify generator power wiring. 2.Check generator signal wiring. 3.If the issue persists, please contact CESC.
8	NoUtility	1.Grid Power Outage. 2.AC Line or Breaker Disconnected.	1.Ensure grid port connection secure. 2.Confirm local grid power available. 3.If the issue persists, please contact CESC.

9	GFCIFault	Low PV Input-to-Ground Insulation Resistance Detected During Operation.	1.Allow the device 3 minutes for automatic recovery. 2.If issue persists after 3 minutes, select Restart on CESC Portal. Wait 3 minutes for reboot. 3.If occasional, auto-recovery expected after grid anomaly clears. No action needed. 4.If frequent/persistent, check PV string-to-ground insulation resistance. 5.If the issue persists, please contact CESC.
10	ArmCanComFault	1.Communication Data Blockage. 2.Communication Hardware Link Failure.	1.Allow the device 3 minutes for automatic recovery. 2.If issue persists after 3 minutes, select Restart on CESC Portal. Wait 3 minutes for reboot. 3.If the issue persists, please contact CESC.
11	HighTempFault	1.Poor Inverter Ventilation. 2.Ambient Temperature Exceeds Limit. 3.Internal Fan Malfunction.	1.Check ventilation & ambient temperature. 2.Improve ventilation if poor/overheated. 3.Contact CESC if conditions normal.
12	DCOVFault	PV Array Configuration Error: Excessive Panels per String Causing Voc > Inverter Maximum Voltage.	1.Verify PV voltage meets rating. 2.Replace panels if non-compliant. 3.If compliant, restart via Web. Wait 3min. 4.If the issue persists, please contact CESC.
13	CanLossFault	1.Communication Data Blockage. 2.Communication Hardware Link Failure.	1.Allow the device 3 minutes for automatic recovery. 2.If issue persists after 3 minutes, select Restart on CESC Portal. Wait 3 minutes for reboot. 3.If the issue persists, please contact CESC.
14	GridVoltFault	Grid Voltage Beyond Allowable Range or HVRT Duration Exceeded.	1.If occasional, may auto-recover after grid stabilizes. No action. 2.If frequent, check grid voltage range. Contact utility if abnormal. 3.If persistent, check AC breaker/cable. 4.If the issue persists, please contact CESC.
15	IsolationFault	1.PV String-to-Ground Short Circuit. 2.Damp Environment Causing Insulation Degradation.	1.Check PV string-to-PE resistance. Fix if shorted. 2.Verify inverter PE wire connected. 3.If the issue persists, please contact CESC.
16	DCIOutRange	DC Component in AC Output Exceeds Safety Standards or Default Limits.	1.Allow the device 3 minutes for automatic recovery. 2.If issue persists after 3 minutes, select Restart on CESC Portal. Wait 3 minutes for reboot. 3.If the issue persists, please contact CESC.
17	BackupOutputFail	Prevention of Continuous Inverter Overload.	1.Check off-grid port devices for damage. 2.Confirm device power ≤ rating. 3.Check for short circuits. 4.Inspect connected appliances. 5.If the issue persists, please contact CESC.
18	DspCanComFault	1.Communication Data Blockage. 2.Communication Hardware Link Failure.	1.Allow the device 3 minutes for automatic recovery. 2.If issue persists after 3 minutes, select Restart on CESC Portal. Wait 3 minutes for reboot. 3.If the issue persists, please contact CESC.
19	PvSWConOC	1.Incorrect PV Array Configuration. 2.Hardware Failure.	1.Allow the device 3 minutes for automatic recovery. 2.If issue persists after 3 minutes, select Restart on CESC Portal. Wait 3 minutes for reboot. 3.If the issue persists, please contact CESC.

Saturn 3-8K LVS Pro series

20	InvPwmFault	Hardware Failure.	1.Allow the device 3 minutes for automatic recovery. 2.If issue persists after 3 minutes, select Restart on CESC Portal. Wait 3 minutes for reboot. 3.If the issue persists, please contact CESC.
21	OffGridGround-ing	1.Inverter Protective Earth (PE) Wire Disconnected. 2.Absence of Isolation Trans-former on Inverter Output When PV String is Grounded.	1.Verify equipment grounding. 2.If issue persists after 3 minutes, select Restart on CESC Portal. Wait 3 minutes for reboot. 3.If the issue persists, please contact CESC.
22	RelayCheckFault	1.Relay Anomaly (Relay Short Circuit). 2.Relay Sampling Circuit Anomaly. 3.AC-Side Wiring Anomaly (Potential Loose Connection or Short Circuit).	1.Allow the device 3 minutes for automatic recovery. 2.If issue persists after 3 minutes, select Restart on CESC Portal. Wait 3 minutes for reboot. 3.If the issue persists, please contact CESC.
23	AfciFault	Arc Fault Triggered.	1.Allow the device 3 minutes for automatic recovery. 2.If issue persists after 3 minutes, select Restart on CESC Portal. Wait 3 minutes for reboot. 3.If the issue persists, please contact CESC.
24	AfciDeviceFault	Arc Detection Module Failure During Self-Test.	1.Allow the device 3 minutes for automatic recovery. 2.If issue persists after 3 minutes, select Restart on CESC Portal. Wait 3 minutes for reboot. 3.If the issue persists, please contact CESC.
25	GridFreqFault	Grid Frequency Exceeds Regulatory Threshold	1.Check on-grid port connection. 2.Confirm local grid power available. 3.If the issue persists, please contact CESC.
26	FlashRWFault	1.Flash Memory Content Al-tered. 2.Flash Memory End-of-Life.	1.Allow the device 3 minutes for automatic recovery. 2.If issue persists after 3 minutes, select Restart on CESC Portal. Wait 3 minutes for reboot. 3.If the issue persists, please contact CESC.
27	cPVStrReverse	PV-Side Wiring Error	1.Inspect PV +/- polarity wiring. 2.If the issue persists, please contact CESC.
28	UpsAcLow	Insufficient DC/Bus Energy Causing Low Inverter Volt-age.	1.Allow the device 3 minutes for automatic recovery. 2.If unresolved after 3min, check battery energy/ current limit in CESC Portal. 3.If the issue persists, please contact CESC.
29	InvFirstHwOc	Control Overcurrent Due to Grid/Load Transient.	1.Allow the device 3 minutes for automatic recovery. 2.If issue persists after 3 minutes, select Restart on CESC Portal. Wait 3 minutes for reboot. 3.If the issue persists, please contact CESC.
30	InvHwOc	Control Overcurrent Due to Grid/Load Transient.	1.Allow the device 3 minutes for automatic recovery. If issue persists after 3 minutes, select Restart on CESC Portal. Wait 3 minutes for reboot. 3.If the issue persists, please contact CESC.
31	SoftCtrlShut-down	Software/APP-Initiated Shut-down	1. Select Start button in CESC Portal. 2.If the issue persists, please contact CESC.
32	IoBusComWarn	1.Communication Data Blockage. 2.Communication Hardware Link Failure.	1.Allow the device 3 minutes for automatic recovery. 2.If issue persists after 3 minutes, select Restart on CESC Portal. Wait 3 minutes for reboot. 3.If the issue persists, please contact CESC.

33	FanStall	1.Fan Power Supply Anomaly. 2.Mechanical Failure (Stall). 3.Fan Aged/Damaged.	1.Allow the device 3 minutes for automatic recovery. 2.If issue persists after 3 minutes, select Restart on CESC Portal. Wait 3 minutes for reboot. 3.If the issue persists, please contact CESC.
34	LoadRelayChkFail	Load Relay Sampling Anomaly	1.Allow the device 3 minutes for automatic recovery. 2.If issue persists after 3 minutes, select Restart on CESC Portal. Wait 3 minutes for reboot. 3.If the issue persists, please contact CESC.
35	BypassRelayChkFail	Bypass Relay Sampling Anomaly	1.Allow the device 3 minutes for automatic recovery. 2.If issue persists after 3 minutes, select Restart on CESC Portal. Wait 3 minutes for reboot. 3.If the issue persists, please contact CESC.
36	IllegalBatCnnect	Abnormal Battery Connection	1.Check battery terminal wiring. 2.Verify battery compatibility. 3.If the issue persists, please contact CESC.
37	SdspDAB_OC	Inverter Charge/Discharge Overcurrent	1.Check for grid port short circuits. 2.If the issue persists, please contact CESC.
38	Meter_comm_fail	1.Energy Meter Not Connected. 2.Wiring Error in Meter-to-Inverter Communication Cable.	1.Allow the device 3 minutes for automatic recovery. 2.If issue persists after 3 minutes, select Restart on CESC Portal. Wait 3 minutes for reboot. 3.If the issue persists, please contact CESC.
39	DSP_comm_fail	DSP-ARM Interconnect Hardware Failure.	1.Allow the device 3 minutes for automatic recovery. 2.If issue persists after 3 minutes, select Restart on CESC Portal. Wait 3 minutes for reboot. 3.If the issue persists, please contact CESC.
40	BMS_comm_fail	1.Battery Not Connected. 2.Wiring Error in Battery-to-Inverter Communication Cable. 3.Incompatible Battery Brand.	1.Allow the device 3 minutes for automatic recovery. 2.If issue persists after 3 minutes, select Restart on CESC Portal. Wait 3 minutes for reboot. 3.If the issue persists, please contact CESC.
41	Charge_Pile_comm_fail	EV Charger Communication Anomaly.	1.Allow the device 3 minutes for automatic recovery. 2.If issue persists after 3 minutes, select Restart on CESC Portal. Wait 3 minutes for reboot. 3.If the issue persists, please contact CESC.
42	Meter_data_error	1.Energy Meter Damaged or Miswired. 2.Wiring Error in Meter-to-Inverter Communication Cable.	1.Confirm meter power status. 2.If powered, inspect RS-485 cable for damage/reverse polarity. 3.If the issue persists, please contact CESC.
43	Flash_error	1.Flash Memory Content Altered. 2.Flash Memory End-of-Life.	1.Allow the device 3 minutes for automatic recovery. 2.If issue persists after 3 minutes, select Restart on CESC Portal. Wait 3 minutes for reboot. 3.If the issue persists, please contact CESC.
44	Abnormal_Burning	Firmware Upgrade Failed Due to Network Issue.	1.Reflash firmware. 2.If the issue persists, please contact CESC.
45	Charge_over_current	Excessive Battery Charging Current.	1.Allow the device 3 minutes for automatic recovery. 2.If persists after 3min, restart battery system via battery terminal button. 3.If the issue persists, please contact CESC.

46	Disacharge_ over_current	Excessive Battery Discharging Current.	1.Allow the device 3 minutes for automatic recovery. 2.If persists after 3min, restart battery system via battery terminal button. 3.If the issue persists, please contact CESC.
47	Cell_under_temp	Battery Ambient Temperature Too Low.	1.Allow the device 3 minutes for automatic recovery. 2.If persists after 3min, restart battery system via battery terminal button. 3.If the issue persists, please contact CESC.
48	Cell_over_temp	Battery Ambient Temperature Too High.	1.Allow the device 3 minutes for automatic recovery. 2.If persists after 3min, restart battery system via battery terminal button. 3.If the issue persists, please contact CESC.
49	Cell_under_vol	Cell Undervoltage Due to Battery Over-Discharge.	1.Allow the device 3 minutes for automatic recovery. 2.If persists after 3min, restart battery system via battery terminal button. 3.If the issue persists, please contact CESC.
50	Cell_over_vol	Cell Overvoltage Due to Battery Over-Charge.	1.Allow the device 3 minutes for automatic recovery. 2.If persists after 3min, restart battery system via battery terminal button. 3.If the issue persists, please contact CESC.
51	Bms_System_ error	Battery System Fault.	1.Allow the device 3 minutes for automatic recovery. 2.If persists after 3min, restart battery system via battery terminal button. 3.If the issue persists, please contact CESC.

7.2 Maintenance

7.2.1 External Fan Maintenance

For maintenance of the external fans on the Saturn 3-8K LVS Pro series, the following steps should be performed:
1. Check for any fan fault alarms.
2. Inspect for abnormal noises during fan operation.
3. Clean the fans or replace them according to the instructions below if necessary.

Fan Replacement Procedure:
① Remove the four fan baffle screws.

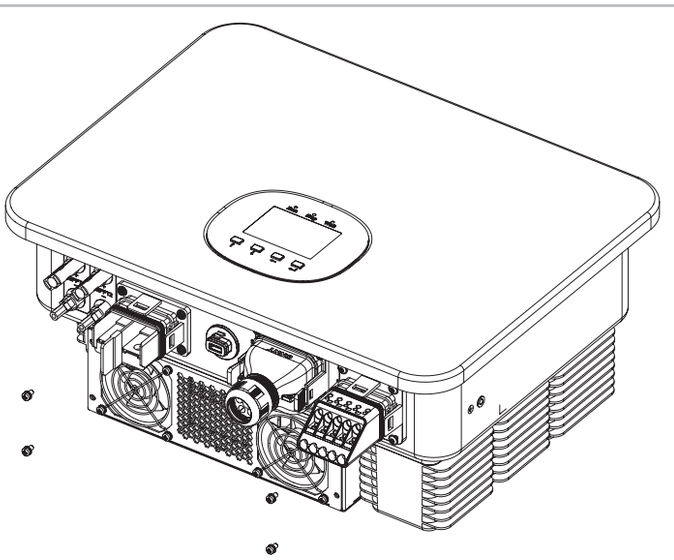

Figure 7-1

② Detach the fan baffle and disconnect the fan terminals.

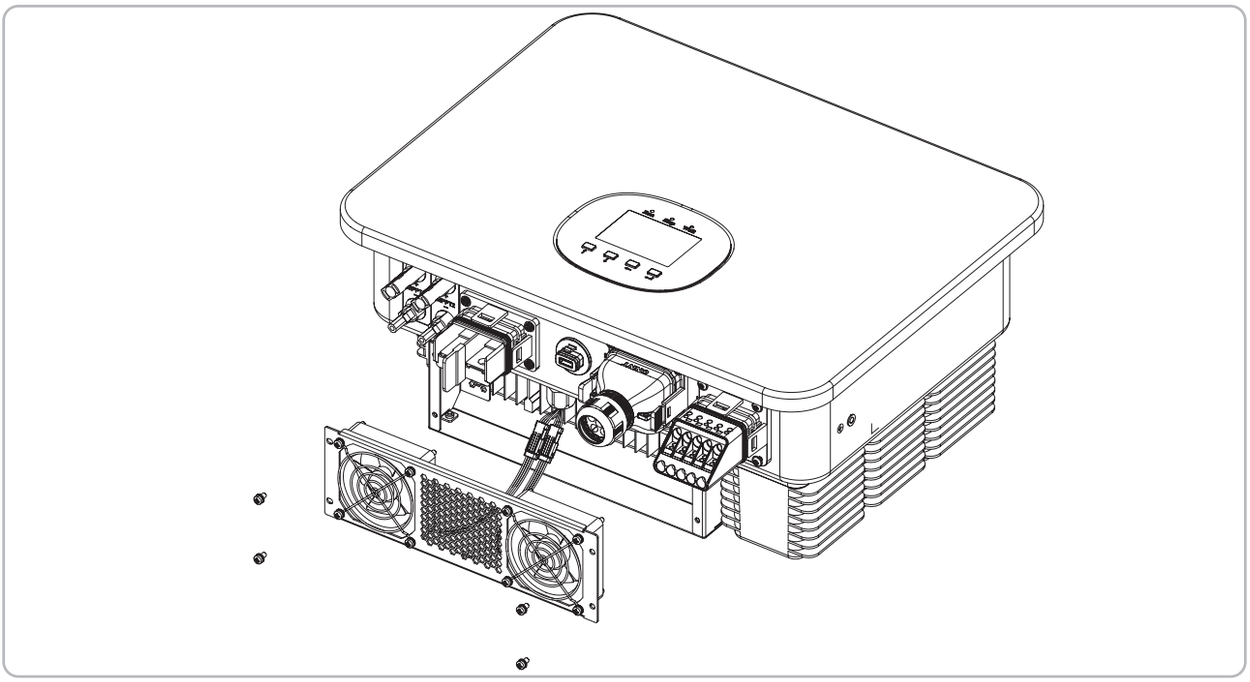

Figure 7-2

③ Replace the faulty fan and its baffle with new components.

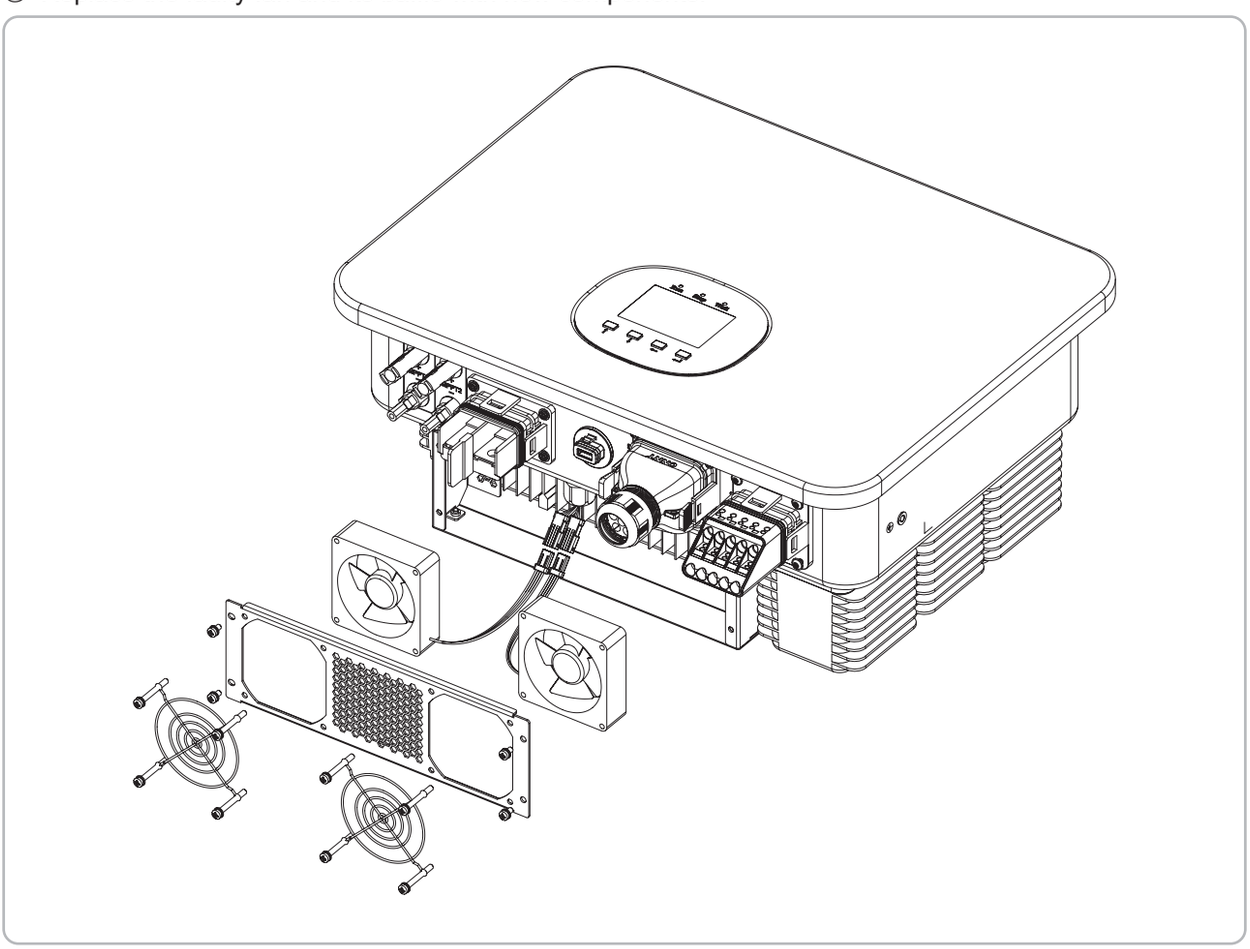

Figure 7-2

7.2.2 Maintenance Notes

⚠ DANGER

- Risk of inverter damage or personal injury due to incorrect service!
- Always keep in mind that the inverter is powered by dual sources: PV strings and utility grid.
- Before any service work, observe the following procedure.
  1. Disconnect the AC circuit breaker and then set the DC load-break switch of the inverter to OFF;
  2. Wait at least 5 minutes for inner capacitors to discharge completely;
  3. Verify that there is no voltage or current before pulling any connector.

⚠ CAUTION

- Keep non-related persons away!
- A temporary warning sign or barrier must be posted to keep non-related persons away while performing electrical connection and service work.

ⓘ ATTENTION

- Restart the inverter only after removing the fault that impairs safety performance.
- As the inverter contains no component parts that can be maintained, never arbitrarily replace any internal components. For any maintenance need, please contact CESC. Otherwise, CESC shall not be held liable for any damage caused.

NOTE

- Servicing of the device in accordance with the manual should never be undertaken in the absence of proper tools, test equipment or the latest revision of the manual which has been clearly and thoroughly understood.

Items	Methods	Period
System clean	Check the temperature and dust of the inverter. Clean the inverter enclosure if necessary. Check if the air inlet and outlet are normal. Clean the air inlet and outlet if necessary.	Six months to a year (it depends on the dust contents in air.)

08 Technical Parameters

Model	Saturn 3K LVS Pro	Saturn 3.6K LVS Pro	Saturn 4K LVS Pro	Saturn 4.6K LVS Pro
PV Input				
Start-up Voltage (V)	58	58	58	58
Max. DC Input Voltage (V)	600	600	600	600
Rated DC Input Voltage (V)	360	360	360	360
MPPT Voltage Range (V)	80-550	80-550	80-550	80-550
No. of MPP Trackers	1	1	2	2
No. of DC Inputs per MPPT	1	1	1/1	1/1
Max. Input Current (A)	20	20	20/20	20/20
Max. Short-circuit Current (A)	25	25	25/25	25/25
Battery				
Battery Type	Lithium battery (with BMS)/Lead Acid			
Battery Communication Mode	CAN			
Battery Voltage Range (V)	40-60	40-60	40-60	40-60
Max. Charge/Discharge Current (A)	80/80	80/80	100/100	100/100
Output (Grid)				
Rated Output Power (W)**	3,000	3,680*	4,000	4,600
Max. Output Power (W)	3,300	3,680*	4,400	5,060
AC Output Rated Apparent Power (VA)	3,000	3,680	4,000	4,600
Max. Apparent Power (VA)	3,300	3,680*	4,400	5,060
Rated Output Voltage (V)**	L/N/PE, 220/230			
Rated AC Frequency (Hz)	50/60			
AC Output Rated Current (A)	13	16	17.4	20
Max. Output Current (A)	15	16	20	23
The measured Inrush current (A)	8.8A@28μs			
Max. Output Fault Current (A)	50	50	50	50
Max. Output Overcurrent Protection (A)	50	50	50	50
Power Factor	0.8 leading …0.8 lagging			
Max. Total Harmonic Distortion	<3% @Rated Output Power			
DCI	<0.5%In			

Saturn 3-8K LVS Pro series

Output (Back-up)				
Rated Output Power (W)	3,000	3,680*	4,000	4,600
Max. Output Power (W)	3,300	3,680*	4,400	5,060
Back-up Output Rated Apparent Power (VA)	3,000	3,680	4,000	4,600
Max. Apparent Power (VA)	3,300	3,680*	4,400	5,060
Back-up Output Rated Current (A)	13	16	17.4	20
Max. Output Current (A)	15	16	20	23
UPS Switching Time	<10ms			
Rated Output Voltage (V)	L/N/PE, 220/230			
Rated AC Frequency (Hz)	50/60			
Peak Output Apparent Power (VA)	6,000①, 10s	7,200①, 10s	8,000①, 10s	10,000①, 10s
Load Capacity of Motors	/	/	/	/
Efficiency				
Max. Efficiency	97.6%	97.6%	97.6%	97.6%
European Efficiency	97.0%	97.0%	97.0%	97.0%
MPPT Efficiency	99.9%	99.9%	99.9%	99.9%
Protection				
DC Reverse Polarity Protection	Integrated			
Insulation Resistance Protection	Integrated			
DC Switch	Integrated			
AFCI	Optional			
Surge Protection	Integrated			
Over-temperature Protection	Integrated			
Residual Current Protection	Integrated			
Islanding Protection	Integrated			
AC Over-voltage Protection	Integrated			
Overload Protection	Integrated			
AC Short-circuit Protection	Integrated			
General Data				
Over Voltage Category	DC：Ⅱ；AC：Ⅱ			
Dimensions (mm)	488*374*205			

Saturn 3-8K LVS Pro series

Weight (KG)	20 / 21
Protection Degree	IP66
Self-consumption at Night (W)	< 15
Topology	Transformerless
Operating Temperature Range (°C)	-25~60
Relative Humidity (%)	0~100
Operating Altitude (m)	3000
Cooling	Natural Convection / Fan
Noise Level (dB)	<40
Display	TFT3.5 LCD/ OLED
Communication	WiFi/GPRS/LAN(Optional)

① The output power will exceed the rated value only when the power in the PV array is sufficient, and the duration of the overload is relating to the overload power.
* For G98 setting the Maximum output Power and Rated Power and Max Apparent Power in (W and VA) is equal to and not more than (3600 W) or 15.6A
** Due to differences in voltage values in various countries, minor variations may occur. The final interpretation rights belong to CESC.

Model	Saturn 5K LVS Pro	Saturn 6K LVS Pro	Saturn 7.5K LVS Pro	Saturn 8K LVS Pro
PV Input				
Start-up Voltage (V)	58	58	58	58
Max. DC Input Voltage (V)	600	600	600	600
Rated DC Input Voltage (V)	360	360	360	360
MPPT Voltage Range (V)	80-550	80-550	80-550	80-550
No. of MPP Trackers	2	2	2	2
No. of DC Inputs per MPPT	1/1	1/1	1/1	1/1
Max. Input Current (A)	20/20	20/20	20/20	20/20
Max. Short-circuit Current (A)	25/25	25/25	25/25	25/25
Battery				
Battery Type	Lithium battery (with BMS)/Lead Acid			
Battery Communication Mode	CAN			
Battery Voltage Range (V)	40-60	40-60	40-60	40-60

Saturn 3-8K LVS Pro series

Max. Charge/Discharge Current (A)	120/120	120/120	160/160	160/160
Output (Grid)				
Rated Output Power (W)**	5,000	6,000	7,500	8,000
Max. Output Power (W)	5,500	6,600	8,250	8,800
AC Output Rated Apparent Power (VA)	5,000	6,000	7,500	8,000
Max. Apparent Power (VA)	5,500	6,600	8,250	8,800
Rated Output Voltage (V)**	L/N/PE, 220/230			
Rated AC Frequency (Hz)	50/60			
AC Output Rated Current (A)	21.7	26.1	32.6	34.8
Max. Output Current (A)	25	30	37.5	40
The measured Inrush current (A)	8.8A@28μs			
Max. Output Fault Current (A)	80	80	80	80
Max. Output Overcurrent Protection (A)	80	80	80	80
Power Factor	0.8 leading …0.8 lagging			
Max. Total Harmonic Distortion	<3% @Rated Output Power			
DCI	<0.5%In			
Output (Back-up)				
Rated Output Power (W)	5,000	6,000	7,500	8,000
Max. Output Power (W)	5,500	6,600	8,250	8,800
Back-up Output Rated Apparent Power (VA)	5,000	6,000	7,500	8,000
Max. Apparent Power (VA)	5,500	6,600	8,250	8,800
Back-up Output Rated Current (A)	21.7	26.1	32.6	34.8
Max. Output Current (A)	25	30	37.5	40
UPS Switching Time	<10ms			
Rated Output Voltage (V)	L/N/PE, 220/230			
Rated AC Frequency (Hz)	50/60			
Peak Output Apparent Power (VA)	10,000[①], 10s	12,000[①], 10s	12,000[①], 10s	12,000[①], 10s
Load Capacity of Motors	4HP	4HP	4HP	4HP
Efficiency				
Max. Efficiency	97.6%	97.6%	97.6%	97.6%
European Efficiency	97.0%	97.0%	97.0%	97.0%
MPPT Efficiency	99.9%	99.9%	99.9%	99.9%

Saturn 3-8K LVS Pro series

Protection				
DC Reverse Polarity Protection	Integrated			
Insulation Resistance Protection	Integrated			
DC Switch	Integrated			
AFCI	Optional			
Surge Protection	Integrated			
Over-temperature Protection	Integrated			
Residual Current Protection	Integrated			
Islanding Protection	Integrated			
AC Over-voltage Protection	Integrated			
Overload Protection	Integrated			
AC Short-circuit Protection	Integrated			
General Data				
Over Voltage Category	DC : Ⅱ ; AC : Ⅱ			
Dimensions (mm)	488*374*205			
Weight (KG)	20 / 21			
Protection Degree	IP66			
Self-consumption at Night (W)	< 15			
Topology	Transformerless			
Operating Temperature Range (°C)	-25~60			
Relative Humidity (%)	0~100			
Operating Altitude (m)	3000			
Cooling	Natural Convection / Fan			
Noise Level (dB)	<40	<50	<50	<50
Display	TFT3.5 LCD/ OLED			
Communication	WiFi/GPRS/LAN(Optional)			

① The output power will exceed the rated value only when the power in the PV array is sufficient, and the duration of the overload is relating to the overload power.
** Due to differences in voltage values in various countries, minor variations may occur. The final interpretation rights belong to CESC.

Your project.
Our support.

SALES & SERVICE

Wayton Energy Tech Co., Ltd.
tech@waytonenergy.com
www.waytonenergy.com

For model selection, quotations and service coordination, contact WAYTON.
Manufacturer technical specifications and applicable warranty terms remain unchanged.