USER MANUAL

Saturn Residential Storage System

MODEL: Saturn LV5-02

Lithium-ion Battery



Sales & service
Wayton Energy Tech Co., Ltd.
tech@waytonenergy.com
www.waytonenergy.com

All information in this manual is subject to copyright and other intellectual property rights of CESC New Energy Technology Co., Ltd. This manual should not be modified, reproduced or copied, in whole or in part. The un-authorized use without prior written permission is strictly prohibited. CESC New Energy Technology Co., Ltd. All rights reserved.

Please read this entire document carefully before installing or using the battery system. Failure to do so or to follow any of the instructions or warnings in this document can result in electrical shock, serious injury or death, can damage battery, potentially rendering it inoperable. Warranty claims are invalid, if damage is caused by human error in a manner inconsistent with the installation manual's instructions.

The information included in this manual is verified by CESC to be accurate at the time of publication. However, due to the continuous improvement of products, this manual is subject to change without prior notice. Unless otherwise specified, this manual is for operational guidance only, and all statements contained herein do not constitute any form of warranty.

The illustrations in this manual are intended to help explain operating system configurations and installation instructions. Any confusion, please contact CESC immediately for advice and clarification. Thank you for your choice and trust.

Contents

01 Safety 02
1.1 Safety instructions 02
1.2 Symbols in this document 02
1.3 Qualified personnel 02
1.4 Equipment requirements 03
1.5 Electrical requirements 03
1.6 Installation requirements 03
1.7 Environment requirements 04

02 Product introduction 05
2.1 Dimension and weight 05
2.2 Appearance 05
2.2.1 Battery system appearance 05
2.2.2 Battery module appearance 06
2.3 Battery system specifications 07
2.4 Peformance 07
2.5 Labels 08

03 Installation instructions 09
3.1 Installation contents 09
3.2 Tools & Instruments prepared (not supplied) 10
3.3 Installation location and clearance 11
3.4 Equipment installation 12
3.4.1 Wall-mounted installation 12
3.4.2 Ground Installation (Optional) 13

04 Parallel instructions (Optional) 14
4.1 Battery module capacity description 14
4.2 Parallel Box overview 15
4.3 Installation contents 16
4.4 Install the parallel box 17

05 Cable connection 19
5.1 External electrical connection of the battery system 19
5.2 Installing an external grounding 19
5.3 Installing external DC power cables 20
5.4 Installing an external signal cable 20
5.5 Parallel cable connection (Optional) 21
5.6 Install the cover 22

06 System commissioning
6.1 Inspection before power on 24
6.2 System power on 24
6.3 Power off 24
6.4 LED indicator 25

07 System maintenance 28
7.1 Routine maintenance 28

08 What to do in case of an emergency 29
8.1 In case of fire 29
8.2 In case of flooding 29
8.3 In case of unusual noises 29
8.4 In case of unusual smell or smoke 29

01 Safety

1.1 Safety instructions

For safety reasons, please read this entire manual before installing, servicing or using. Failure to comply with the instructions can result in electrical shock, serious injury, death or can damage the battery, potentially rendering it inoperable.

CAUTION

Proper disposal of batteries is required. Please refer to your local regulations for disposal requirements.

1.2 Symbols in this document

This manual uses the following symbols to highlight essential information:

	WARNING
	CAUTION
	DANGER
	REFER TO OPERATING INSTRUCTIONS
	DO NOT THROW AWAY
	RECYCLABLE
	HEAVY WEIGHT MAY CAUSE SERIOUS INJURIES
	GROUND (EARTH) CONNECTION
	RISK OF ELECTRIC SHOCK ENERGY STORAGE DISCHARGE TIME

1.3 Qualified personnel

Battery Management System (BMS) installation and maintenance must be carried out only by certified installers who possess all following qualifications and experience:

- Knowledge of the installation of electrical devices.
- Knowledge of the functional principles and operation of on-grid and off-grid systems.
- Knowledge of the dangers and risks associated with installing and using electrical devices and acceptable mitigation methods.
- Knowledge of and adherence to this manual and all safety precautions and best practices.
- Knowledge of the protective measures to minimize hazards to themselves and others.

1.4 Equipment requirements

If the battery module seems to be damaged, pack it in its original container, and then return it to your distributor.

- Do not damage the battery module.
- Do not use water to clean electrical components inside or outside of the battery module.
- Do not stand on, lean on, or sit on the top of the battery module.
- Promptly repaint any scratches that occur during the transportation or installation of the battery module.
- Exposing a scratched battery module to the outdoors for extended periods is not advisable.

1.5 Electrical requirements

- Ensure that the power setting matches the rated input of this power supply.
- Make sure to connect the protective grounding to prevent an electric shock before activating the power.
- Never sever the internal or external protective grounding wire, or disconnect the wiring of protective grounding terminal. Such actions can create a shock hazard, potentially causing injury.
- Do not connect the battery module directly to photo-voltaic (PV) solar wiring.
- Do not short-circuit the wiring terminals of the battery module. Short circuits can cause a fire hazard.

DANGER

Before connecting cables, ensure that the equipment is intact. Otherwise, electric shocks or fire hazards may occur.

1.6 Installation requirements

- Understand the components and functioning of a grid-tied PV power system and relevant local standards.
- Do not install, use, or operate outdoor equipment and cables in harsh weather conditions such as lightning, rain, snow, and level 6 or stronger wind.
- Wear proper personal protective equipment (PPE) during operation. If there is a probability of personal injury or equipment damage, immediately stop the operations, report the case to the supervisor, and take feasible protective measures.
- Tighten screws using tools when installing the battery module.
- To prevent fire due to high temperature, ensure that the ventilation vents of the heat dissipation system are not blocked when the battery is running.
- After installing the battery module, remove idle packing materials such as cartons, foam, plastics, and cable ties from the equipment area.

DANGER

Do not work with power turned on during installation.

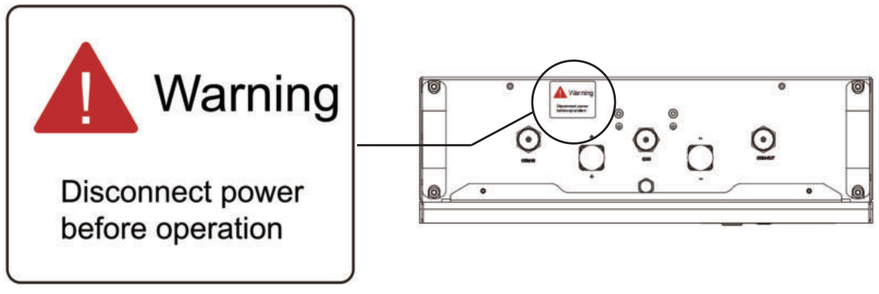

Example Product: Saturn LV5-02 (Top View)

WARNING

It is not recommended to connect a circuit breaker or isolating switch, especially an AC circuit breaker, between the battery and the inverter connection line. If a DC circuit breaker or isolating switch must be connected in series, it needs to be closed before starting the battery; otherwise, there is a risk of battery damage or potential electric shock.

1.7 Environment requirements

Operating Temperature	Optional: Charge: 0°C - 55°C/Discharge: -20°C - 55°C(without heating film) Charge: -20°C - 55°C/Discharge: -20°C - 55°C(with heating film)
Humidity	≤ 95%
Storage < =6 months	Stage of Energy (SOE): 50% initial
Maximum Altitude	Max. 3000m (9842 ft)

- Install the battery module in a dry and well-ventilated environment to ensure good heat dissipation.
- Install the battery module in a sheltered place or install an awning over it.
- Install the battery module at a height that prevents damage from flooding.
- Avoid exposing the battery module to direct sunlight or water.
- Do not install the battery module near heating equipment.
- Do not place any flammable or explosive materials around the battery module.
- Do not subject the battery module to high pressures.
- Do not place any objects on top of the battery module.
- Do not expose the battery module to ambient temperatures above 60°C (140°F) or below -30°C (-22°F).
- Children are not allowed to enter the installation position.
- Operating or storing the battery module in temperatures outside its specified range might cause damage to the battery module.
- Ensure that there is minimal dust and dirt in the area.
- Ensure that no water sources are above or near the battery module, including downspouts, sprinklers, or faucets.
- The battery module site must be equipped with qualified fire extinguishing facilities, such as fire extinguishing sands and powder fire extinguishers.

CAUTION

The recommended operating temperature ranges from 15°C to 30°C.

02 Product introduction

2.1 Dimension and weight

W*D*H: 500*160*660mm **Weight:** 49.1kg

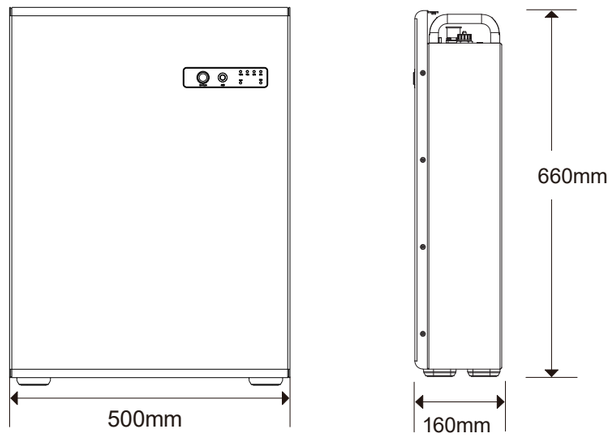

2.2 Appearance

2.2.1 Battery system appearance

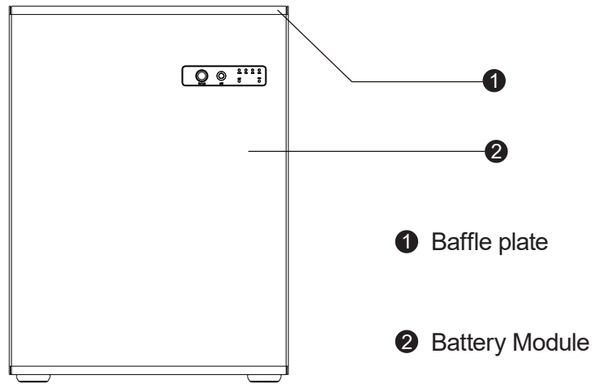

2.2.2 Battery module appearance

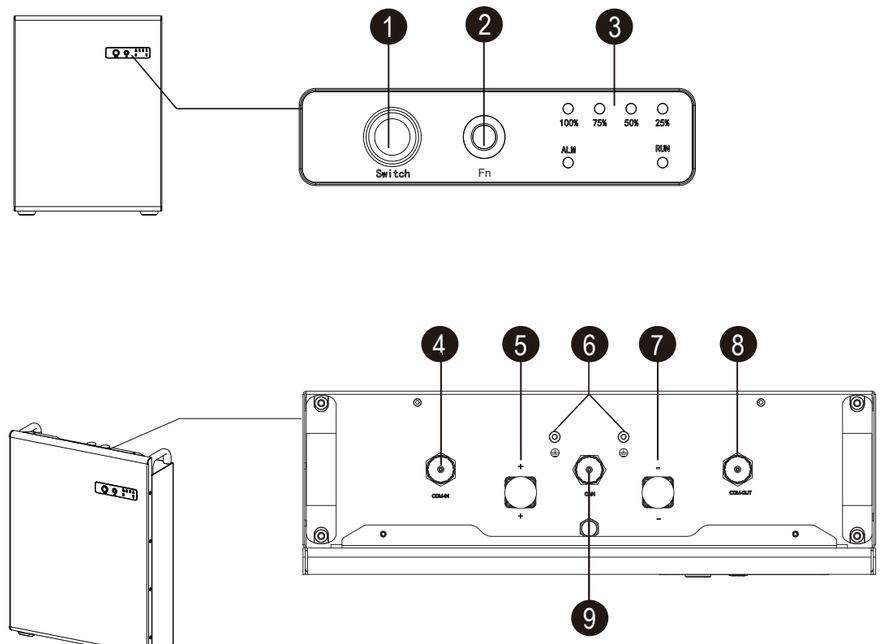

No.	Port Signs	Function Description
1	Switch	Switch on/off the battery system
2	Fn	1. Press once to assign an address; 2. Press and hold for 3 seconds to clear a fault; 3. Press and hold for 10 seconds to enter charging mode
3	LED	Indicates the battery system status, running green light, warning red light, SOC blue light
4	COM-IN	COM cable port (BAT to BAT in parallel)
5	B+	Power + (BAT to Parallel connection box)
6	⏚	Grounding point (BAT to PCS)
7	B-	Power - (BAT to Parallel connection box)
8	COM-OUT	COM cable port (BAT to BAT in parallel)
9	CAN	CAN cable port (BAT to PCS)

2.3 Battery system specifications

Saturn LV5-02 SYS Configuration List

Battery System Type	Saturn LV5-02	2*Saturn LV5-02	3*Saturn LV5-02	4*Saturn LV5-02
Nominal Energy [kWh]	5.12	10.24	15.36	20.48
Battery Module	Saturn LV5-02 51.2V 5.12kWh			
Number of Battery Modules	1	2	3	4
Cell Type	LFP ($LiFePO_4$)			
Nominal Voltage [V]	51.2			
Operating Voltage Range [V]	40-58.4			
Nominal Capacity [Ah]	100			
Max. Charge/Discharge Current [A]	100	200	260	260
Continue Discharge Output [kW]	5.12	10.24	13.312	13.312
Dimension [W/D/H. mm]	500*160*660			
Approximate Weight [KG]	49.1	98.2	147.3	196.4

2.4 Performance

Recommended max. Depth of Discharge	90%
LED Indicator	4 SOC LED (SOC: 25%~SOC:100% blue), 2 Condition LED (working green, alarming red)
IP Rating of Enclosure	IP65
Operating Temperature	Optional: Charge: 0°C - 55°C/Discharge: -20°C - 55°C(without heating film) Charge: -20°C - 55°C/Discharge: -20°C - 55°C(with heating film)
Storage Temperature	0°C~35°C
Humidity	≤95%
Altitude	≤3000m
Cycle Life	10 + years, ≥ 6000 cycles (70 % EOL,80 % DOD,25 °C)
Installation	Wall & Floor - mounted
Communication Port	CAN
Certification	UN38.3, EMC

The current is affected by temperature and SOC.

2.5 Labels

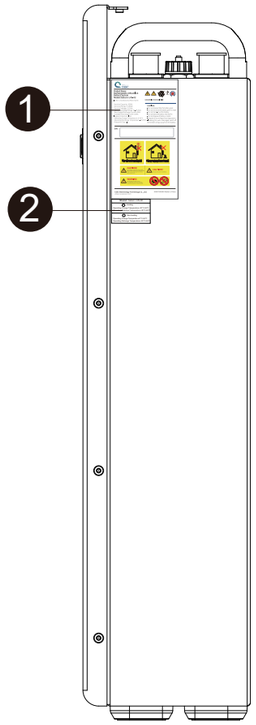

1 Battery System Label

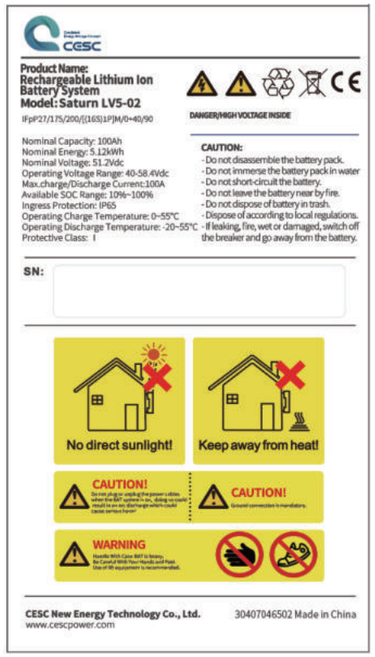

2 Option Label

Model: Saturn LV5-02
◯ Heating Operating Charge Temperature:-20°C-55°C Operating Disharge Temperature:-20°C-55°C
◯ Non-heating Operating Charge Temperature:0°C-55°C Operating Disharge Temperature:-20°C-55°C

03 Installation instructions

3.1 Installation contents

The following items are required for battery installation.


Battery Module x1

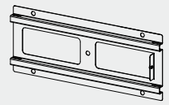
Wall-locking panel x1


back plane x 2

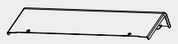
Top Cover x1

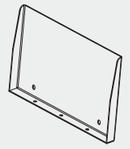
Panel x1ⓐ
(for Ground Installation)

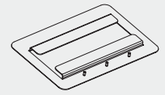
Panel x1ⓐ
(for Ground Installation)


Positive Power Cable（Red）
(BAT-PCS) x1
25mm², 1500mm

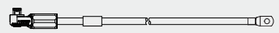
Negative Power Cable（Black）
(BAT-PCS) x1
25mm², 1500mm

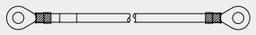
Ground Cable
(BAT-PCS) x1
10AWG, 1500mm

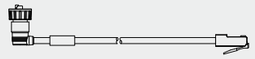
COM Cable
(BAT-PCS) x1
24AWG,1500mm


COM Cable (BAT-BAT) x1ⓐ
24AWG,400mm

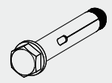
M8X60 Expansion Bolt x5


M4X10 Screw x 2


M5X12 Screw x 3


M6X12 Screw x 8


M6 Nut x 3ⓐ
(for Ground Installation)

ⓐ Stand for optional item to demand.

3.2 Tools & instruments prepared

The following tools shall be prepared before installation:

No.	Tool	Tool Name	Remarks
1		Driller	Drill holes on the wall
2		Wrench Set	Turning screws
3		Screwdriver	Turning screws
4		Marker	Mark the drilling hole positions on the wall
5		Safety gloves	Protect the hand

WARNING

The battery modules are heavy. Wear appropriate personal protective equipment (such as gloves and safety shoes) when handling the unit. Only a sufficient number of trained movers should lift the battery modules. The use of lift equipment is recommended.

3.3 Installation location and clearance

Installation Location Requirements:

- There must be no highly flammable or explosive materials nearby.
- The ambient temperature should be within the range of -20°C to 55°C (-4°F to 131°F).
- The battery module must be installed on flat leveled ground that can support its weight.
- Product shall be installed indoors (e.g. in a basement or a garage) or outdoors under an eave out of direct sunlight.

Recommendations:

- The building should be designed to withstand earthquakes.
- The area should be waterproof and properly ventilated. (IP65)
- The product should be installed out of reach of children and animals.

CAUTION

If the ambient temperature is outside the operating range, the battery module will stop operating to protect itself. The optimal temperature range for the battery module to operate is from 15°C to 30°C (59°F to 86°F). Frequent exposure to harsh temperatures may deteriorate the performance and lifespan of the battery module.

Recommended Clearance:

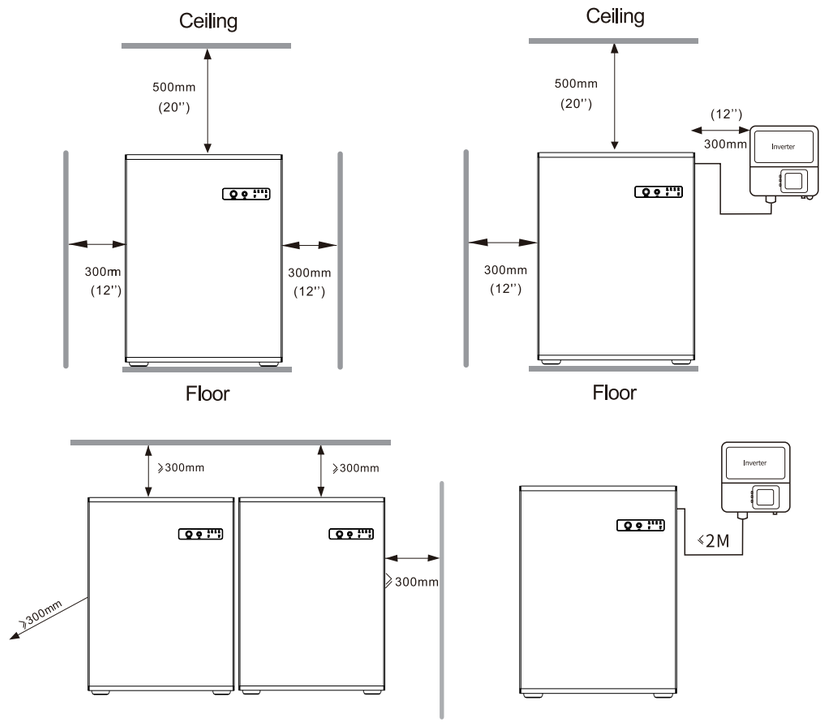

Recommended clearance for the left, right and top of the product is shown in the figure for the proper ventilation and installer convenience.

3.4 Equipment installation

Install the battery system through the following steps:

3.4.1 Wall-mounted installation

Step 1:

- Align the Wall-locking plates horizontally, fix them on the wall at an appropriate height.
- Use an electric drill to drill holes in the wall. Hole diameter: 12 mm; depth: 60 mm.

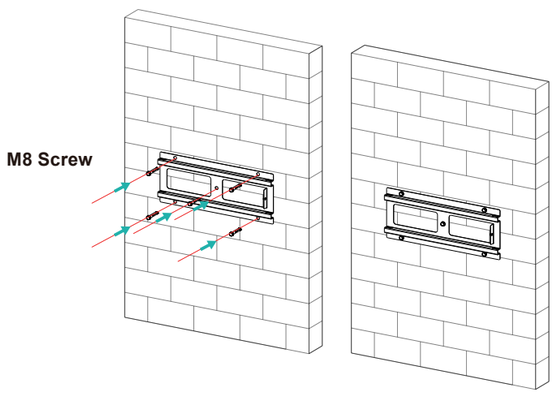

Step 2:

Screw the back plane on the left and right sides of the back of the battery.

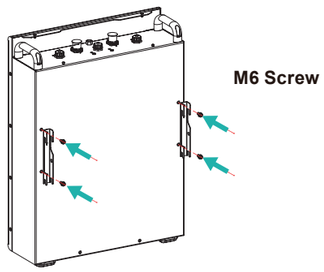

Step 3:

Lift the battery module parallel to the ground.Hang the battery module on the bracket.
Screw the right/left back plane on the wall.

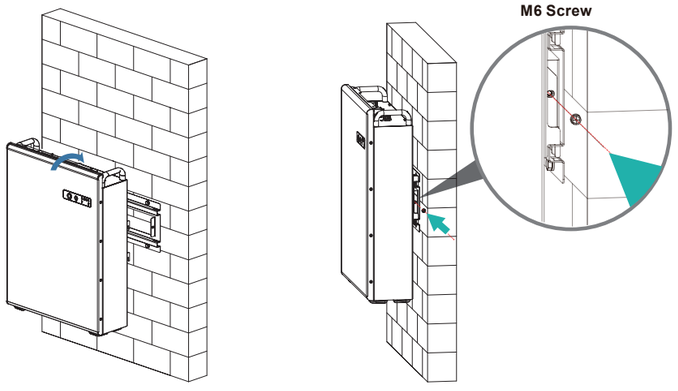

3.4.2 Ground Installation (Optional)

Step 1:

Install the floor-mounted accessories, secure them with M6 Nut , and keep them vertical to the ground, as shown in the figure below.

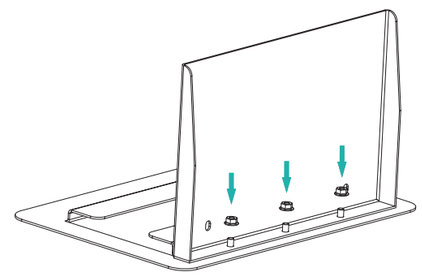

Step 2:

Install the battery pack onto the assembled bracket, align the screw holes on the back of the battery pack with those on the bracket, tighten the screws, installation completed.

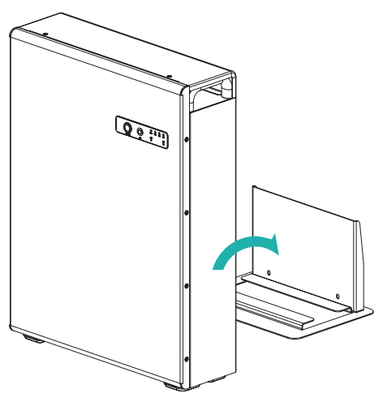

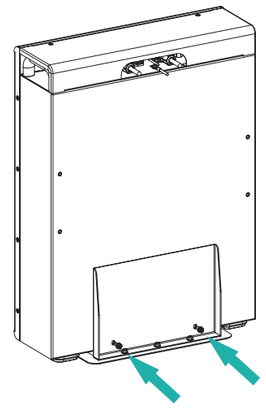

04 Parallel introduction (Optional)

4.1 Battery module capacity description

The battery system supports power and capacity expansion. For parallel operation of more than two battery clusters, a dedicated parallel connection box is required. Up to four battery modules can be connected in parallel.

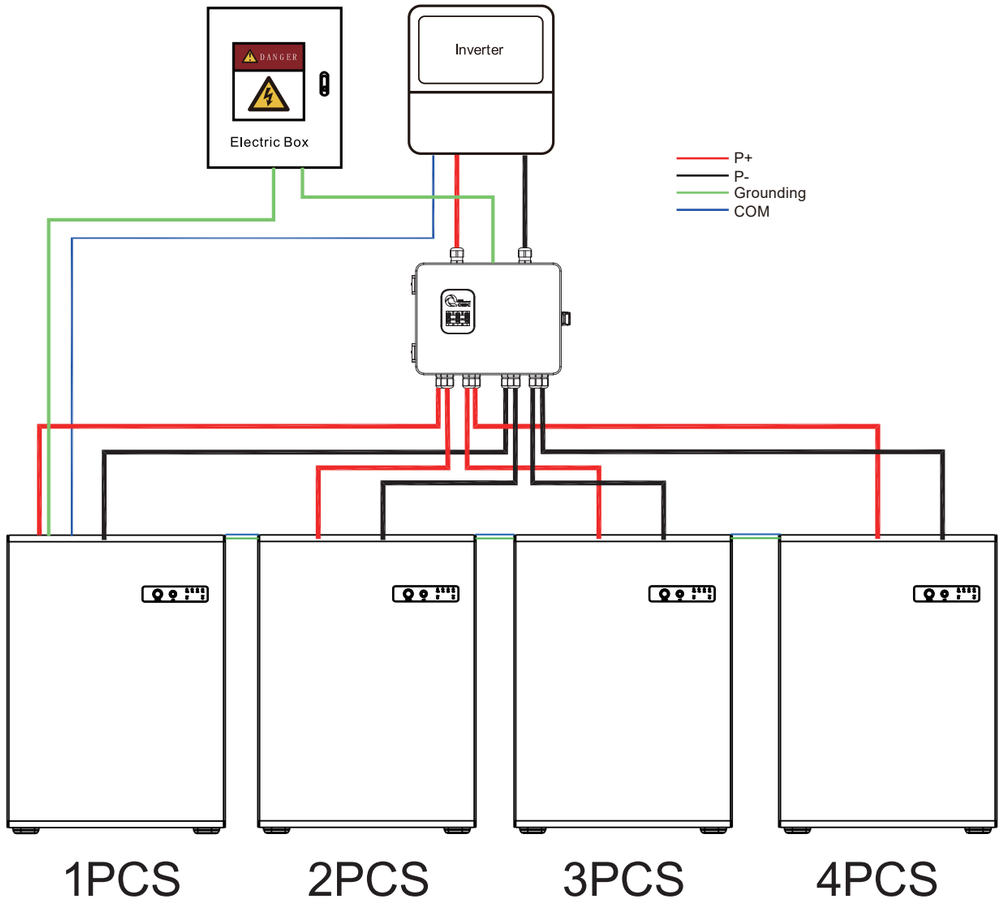

Maximum 4 battery modules in parallel

4.2 Parallel Box overview

The CB-01(optional) supports safe parallel connection of up to 4 clusters, integrating current balance, protection, and communication.

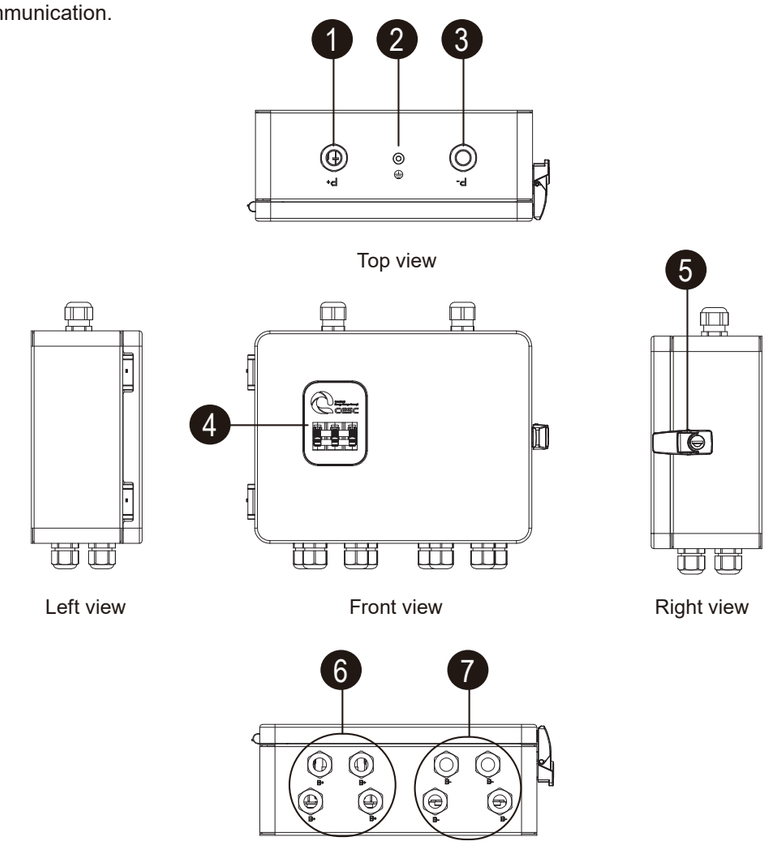

No.	Port Signs	Function Description
1	P+	Power + (Parallel Connection Box to PCS)
2	⏚	Grounding point
3	P-	Power + (Parallel Connection Box to PCS)
4	Switch	Switch on/off the power
5	Lock	Lock/Unlock the box
6	B+	Power + (BAT to parallel connection box)
7	B-	Power - (BAT to parallel connection box)

4.3 Installation contents

The following items are required for CB-01 installation.

Parallel connection box

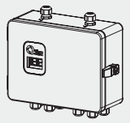

Parallel connection box x1



Wall-locking panel x1



back plane x2



M5X12 Screw x 3



M6X60 Screw x 2

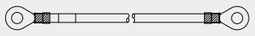

Ground Cable x1

Positive Power Cable
(Red) x1
35mm²

Negative Power Cable
(Black) x1
35mm²

Positive Power Cable
(Red) x1
70 mm²

Negative Power Cable
(Black) x1
70 mm²

4.4 Install the parallel box

Step 1:

Fix two wall-locking plates to the back of the box with screws.

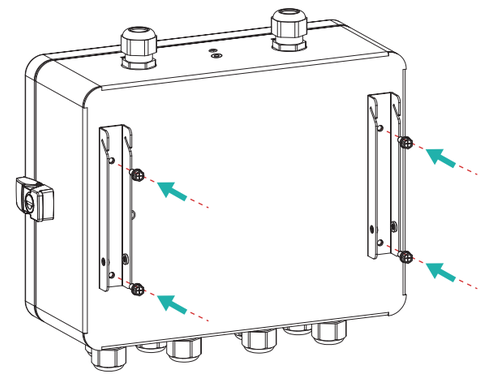

Step 2:

Align the wall-locking plates horizontally, fix them on the wall at an appropriate height with screws, then hang the box onto them.

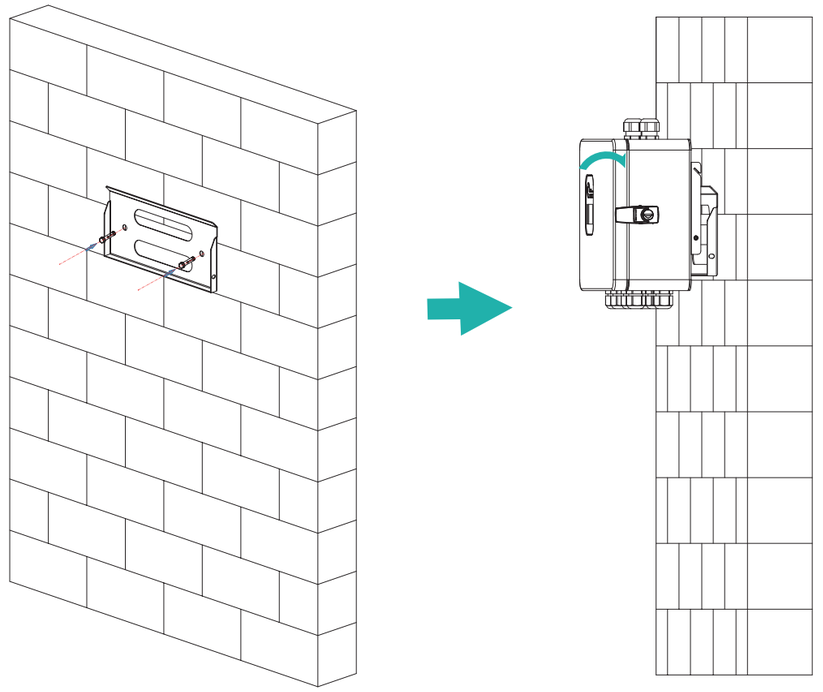

Step 3:
After hanging securely, align the holes on the side of the box with those on the wall-hanging plate, fix them with screws, installation completed.

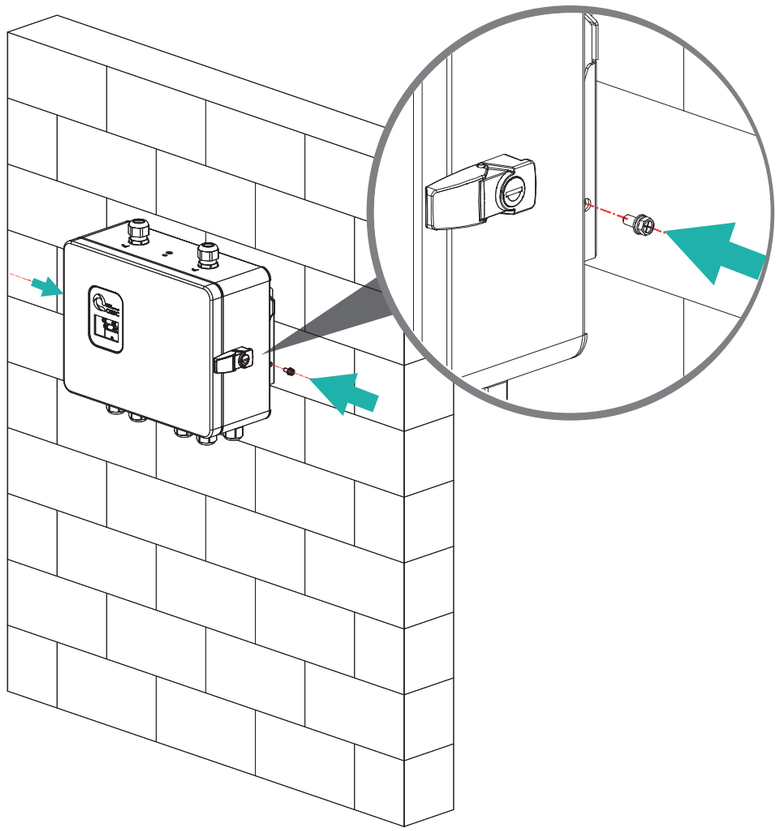

05 Cable connection

5.1 External electrical connection of the battery system

Route all the external cables through the rear of BAT.

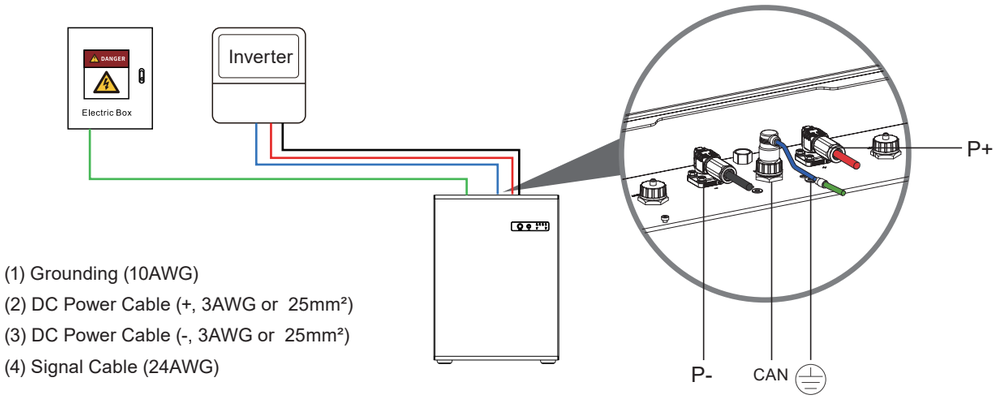

(1) Grounding (10AWG)
(2) DC Power Cable (+, 3AWG or 25mm²)
(3) DC Power Cable (-, 3AWG or 25mm²)
(4) Signal Cable (24AWG)

5.2 Installing an external grounding

Connect the ground point (⏚) of the battery to the external Electric Box.
Otherwise, electric shocks may occur.

⚠ CAUTION

Do not connect the ground point (⏚) of the BAT to the external hybrid inverter.
Otherwise, BMS maybe disturbed and can not work properly.

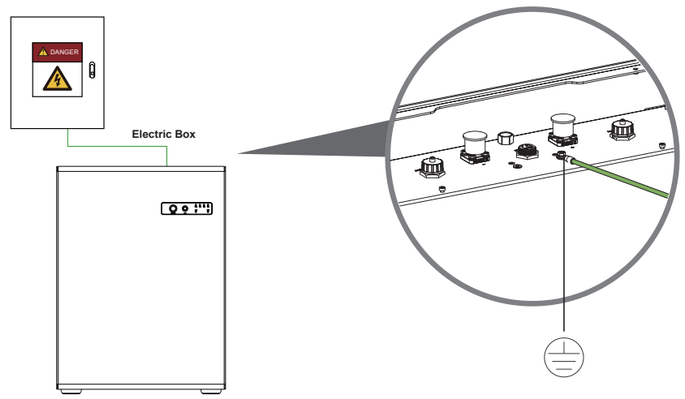

5.3 Installing external DC power cables

Insert the positive and negative battery connectors into the corresponding DC input terminals (P+ and P-). The positive power cable (BAT+) is red and negative power cable (BAT-) is black. Before assembling DC connectors, label the cable polarities to ensure correct cable connections.

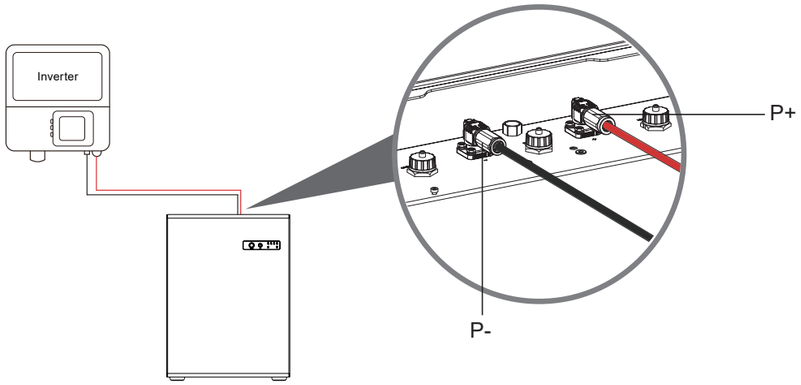

5.4 Installing an external signal cable

Choose signal cable type (CAN cable) based on the Inverter when laying out a signal cable. Separate the Signal Cable from power cables when connecting it between the Battery and the Inverter and keep it away from strong interference sources to prevent communication interruption.

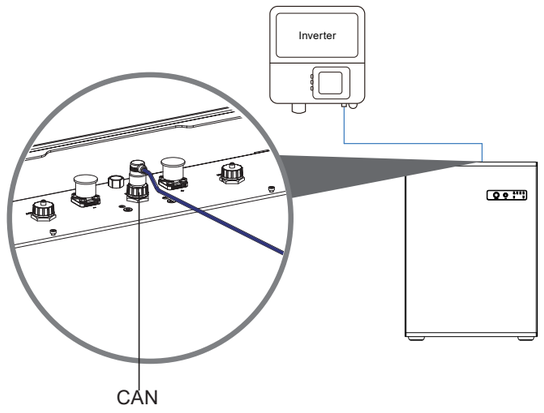

The wiring order of the signal cable is as follows:

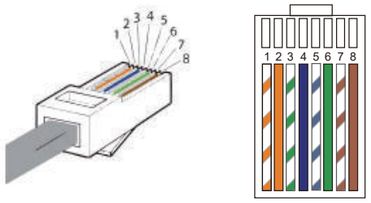

Sequence	Color	CAN
1	White with an orange stripe	NC
2	Orange	NC
3	White with a green stripe	NC
4	Blue	CAN_ H
5	White with a blue stripe	CAN_ L
6	Green	NC
7	White with a brown stripe	NC
8	Brown	NC

5.5 Parallel Wiring Connection (Optional)

When it is necessary to expand the battery capacity, the batteries shall be connected via a parallel box.
Step 1: Connect the ground point (⏚) of the battery and parallel box to the external Electric Box.Otherwise, electric shocks may occur.
Step 2: Connect each battery's power cables to the parallel box, align each cable with the corresponding terminal on the parallel box according to polarity markings,and secure the connections firmly.
Step 3: link the parallel box to the PCS using appropriate power cables, ensuring precise polarity matching at every connection point.
There are two parallel wiring connection methods:

(1) Method 1:

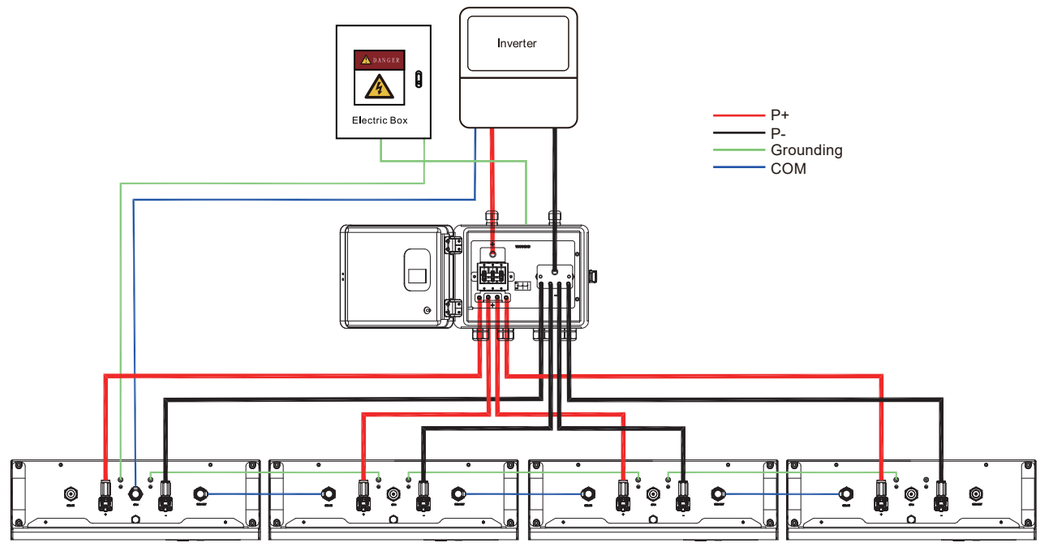

(2) Method 2:

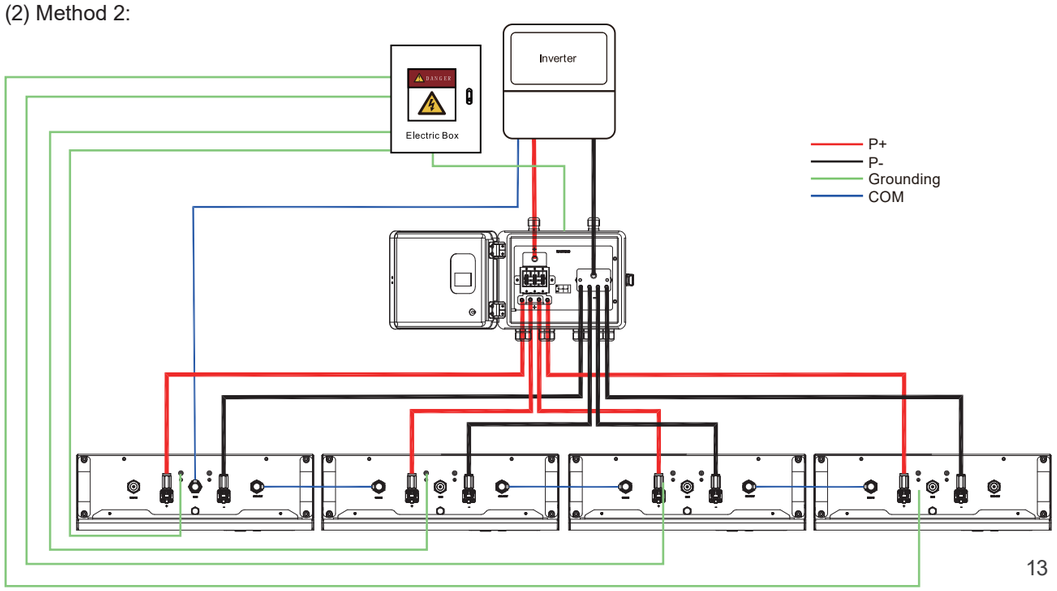

WARNING

Maximum parallel connection: 4 battery clusters.

5.6 Install the cover

(1) After finish the cables connection, lock the cover of the parallel box.

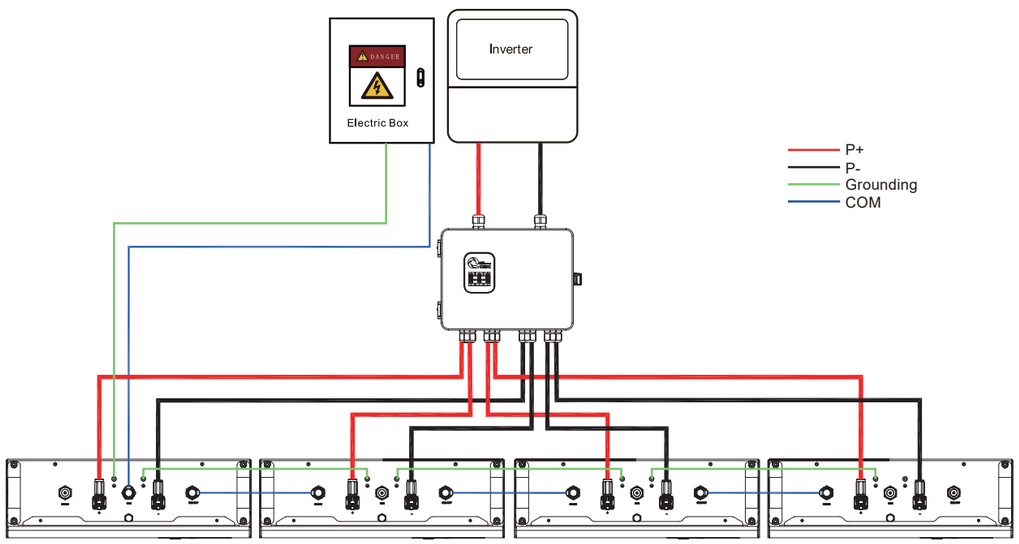

(2) After finish the cables connection, you can assemble the top cover of the battery as below.

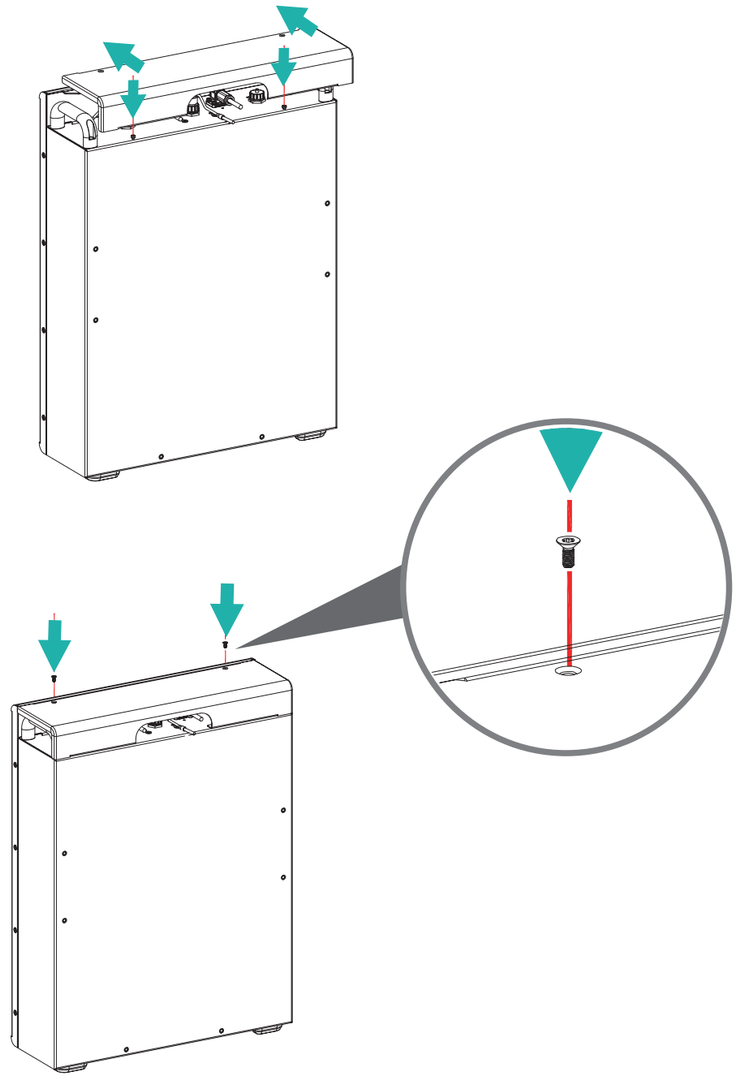

06 System commissioning

6.1 Inspection before power on

Table: Checklist and Acceptance Criteria.

No.	Check Item	Acceptance Criteria
1	Installation	The installation is accurate and secure.
2	Grounding	The Grounding cable is connected correctly and securely.
3	Cable connection	The DC power cables, signal cables and ground cables are connected correctly, and securely.
4	Installation environment	The installation space is proper, and the installation environment is clean and tidy.

6.2 System power on

Power on the system through the following steps:

1. Press the Switch button (SW) on the equipment.
2. The green running LED should normally be ON.
3. If it is failed to switch on the system, check that all the electrical connections are correct.
4. If the electrical connections are correct, but the system is still not able to switch on, contact our after-sale service within 48 hours.

6.3 Power off

Power off the system through the following steps:

1. Turn off the inverter.
2. Press the switch button(SW) to be OFF.
3. Ensure that all LED indicators are OFF and the system has shut down completely.
4. Disconnect all the system wiring.

WARNING

After the system powers off, residual electricity and heat may still pose risks of electric shocks and burns. Therefore, it is advisable to wear protective gloves and wait 5 minutes after the system has powered off before performing any operations on the system.

6.4 LED indicators

NOTE

refers to the LED indicator is off

refers to the LED indicator is on

refers to the LED indicator is blinking

LED Indicator	SOC Indicator	Description
• Red light is off • Green light blinking for 1s • Blue light is displayed as shown in the figure	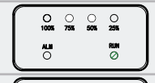	SOC=0%
		0%<SOC<25%
		25%≤SOC<50%
		50%≤SOC<75%
		75%≤SOC≤100%

LED Indicator	LED & SOC Indicator	Fault Description
Green light blinking for 1s Red light on	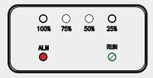	Over voltage
	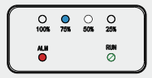	Over current
		Under voltage
	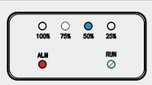	Over temperature

Common errors find troubleshooting measures as follows:

No.	Software Error	LED & SOC Indicator	Troubleshooting
1	Over voltage	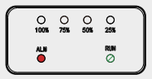	Please contact your dealer or technical support.
2	Under voltage		Please contact your dealer or technical support.
3	Over temperature		Wait till the temperature of cell goes back to the normal state.
4	Under temperature		Wait till the temperature of cell goes back to the normal state.
5	Over current		Please contact your dealer or technical support.
6	Self-test error		Please contact your dealer or technical support.
7	Precharge error		Please contact your dealer or technical support.
8	Relay error		Please contact your dealer or technical support.
9	Communication timeout		Please contact your dealer or technical support.
10	Large differential voltage	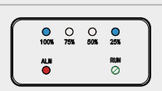	Please contact your dealer or technical support.
11	Large differential temperature		Please contact your dealer or technical support.
12	Reverse connection error		Please contact your dealer or technical support.

No.	Hardware Error	LED & SOC Indicator	Troubleshooting
1	Over voltage		Please contact your dealer or technical support
2	Under voltage		Please contact your dealer or technical support.
3	Over temperature		Wait till the temperature of cell goes back to the normal state.
4	External short circuit		Please contact your dealer or technical support.
5	Over current		Please contact your dealer or technical support.
6	AFE error		Please contact your dealer or technical support.
7	Voltage sensor error		Please contact your dealer or technical support.
8	Temperature sensor error		Please contact your dealer or technical support.
9	Current sensor error		Please contact your dealer or technical support

No.	Associated Address Error	LED & SOC Indicator	Troubleshooting
1	Timeout		Please contact your dealer or technical support.
2	Error		Please contact your dealer or technical support.

07 System maintenance

7.1 Routine maintenance

To ensure that the system can operate properly for a long term, it is recommended to perform routine maintenance according to the description in this chapter.

CAUTION

Power off the system before cleaning the system, connecting cables and ensuring the grounding reliability.

Check Item	Check Method	Maintenance Period
Appearance Status	Check that the battery module is not damaged or deformed.	Once every 6 months
System Running Status	Check that the battery module does not generate abnormal sound when it is in operation.	Once every 6 months
Electrical Connection	Check that cables are secured and intact, in particular, the parts touching the metallic surface are not scratched.	The first inspection is 6 months after the initial commissioning. From then on, the interval can be 6 to 12 months.
Ground Reliability	Check that ground cables are securely connected.	The first inspection is 6 months after the initial commissioning. From then on, the interval can be 6 to 12 months.

08 What to do in case of an emergency

In the event of any threat to health or safety, always begin with these two steps before addressing the other suggestions below:

1. Immediately contact the fire department or other relevant emergency response team.
2. Notify all people who might be affected and ensure that they can evacuate the area.

WARNING

Only perform the suggested actions below if it is safe to do so.

8.1 In case of fire

The battery module may catch fire when heated about 150°C.

1. Press the switch button (SW) to be OFF.
2. Turn off the breaker to the inverter.
3. Acceptable fire extinguisher types are CO_2 and ABC.

8.2 In case of flooding

1. Stay out of the water if any part of the battery module or any wiring is submerged.
2. Press the switch button (SW) to be OFF.
3. Turn off the breaker to the inverter.
4. If possible, protect the system by finding and stopping the source of the water, and pumping water away.
5. Let the area dry completely before use.

8.3 In case of unusual noises

1. Press the switch button (SW) to be OFF.
2. Turn off the breaker to the inverter.
3. Ensure that nothing is inside the case, then restart the system and if there are still unusual noises, please contact your dealer or technical support.

8.4 In case of unusual smell or smoke

1. Please ensure your safety first, then contact your dealer or fire department based on the actual situation to move to the next step.
2. Press the switch button (SW) to be OFF.
3. Turn off the breaker to the inverter.
4. Ensure nothing is in contact with the battery system.