USER MANUAL

Saturn Residential Storage System

MODEL: Saturn LV5-03
Lithium-ion Battery



(研发版本 - 非最终规格 /Research and Development Version-Not Final Specifications)

Contents

01	**Safety**	**02**
1.1	Safety instructions	02
1.2	Symbols in this document	02
1.3	Qualified personnel	02
1.4	Equipment requirements	03
1.5	Electrical requirements	03
1.6	Installation requirements	03
1.7	Environment requirements	04
1.8	Symbols explanation	05
02	**Product introduction**	**07**
2.1	Appearance	07
2.2	Dimension and weight	08
2.2.1	Break box	09
2.2.2	Battery module	11
2.3	Battery system specifications	12
2.4	Performance	13
2.5	Labels	13
2.5.1	Labels overview	13
03	**Installation instructions**	**14**
3.1	Installation contents	14
3.2	Tools & Instruments prepared (not supplied)	15
3.3	Installation location and clearance	15
3.4	Equipment installation	17
04	**Cable connection**	**22**
4.1	External electrical connection of the battery system	22
4.2	Installing an external grounding	23
4.3	Installing external DC power cables	23
4.4	Installing an external signal cable	24
4.5	Assembling baffle to break box	24
4.6	Parallel connection of batteries	25
05	**System commissioning**	**26**
5.1	Inspection before power on	26
5.2	System power on	26
5.3	System power on	26
5.4	LED indicators	26
06	**System maintenance**	**27**
6.1	Routine maintenance	27
6.2	Troubleshooting	28
07	**What to do in case of an emergency**	**30**
7.1	In case of fire	30
7.2	In case of flooding	30
7.3	In case of unusual noises	30
7.4	In case of unusual smell or smoke	30

All information in this manual is subject to copyright and other intellectual property rights of CESC New Energy Technology Co., Ltd. This manual should not be modified, reproduced or copied, in whole or in part. The unauthorized use without prior written permission is strictly prohibited. CESC New Energy Technology Co., Ltd. All rights reserved.

Please read this entire document carefully before installing or using the battery system. Failure to do so or to follow any of the instructions or warnings in this document can result in electrical shock, serious injury or death, can damage battery, potentially rendering it inoperable. Warranty claims are invalid, if damage is caused by human error in a manner inconsistent with the installation manual's instructions.

The information included in this manual is verified by CESC to be accurate at the time of publication. However, due to the continuous improvement of products, this manual is subject to change without prior notice.Unless otherwise specified, this manual is for operational guidance only, and all statements contained herein do not constitute any form of warranty.

The illustrations in this manual are intended to help explain operating system configurations and installation instructions. Any confusion, please contact CESC immediately for advice and clarification. Thank you for your choice and trust.

Saturn LV5-03

01 Safety

1.1 Safety instructions

For safety reasons, please read this entire manual before installing, servicing or using. Failure to comply with the instructions can result in electrical shock, serious injury, death or can damage the battery, potentially rendering it inoperable.

1.2 Symbols Definitions

This manual uses the following symbols to highlight essential information:

DANGER
Indicates a hazard with a high level of risk which, if not avoided, will result in death or serious injury.
WARNING
Indicates a hazard with a medium level of risk which, if not avoided, could result in death or serious injury.
CAUTION
Indicates a hazard with a low level of risk which, if not avoided, could result in minor or moderate injury.
NOTICE
NOTICE indicates a situation which, if not avoided, can result in property damage.
NOTE
Provides tips for the optimal operation of the product.

1.3 Qualified personnel

The equipment installation and maintenance must be carried out only by certified installers who possess all following qualifications and experience:

- Knowledge of the installation of electrical devices.
- Knowledge of the functional principles and operation of on-grid and off-grid systems.
- Knowledge of the dangers and risks associated with installing and using electrical devices and acceptable mitigation methods.
- Knowledge of and adherence to this manual and all safety precautions and best practices.
- Knowledge of the protective measures to minimize hazards to themselves and others.

1.4 Equipment requirements

If the equipment seems to be damaged, pack it in its original container, and then return it to your distributor.

- Do not damage the equipment.
- Do not use water to clean electrical components inside or outside of the equipment.
- Do not stand on, lean on, or sit on the top of the equipment.
- Repair any paint scratches caused during battery module transportation or installation in a timely manner.
- Equipment with scratches cannot be exposed to an outdoor environment for a long period of time.

1.5 Electrical requirements

- Ensure that the power setting matches the rated input of this power supply.
- Make sure to connect the protective grounding to prevent an electric shock before activating the power.
- Never sever the internal or external protective grounding wire, or disconnect the wiring of protective grounding terminal. Such actions can create a shock hazard, potentially causing injury.
- Do not connect the battery module directly to photo-voltaic (PV) solar wiring.
- Do not short-circuit the wiring terminals of the battery module. Short circuits can cause a fire hazard.

DANGER

Before connecting cables, ensure that the equipment is intact. Otherwise, electric shocks or fire hazards may occur.

1.6 Installation requirements

- Understand the components and functioning of a grid-tied PV power system and relevant local standards.
- Do not install, use, or operate outdoor equipment and cables in harsh weather conditions such as lightning, rain, snow, and level 6 or stronger wind.
- Wear proper personal protective equipment (PPE) during operation. If there is a probability of personal injury or equipment damage, immediately stop the operations, report the case to the supervisor, and take feasible protective measures.
- Tighten screws using tools when installing the battery module.
- To prevent fire due to high temperature, ensure that the ventilation vents of the heat dissipation system are not blocked when the battery is running.
- After installing the equipment, remove idle packing materials such as cartons, foam, plastics and cable ties from the equipment area.

Saturn LV5-03

DANGER

Do not work with live electricity during installation and equipment operation.

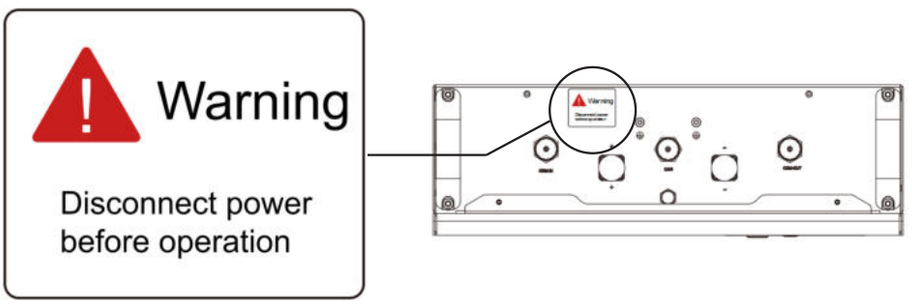

Example Product: Saturn LV5-02 (Top View)

WARNING

It is not recommended to connect a circuit breaker or isolating switch, especially an AC circuit breaker, between the battery and the inverter connection line. If a DC circuit breaker or isolating switch must be connected in series, it needs to be closed before starting the battery; otherwise, there is a risk of battery damage or potential electric shock.

1.7 Environment requirements

Operating Temperature	Optional: Charge: 0°C - 50°C/Discharge: -20°C - 50°C(without heating film) Charge: -20°C - 50°C/Discharge: -20°C - 50°C(with heating film)
Humidity	≤95%
Storage < =6 months	Stage of Energy (SOE): 50% initial
Maximum Altitude	Max. 3000m (9842 ft)

- Install the equipment in a dry and well-ventilated environment to ensure good heat dissipation.
- Install the equipment in a sheltered place or install an awning over it.
- Install the equipment at a height that prevents damage from flooding.
- Avoid exposing the equipment module to direct sunlight or water.
- Do not install the equipment near heating equipment.
- Do not place any flammable or explosive materials around the equipment.
- Do not subject the equipment to high pressures.
- Do not place any objects on top of the equipment.
- Do not expose the equipment to ambient temperatures above 60°C (140°F) or below -30°C (-22°F).
- Children are not allowed to enter the installation position.
- Operating or storing the equipment in temperatures outside its specified range might cause damage to the equipment.
- Ensure that there is minimal dust and dirt in the area.
- Ensure that no water sources are above or near the equipment, including downspouts, sprinklers, or faucets.
- The equipment site must be equipped with qualified fire extinguishing facilities, such as fire extinguishing sands and powder fire extinguishers.

NOTICE

The recommended operating temperature ranges from 15°C to 30°C.

1.8 Symbols explanation

Symbol	Explanation
	Beware of a danger zone This symbol indicates that the product must be additionally grounded if additional grounding or equipotential bonding is required at the installation site.
	Beware of electrical voltage The product operates at high voltages.
	Beware of hot surface The product can get hot during operation.
	Danger to life due to high voltages in the inverter, observe a waiting time of 5 minutes. Prior to performing any work on the inverter, dis-connect it from all voltage sources as described in this document.
	WEEE designation Do not dispose of the product together with the household waste but in accordance with the disposal regulations for electronic waste applicable at the installation site.
	Observe the documentation.
	CE marking The product complies with the requirements of the applicable EU directives.
	Certified safety The product is TUV-tested and complies with the requirements of the EU Equipment and Product Safety Act.
	RCM (Regulatory Compliance Mark) The product complies with the requirements of the applicable Australian standards.
	UKCA marking The product complies with the regulations of the applicable laws of England, Wales and Scotland.
	RoHS labeling The product complies with the requirements of the applicable EU directives.
	Risk of chemical burns.
	Risk of explosion.

Saturn LV5-03

Symbol	Explanation
	Risk of electrolyte leakage.
	Refer to the instruction for operation.
	Use eye protection.
	Fire, naked light and smoking prohibited.
	No nearing.
	Do not dispose of the battery pack together with the household waste but in accordance with the locally applicable disposal regulations for batteries.
	Recycling code.
UN38.3	Marking for transport of dangerous goods The product passes the certifications of the UN38.3.

6

02 Product introduction

2.1 Appearance

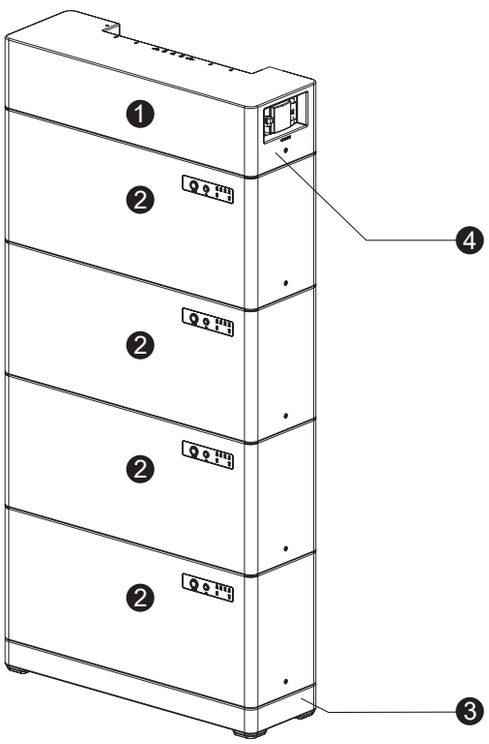

1 Break Box (BB)

2 Battery Modules

3 Installation Base

4 LED-Indicator

NOTE

This manual will show you the installation and cable connection of a Battery System consists of 4 Battery Modules.

Saturn LV5-03

2.2 Dimension and weight

- Break Box (BB) is an electronic system to control battery modules.
- Battery Module is the residential battery which can be charged, discharged into a load.
- Base is a SPCC bottom to make the battery module and BB stable on the floor.
- The Battery System includes the Break Box, Battery Modules and the Base.

Break Box **W*D*H:** 740*240*170mm
Weight: 11.5KG

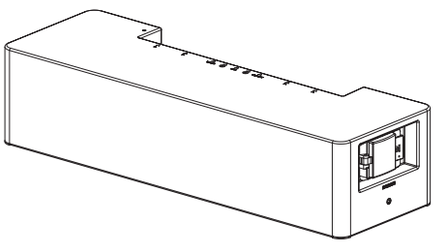

Battery Module **W*D*H:** 740*240*320mm
Weight: 50.5KG

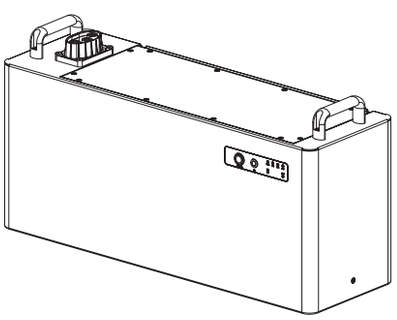

Base **W*D*H:** 740*240*75mm
Weight: 5.5KG

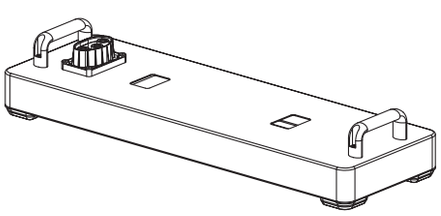

Battery System **W*D*H:** 740*240*1525mm
Weight: 233KG



2.2.1 Break Box

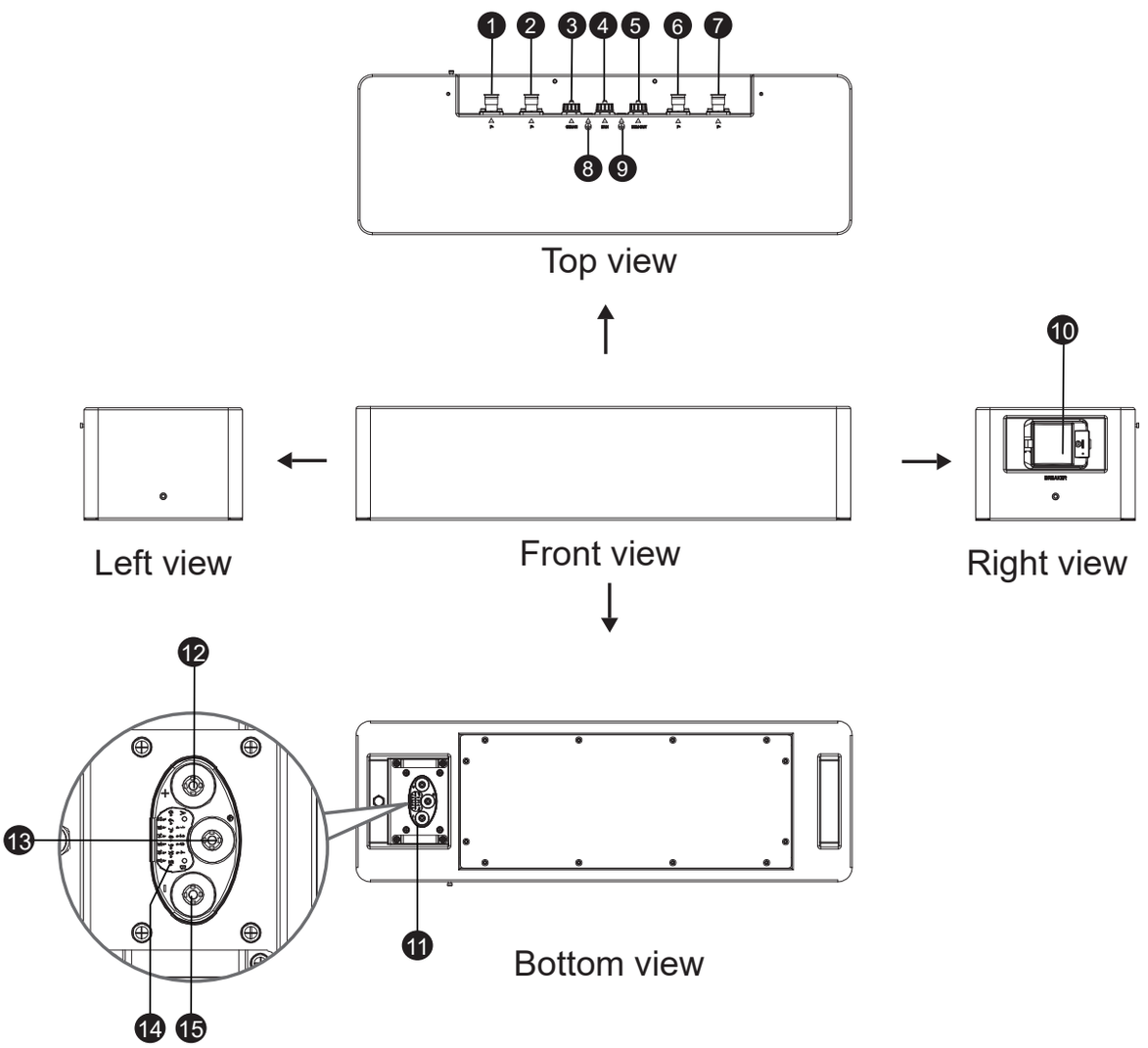

Saturn LV5-03

No.	Port Signs	Function Description
1	P-	Power - (BB to PCS, Connect to P- of next BCU)
2	P-	Power - (BB to PCS, Connect to P- of next BCU)
3	COM-IN	COM cable port (Connect to COM-OUT of last BB)
4	CAN	CAN cable port (BB to PCS)
5	COM-OUT	Com cable port (Connect to COM-IN of next BB)
6	P+	Power +(BB to PCS, Connect to P+ of next BCU)
7	P+	Power +(BB to PCS, Connect to P+ of next BCU)
8	⏚	Grounding Point(BB to PCS,Connect to ⏚ of last BB)
9	⏚	Grounding Point (Connect to ⏚ of next BB)
10	Breaker	Disconnect the battery pack from the PCS when the voltage or current of the battery pack is abnormal.
11	Composite connector-Male	Power +/- and communication port (BB to BAT)
12	B+	Power + (BB to BAT)
13	⏚	Grounding Point (BB to BAT)
14	COM-OUT	Com cable port (BB to BAT)
15	B-	Power - (BB to BAT)

2.2.2 Battery Module

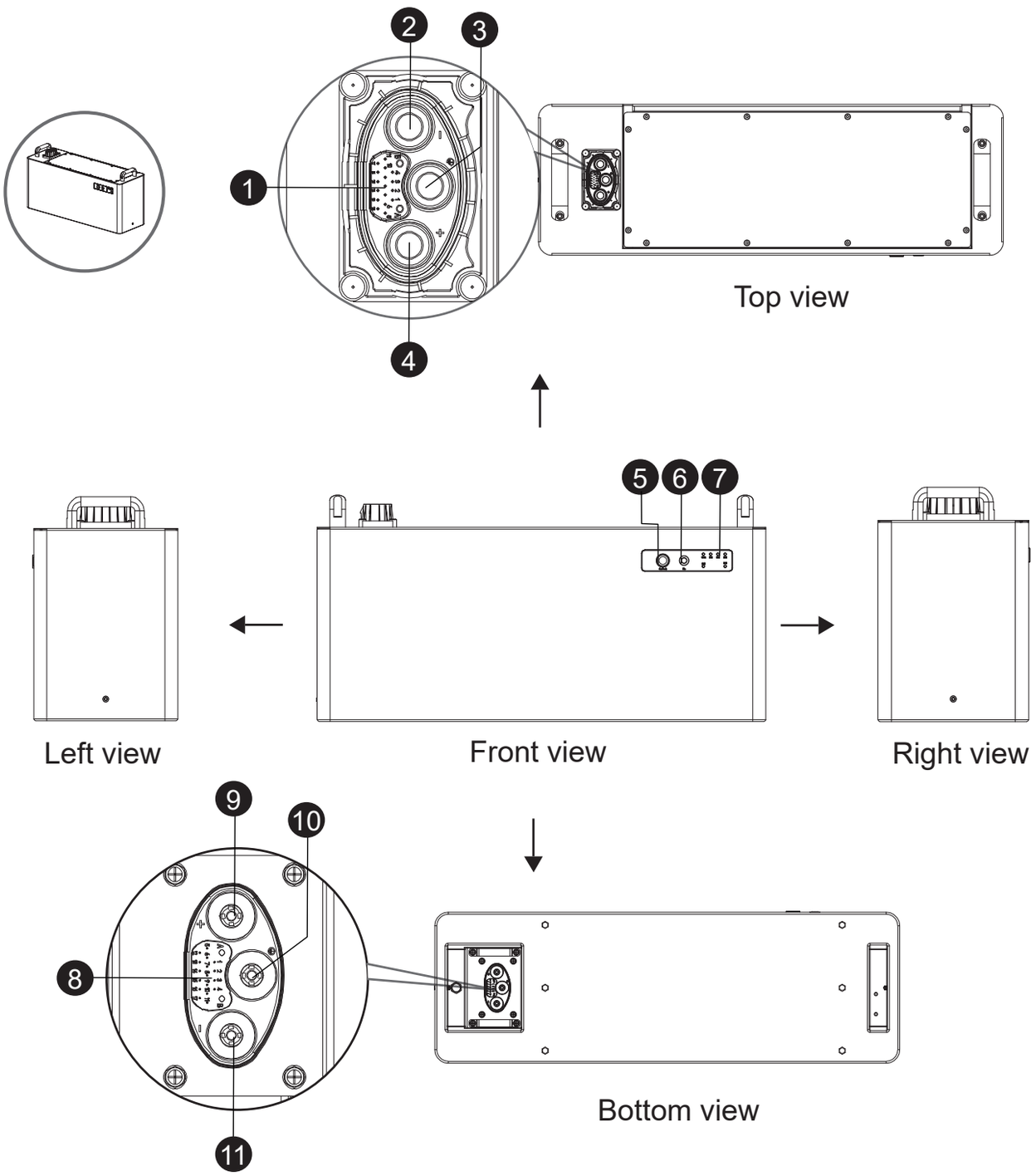

Saturn LV5-03

No.	Port Signs	Function Description
1	COM-IN	COM cable port (BB to BAT, BAT to BAT)
2	B-	Power - (BB to BAT, BAT to BAT)
3	⏚	Grounding point (BB to BAT, BAT to BAT)
4	B+	Power + (BB to BAT, BAT to BAT)
5	Switch	Switch on/off the battery system
6	Fn	Function button
7	LED	Indicates the battery system status, running green light, warning red light
8	COM-OUT	Com cable port (BAT to BAT)
9	B+	Power + (BAT to BAT)
10	⏚	Grounding point (BAT to BAT)
11	B-	Power - (BAT to BAT)

2.3 Battery system specifications

Saturn LV5-03 SYS Configuration List

Battery System Type	Saturn LV5-03	2*Saturn LV5-03	3*Saturn LV5-03	4*Saturn LV5-03
Nominal Energy [kWh]	5.12	10.24	15.36	20.48
Battery Module	51.2V 5.12kWh			
Number of Modules	1	2	3	4
Cell Type	LFP ($LiFePO_4$)			
Nominal Voltage [V]	51.2			
Operating Voltage Range [V]	40-58.4			
Max. Charge / Discharge Current [A]	100	200	260	260
Continue Discharge Output [kW]	5.12	10.24	13.312	13.312
Dimension [W/D/H. mm]	740*240*565	740*240*885	740*240*1205	740*240*1525
Approximate Weight [KG]	67	119	171	223

2.4 Performance

Recommended max. Depth of Discharge	90%
LED Indicator	4 LED (SOC: 25%~SOC:100% blue), 2 LED (working green, alarming red)
IP Rating of Enclosure	IP65(outdoor)
Operating Temperature	Optional: Charge: 0°C - 50°C/Discharge: -20°C - 50°C(without heating film) Charge: -20°C - 50°C/Discharge: -20°C - 50°C(with heating film)
Storage Temperature	0°C~35°C
Humidity	≤95%
Altitude	≤3000m
Cycle Life	10 + years, ≥6000 cycles (70% EOL ,80% DOD, 25 °C)
Installation	Floor-Mounted， Stack
Communication Port	CAN
Certification	UN38.3, EMC

[1] DC Usable Energy, test conditions: 90% DOD, 1C charge & discharge at 25°C. System usable energy may vary due to system configuration parameters.
[2] The current is affected by temperature and SOC.

2.5 Labels

2.5.1 Labels overview



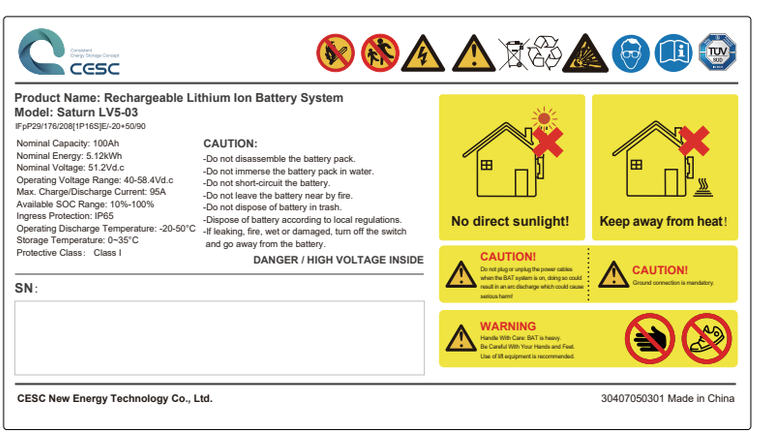

Saturn LV5-03

03 Installation instructions

3.1 Installation contents

The following items are required for BB installation.

Break Box

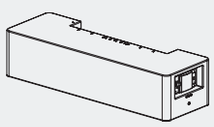 Break Box x 1	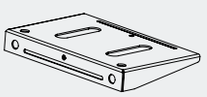 Panel x 1	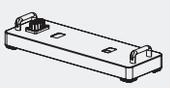 Battery Base x 1	 CAN COM Cable (BB-PCS) x 1*
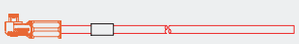 Positive power cable (Red) (BB-PCS) x 1* 50mm^2,1500mm	 Negative Power Cable (Black) (BB-PCS) x 1* 50mm^2,1500mm	 Positive power cable (Red) (BB-PCS) x 1* 70mm^2,1500mm	 Negative Power Cable (Black) (BB-PCS) x 1* 70mm^2,1500mm
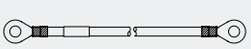 Ground Cable (BB-PCS) x 1* 6AWG,1500mm	 CAN COM Cable (BB-BB) x 1* 24AWG,1370mm	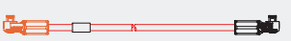 Positive power cable (Red) (BB-BB) x 1* 70mm²,1400mm	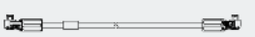 Negative Power Cable (Black) (BB-BB) x 1* 70mm²,1400mm
 Positive power cable (Red) (BB-BB) x 1* 50mm²,1400mm	 Negative Power Cable (Black) (BB-BB) x 1* 50mm²,1400mm	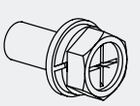 M5 Screw x 4	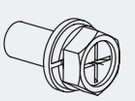 M6 Screw x 3
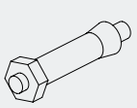 M8 Screw x 4	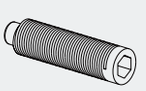 Ball Plunger x 2	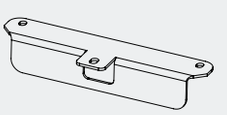 Locking Bracket x 1	 Baffle x 1

*Stands for optional item according to demand.

The following items are required for Battery Module Installation.

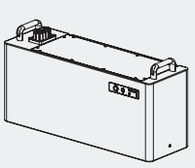
Battery Module x 1

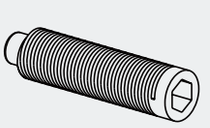
Ball Plunger x 2

3.2 Tools & Instruments prepared (not supplied)

The following tools shall be prepared before installation.

No.	Tool	Tool Name	Remarks
1		Driller	Drill holes on the wall
2		Wrench Set	Turn the screws
3		Screwdriver	Turn the screws
4		Marker	Mark the drilling hole positions on the wall
5		Safety gloves	Protect the hand

WARNING

The battery modules are heavy. Wear appropriate personal protective equipment (such as gloves and safety shoes) when handling the unit. Only a sufficient number of trained movers should lift the battery modules. The use of lift equipment is recommended.

3.3 Installation location and clearance

Installation location requirements:

- There must be not highly flammable or explosive materials nearby.
- The ambient temperature should be within the range of -20°C to 50°C (-4°F to 122°F).
- The battery module must be installed on flat leveled ground that can support its weight.
- Product shall be installed indoors (e.g. in a basement or a garage) or outdoors under an eave out of direct sunlight.

Saturn LV5-03

Recommendations:

- The building should be designed to withstand earthquakes.
- The area should be waterproof and properly ventilated (IP65).
- The product should be installed out of reach of children and animals.

CAUTION

If the ambient temperature is outside the operating range, the battery module will stop operating to protect itself. The optional temperature range for the battery module to operate is from 15°C to 30 °C (59°F to 86°F). Frequent exposure to harsh temperatures may deteriorate the performance and lifespan of the battery module.

Clearance:

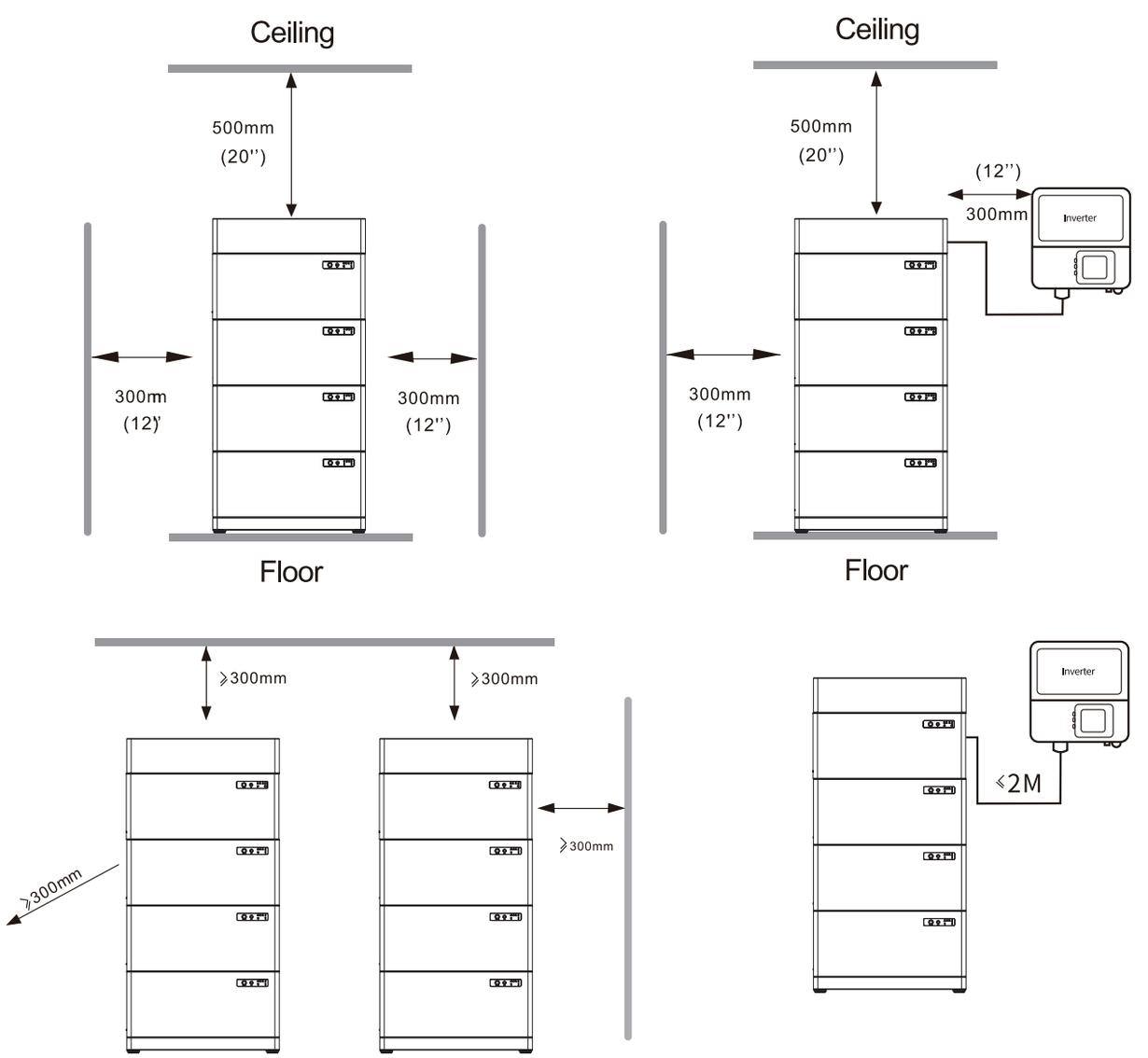

Recommended clearance for the left, right and top of the product is shown in the figure for the proper ventilation and installer convenience.

3.4 Equipment installation

Step 1: Install the base

For Base,you have three optional assembly methods
Method1: Without installing the feet, directly hit the expansion bolts.
Method2: Install foot mats.
Method3: Optional installation of adjustable foot cups (Self-purchase as per customer's requirement).

Step 1:

- Lie the base flat on the floor horizontally.
- Align the installation base with the wall and keep 32mm away from the brick wall, or 150mm away from the wooden wall.
- Mark the drilling hole positions using a marker on the floor.
- Then drill the hole and install the base with M8 expansion bolts.
- Hole diameter 12mm and depth 60mm. Fix the M8 Expansion bolts, tightening torque: 20N.m.

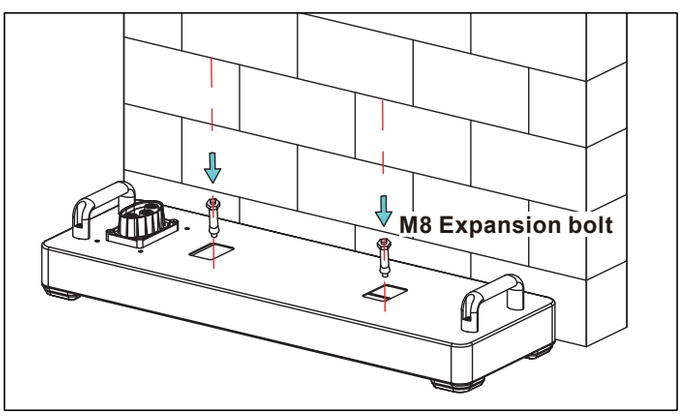

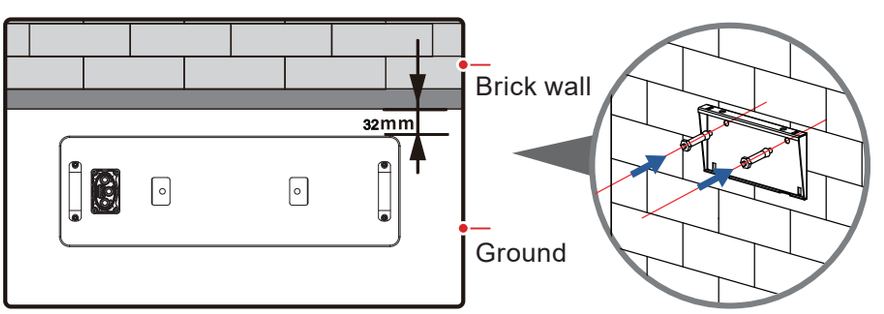

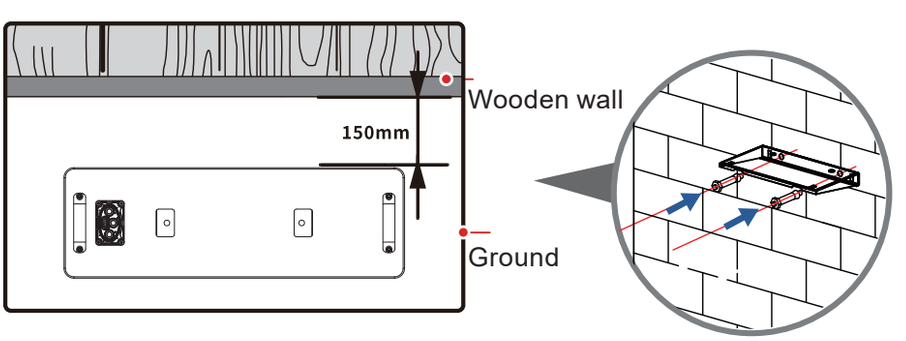

Saturn LV5-03

Method 2 :

- Step1:Tighten transfer nuts with Slotted screwdriver.
- Step2:Place plastic stands.
- Step3:Tighten Hexagon socket head cap screws by Allen wrench.
- Step4:Stick antiskid rubber pads to the surface.

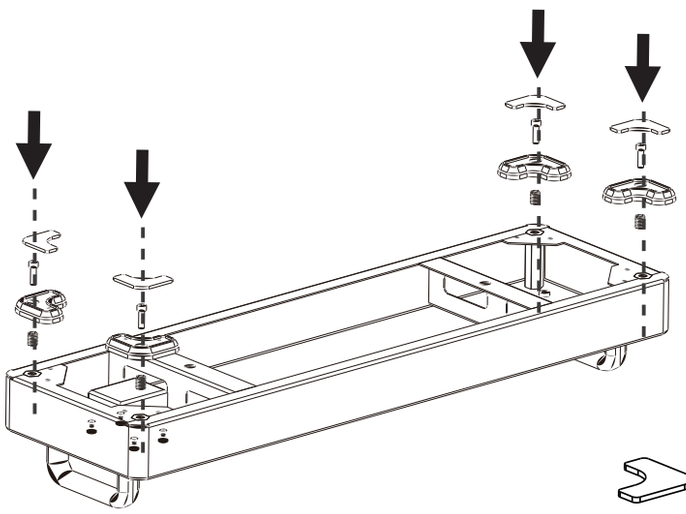

Base

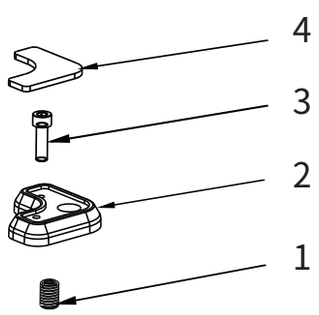

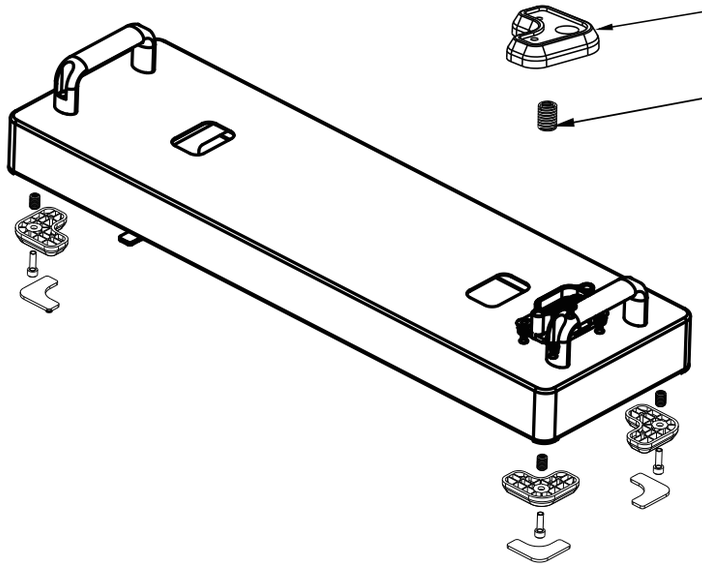

Base

Method 3 :
If you do not use expansion screws to fix the base or install plastic feet, you can choose the right size of M10 foot cups to be installed on the bottom of the base as needed to fine-tune the battery.

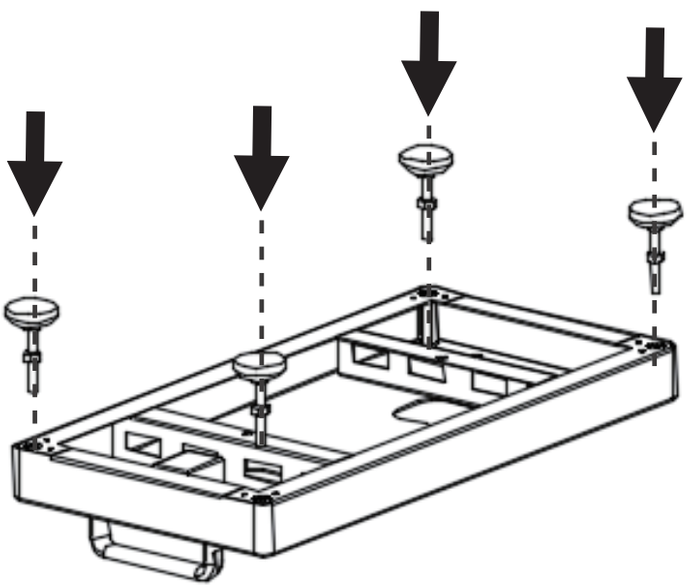

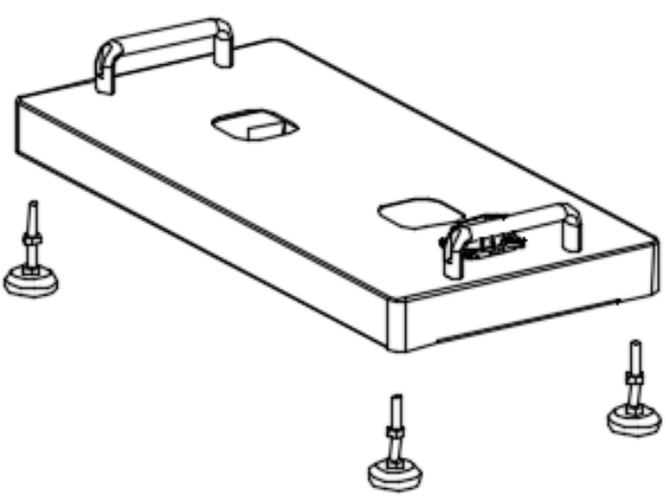

Saturn LV5-03

Step 2:
Place the first battery module on the base.

⚠ CAUTION
Place the battery module or BB at both ends on the base. Otherwise the composite connector pins will be damaged and the battery system cannot run.

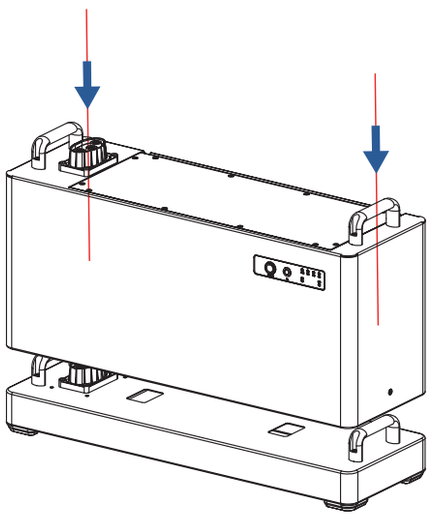

Step 3:

Install the second battery expansion module, the third and the fourth battery expansion module.

⚠ CAUTION
Place the battery module and BB both ends down. Otherwise the composite connector pins will be damaged, and battery system cannot run.

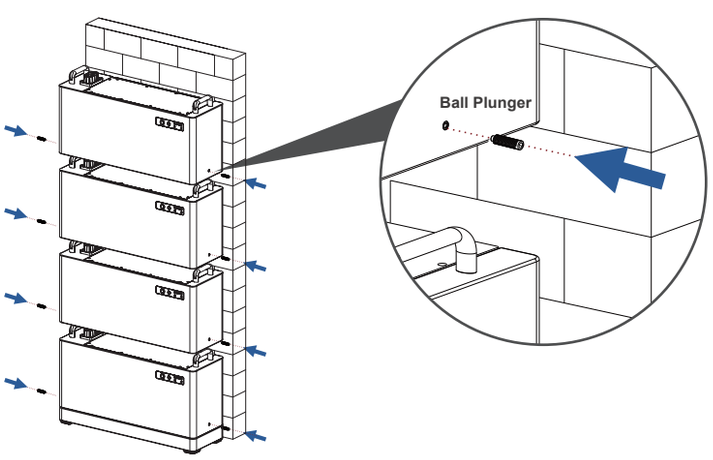

20

Step 4:

- Put the fixing catch behind the BB into Locking Bracket, and get them to battery module to get right positions for Locking Bracket on the wall.
- Mark the drilling hole positions with a marker on the wall.
- After the device has been protected from dust, drill the hole and install the bracket with M8 expansion bolts.

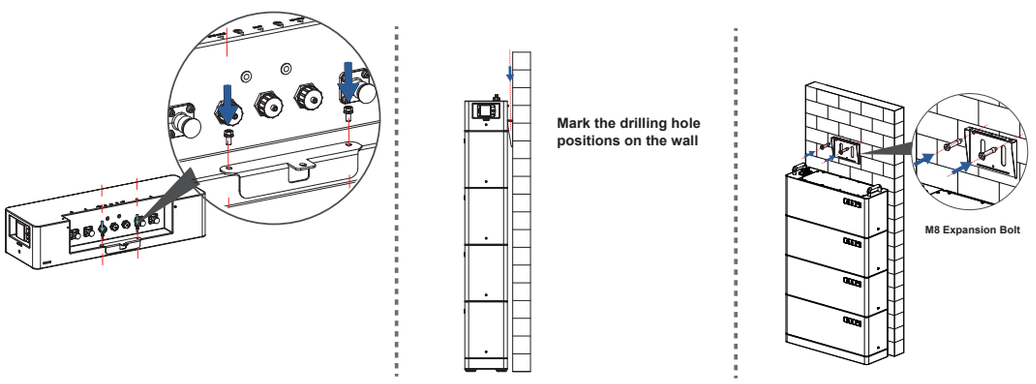

- Hole diameter 12mm and depth 60mm. Fix the M8 Expansion bolts, tightening torque: 20N.m.
- There are two ways to fix the locking bracket.

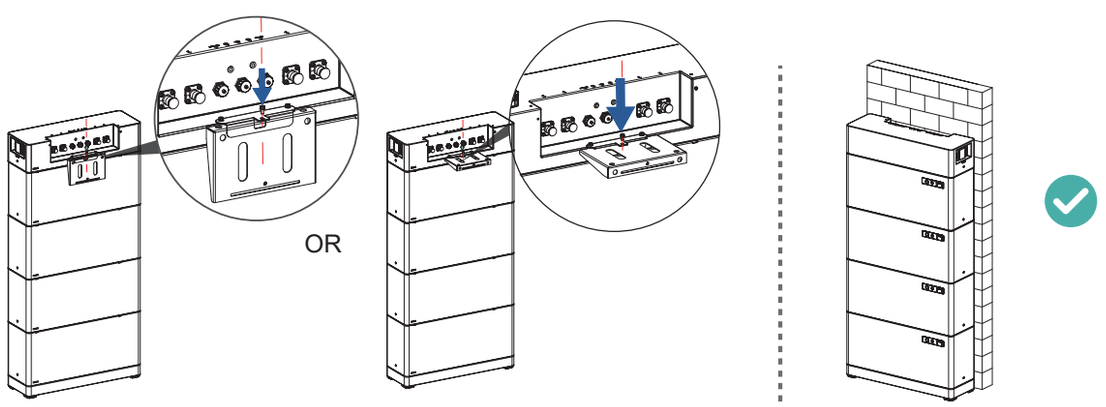

To brick wall **To wooden wall**

Saturn LV5-03

04 Cable connection

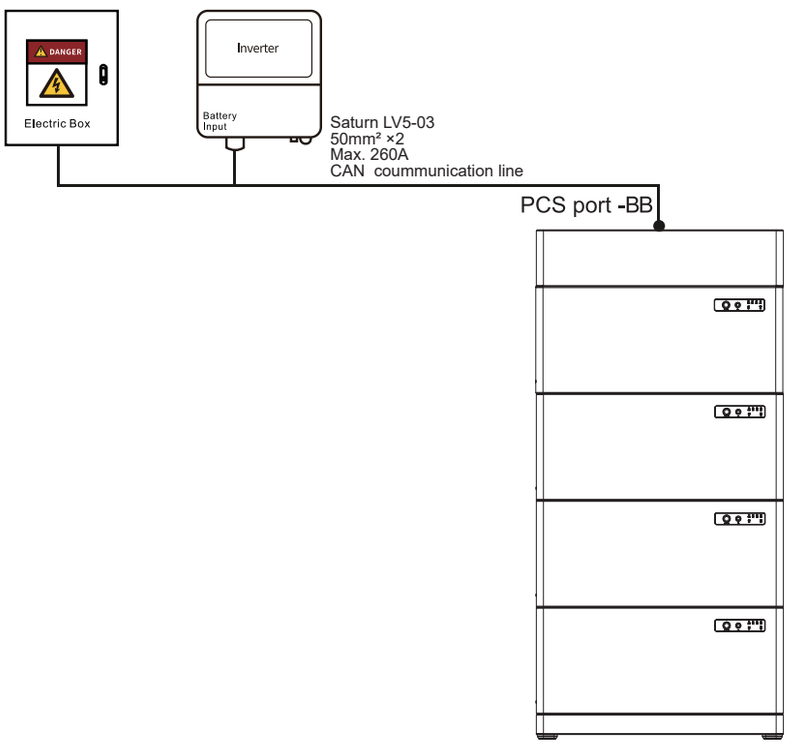

4.1 External electrical connection of the battery system

Route all the external cables through the rear of BB.

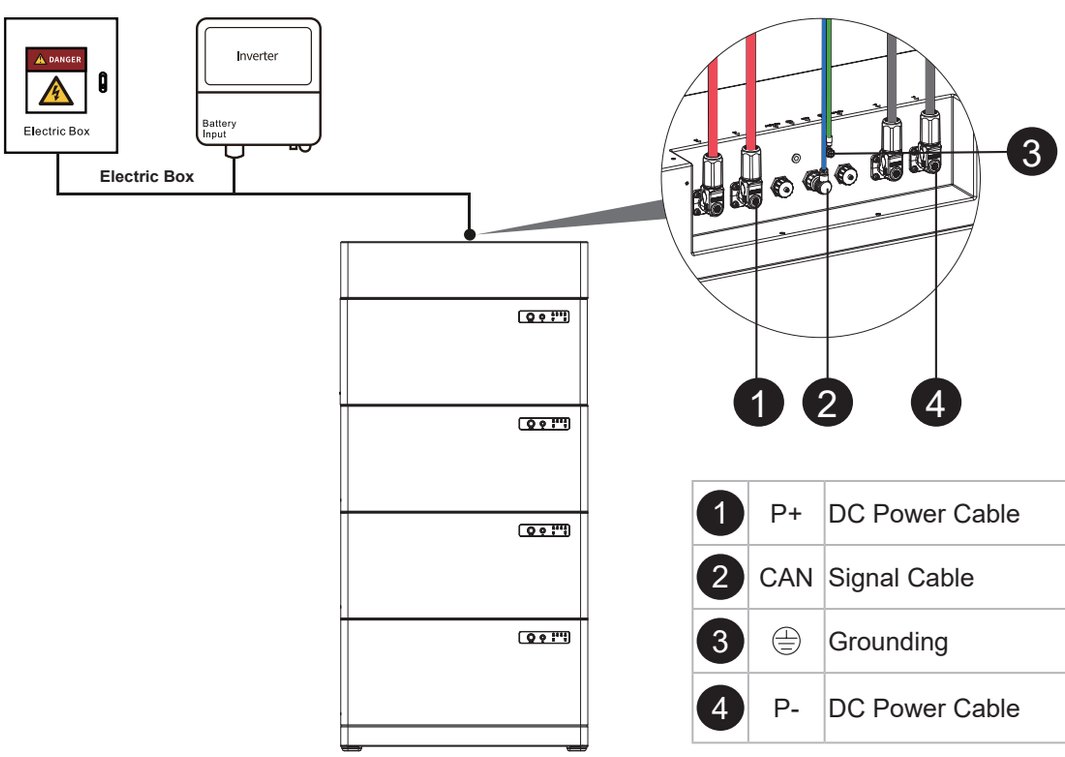

1	P+	DC Power Cable
2	CAN	Signal Cable
3	⏚	Grounding
4	P-	DC Power Cable

4.2 Installing an external grounding

Connect the ground point (⏚) of the cabinet to the external Electric Box. Otherwise, electric shocks may occur.

⚠ CAUTION
Do not connect the ground point (⏚) of the BB to the external hybrid inverter. Otherwise, BMS maybe disturbed and can not work properly.

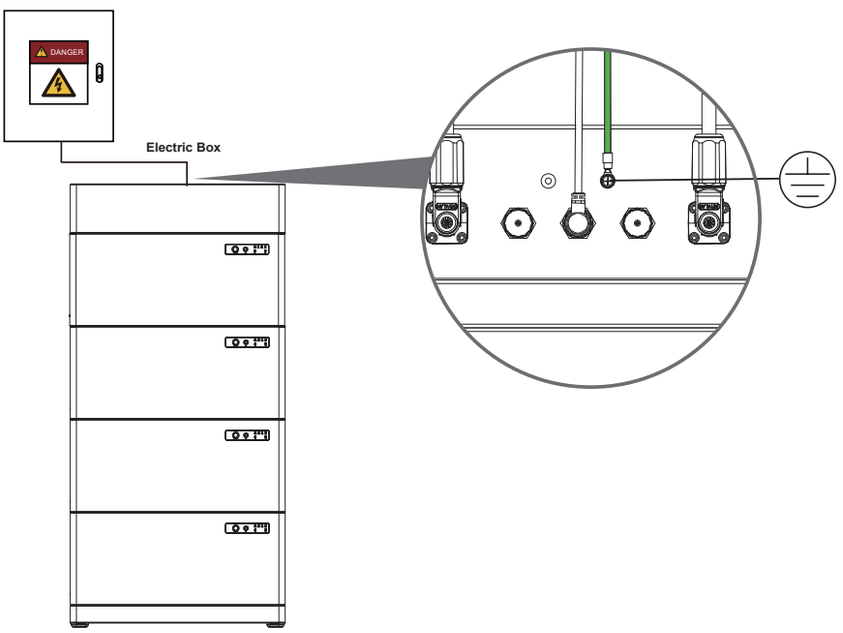

4.3 Installing external DC power cables

Insert the positive and negative battery connectors into the corresponding DC input terminals (P+ and P-). The positive power cable (BAT+) is red and negative power cable (BAT-) is black. Before assembling DC connectors, label the cable polarities correctly to ensure correct cable connections.

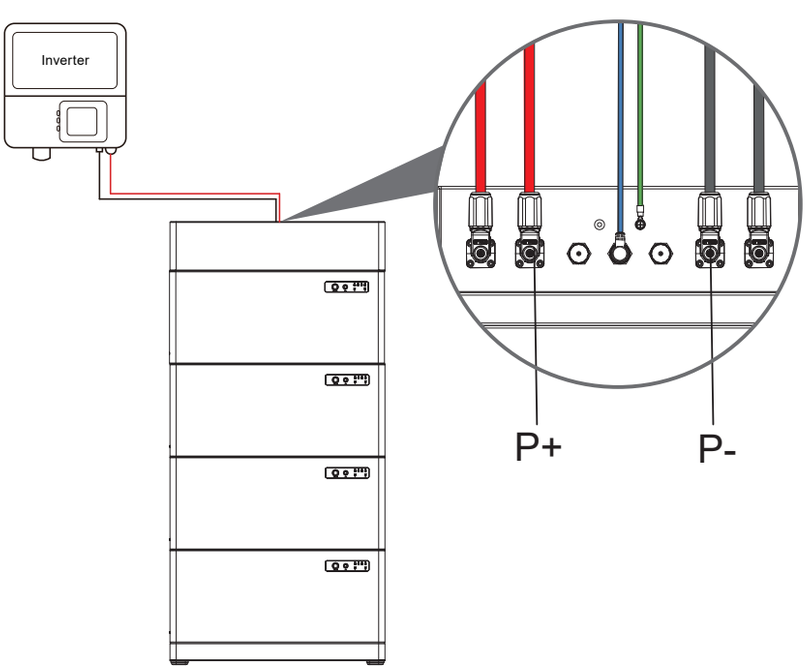

4.4 Installing an external signal cable

Choose signal cable type (CAN cable/ RS485 cable) based on the Inverter when laying out a signal cable. Separate the Signal Cable from power cables when connect it between the BB and the Inverter and keep it away from strong interference sources to prevent communication interruption.

CAN cable:
The wiring order of the signal cable is as follows:
(1) White with an orange stripe
(2) Orange
(3) White with a green stripe
(4) Blue
(5) White with a blue stripe
(6) Green
(7) White with a brown stripe
(8) Brown

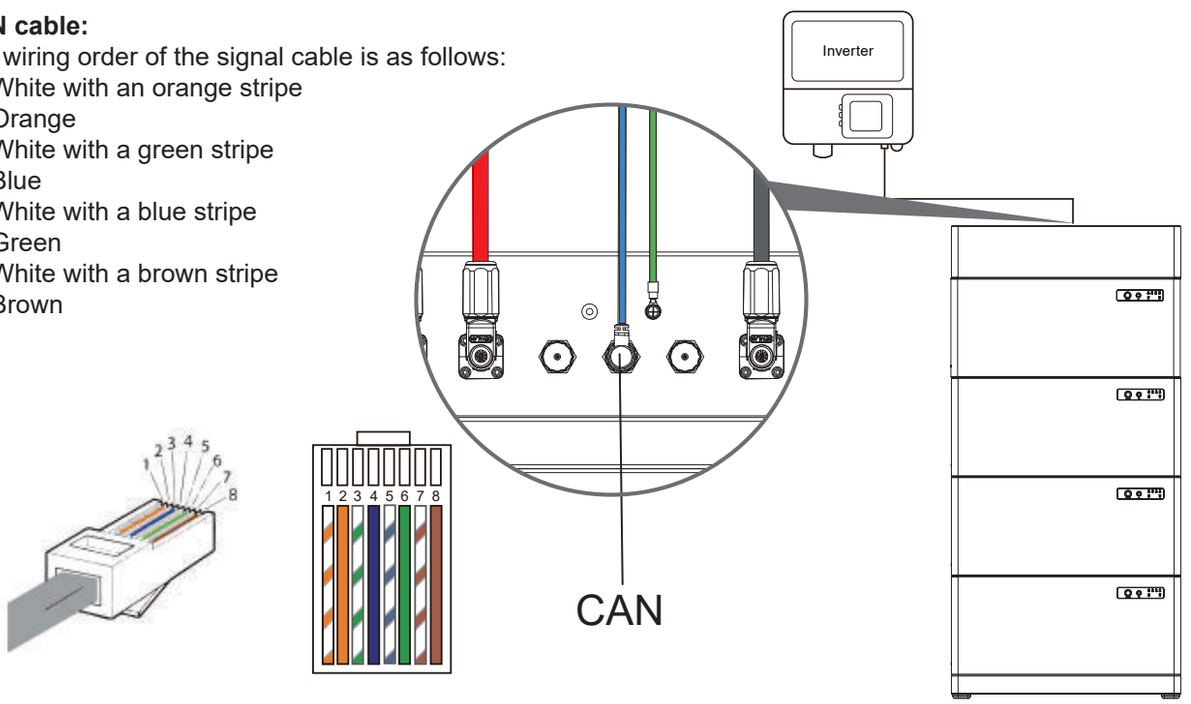

Sequence	1	2	3	4	5	6	7	8
CAN	NC	NC	NC	CAN_ H	CAN_ L	NC	NC	NC

4.5 Assembling baffle to break box

After connecting the cables with inverter, you can assemble the baffle to battery as below.

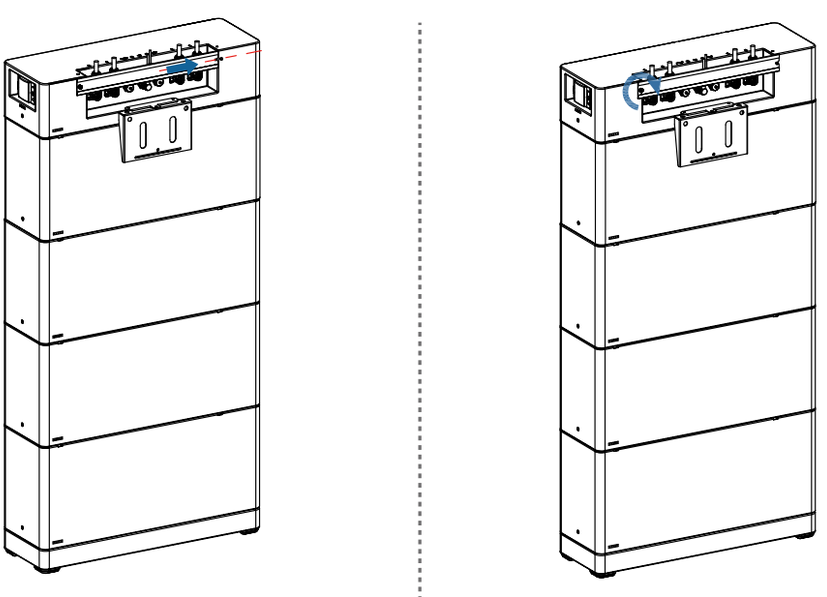

4.6 Parallel connection of batteries

You can connect the cables between two batteries as below. 3 battery clusters can be connected in parallel.

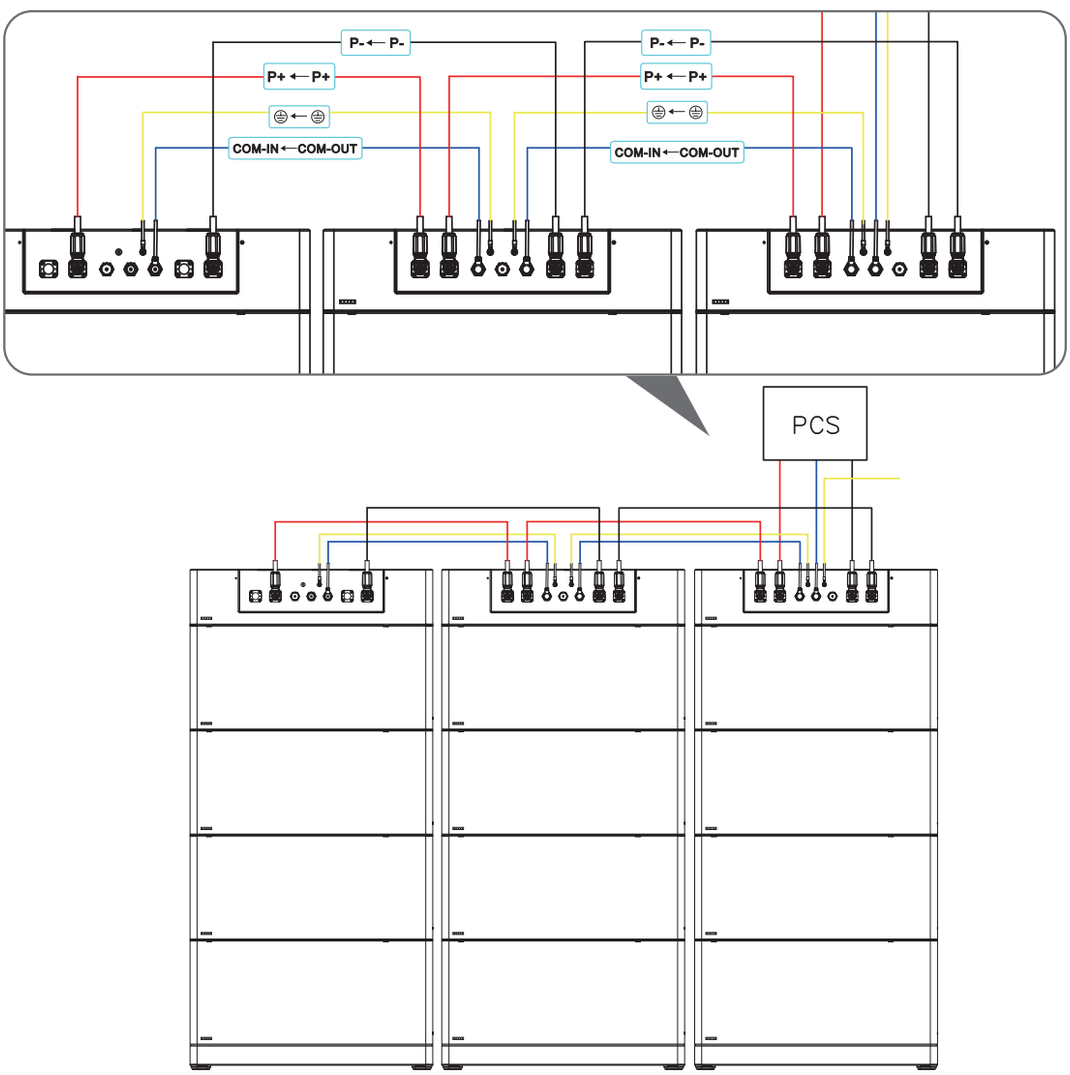

Saturn LV5-03

05 System commissioning

5.1 Inspection before power on

Table: Checklist and Acceptance Criteria

No.	Check Item	Acceptance Criteria
1	Installation	The installation is correct and reliable.
2	Grounding	The GD cable is connected correctly, securely and reliably.
3	Break Switch	The Break switch is OFF.
4	Cable connection	The DC power cables, signal cables and ground cables are connected correctly, securely, and reliably.
5	Installation environment	The installation space is proper, and the installation environment is clean and tidy.

5.3 System power on

Power on the system through the following steps:
1. Turn the Break switch ON.
2. Press the switch button (SW) on equipment.
3. The green running LED should normally be ON.
4. If it is failed to switch on the system, check that all the electrical connections are correct.
5. If the electrical connections are correct but the system is still not able to switch on, contact our after-sale service within 48 hours.

5.4 System power off

Power off the system through the following steps:
1. Turn off the inverter.
2. Press the switch button(SW) to be OFF.
3. Ensure that all LED indicators are OFF and the system has shut down completely.
4. Turn off the Break switch.
5. Disconnect all the system wiring.

⚠ WARNING

After the system powers off, residual electricity and heat may still pose risks of electric shocks and burns. Therefore, it is advisable to wear protective gloves and wait 15 minutes after the system has powered off before performing any operations on the system.

5.4 LED indicator

NOTE

○ refers to the LED indicator is off
● refers to the LED indicator is on
⊘ refers to the LED indicator is blinking

LED Indicator	SOC Indicator Description	Acceptance Criteria
• Red light is off • Green light blinking for 1s • Blue light is displayed as shown in the figure		SOC=0%
		0%<SOC<25%
		25%≤SOC<50%
		50%≤SOC<75%
	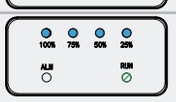	75%≤SOC≤100%

LED Indicator	LED & SOC Indicator	Fault Description
Green light blinking for 1s Red light on	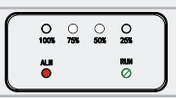	Over voltage
	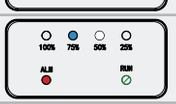	Over current
		Under voltage
		Over temperature

06 System maintenance

6.1 Routine maintenance

To ensure that the system can operate properly for a long term, it is recommended to perform routine maintenance according to the description in this chapter.

CAUTION

Power off the system before cleaning the system, connecting cables and ensuring the grounding reliability.

Saturn LV5-03

Check Item	Check Method	Maintenance Period
Appearance status	Check that the battery module is not damaged or deformed.	Once every 6 months
System running Status	Check that the battery module does not generate abnormal sound when it is in operation.	Once every 6 months
Electrical Connection	Check that cables are secured and intact. In particular, the parts touching the metallic surface are not scratched.	The first inspection is 6 months after the initial commissioning. From then on, the interval can be 6 to 12 months.
Ground reliability	Check that ground cables are securely connected.	The first inspection is 6 months after the initial commissioning. From then on, the interval can be 6 to 12 months.

6.2 Troubleshooting

Common alarms find troubleshooting measures as follows:

No.	Software Error	LED & SOC Indicator	Troubleshooting
1	Over voltage	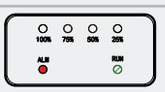	Please contact your dealer or technical support.
2	Under voltage	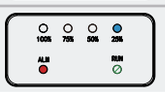	Please contact your dealer or technical support.
3	Over temperature	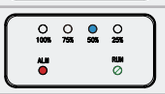	Wait till the temperature of cell goes back to the normal state.
4	Under temperature	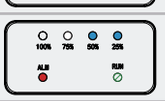	Wait till the temperature of cell goes back to the normal state.
5	Over current		Please contact your dealer or technical support.
6	Self-test error		Wait till the temperature of cell goes back to the normal state.
7	Precharge error		Please contact your dealer or technical support.
8	Relay error		Please contact your dealer or technical support.
9	Communication timeout		Please contact your dealer or technical support.
10	Large differential voltage	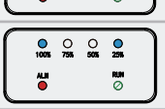	Please contact your dealer or technical support.
11	Large differential temperature		Please contact your dealer or technical support.
12	Reverse connection error		Please contact your dealer or technical support.

Saturn LV5-03

No.	Hardware Error	LED & SOC Indicator	Troubleshooting
1	Over voltage	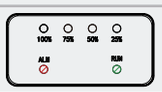	Please contact your dealer or technical support.
2	Under voltage	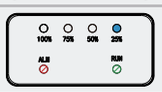	Please contact your dealer or technical support.
3	Over temperature	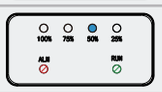	Wait till the temperature of cell goes back to the normal state.
4	External short circuit	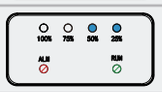	Please contact your dealer or technical support.
5	Over current		Please contact your dealer or technical support.
6	AFE error		Please contact your dealer or technical support.
7	Voltage sensor error		Please contact your dealer or technical support.
8	Temperature sensor error		Please contact your dealer or technical support.
9	Current sensor error	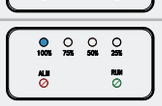	Please contact your dealer or technical support.

No.	Associated Address Error	LED & SOC Indicator	Troubleshooting
1	Timeout	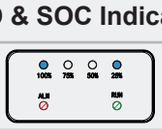	Please contact your dealer or technical support.
2	Error		Please contact your dealer or technical support.

CAUTION

If you meet other types of LED & SOC indicator that you cannot deal with, please contact your dealer or technical support.

07 What to do in case of an emergency

In the event of any threat to health or safety, always begin with these two steps before addressing the other suggestions below:
1. Immediately contact the fire department or other relevant emergency response team.
2. Notify all people who might be affected and ensure that they can evacuate the area.

WARNING

Only perform the suggested actions below, if it is safe to do so.

7.1 In case of fire

The battery module may catch fire when heated about 150°C.
1. Press the Switch button (SW) to be OFF.
2. Turn off the breaker to the inverter.
3. Acceptable fire extinguisher types are CO_2 and ABC.

7.2 In case of flooding

1. Stay out of the water if any part of the battery module or any wiring is submerged.
2. Press the Switch button (SW) to be OFF.
3. Turn off the breaker to the inverter.
4. If possible, protect the system by finding and stopping the source of the water, and pumping water away.
5. Let the area dry completely before use.

7.3 In case of unusual noises

1. Press the Switch button (SW) to be OFF.
2. Turn off the breaker to the inverter.
3. Ensure that nothing is inside the case, then restart the system and if there are still unusual noises, please contact your dealer or technical support.

7.4 In case of unusual smell or smoke

1. Please ensure your safety first, then contact your dealer or fire department based on the actual situation to move to the next step.
2. Press the Switch button (SW) to be OFF.
3. Turn off the breaker to the inverter.
4. Ensure nothing is in contact with the battery system.

Saturn LV5-03

31

Your project.
Our support.

SALES & SERVICE

Wayton Energy Tech Co., Ltd.
tech@waytonenergy.com
www.waytonenergy.com

For model selection, quotations and service coordination, contact WAYTON.
Manufacturer technical specifications and applicable warranty terms remain unchanged.