USER MANUAL

Saturn Residential Storage System

MODEL: Saturn LV16-01
Lithium-ion Battery



CESC

USER MANUAL

Model :
Saturn LV16-01

Contents

01	**Safety**	**02**
1.1	Safety instructions	02
1.2	Symbols in this document	02
1.3	Qualified personnel	02
1.4	Equipment requirements	03
1.5	Electrical requirements	03
1.6	Installation requirements	03
1.7	Environment requirements	04
02	**Product introduction**	**05**
2.1	Dimension and weight	05
2.2	Appearance	06
2.3	Battery Module Port & Control Interface introduction	07
2.4	Battery system specifications	08
2.5	Performance	08
2.6	Labels	09
03	**Installation instructions**	**10**
3.1	Installation contents	10
3.2	Tools & Instruments prepared (not supplied)	13
3.3	Installation location and clearance	15
3.4	Battery installation	16
04	**Cable connection**	**19**
4.1	External electrical connection of the battery system	19
4.2	Installing an external grounding	20
4.3	Installing external DC power cables	20
4.4	Installing an external signal cable	21
4.5	Parallel Connection (Optional)	22
05	**Install the anti-tamper plate**	**23**
06	**System commissioning**	**24**
6.1	Inspection before power on	24
6.2	System power on	24
6.3	System power off	24
6.4	LED indicator	25
07	**System maintenance**	**28**
7.1	Routine maintenance	28
08	**What to do in case of an emergency**	**29**
8.1	In case of fire	29
8.2	In case of flooding	29
8.3	In case of unusual noises	29
8.4	In case of unusual smell or smoke	29

All information in this manual is subject to copyright and other intellectual property rights of CESC New Energy Technology Co., Ltd. This manual should not be modified, reproduced or copied, in whole or in part. The unauthorized use without prior written permission is strictly prohibited. CESC New Energy Technology Co., Ltd. All rights reserved.

Please read this entire document carefully before installing or using the battery system. Failure to do so or to follow any of the instructions or warnings in this document can result in electrical shock, serious injury or death, can damage battery, potentially rendering it inoperable. Warranty claims are invalid, if damage is caused by human error in a manner inconsistent with the installation manual's instructions.

The information included in this manual is verified by CESC to be accurate at the time of publication. However, due to the continuous improvement of products, this manual is subject to change without prior notice. Unless otherwise specified, this manual is for operational guidance only, and all statements contained herein do not constitute any form of warranty.

The illustrations in this manual are intended to help explain operating system configurations and installation instructions. Any confusion, please contact CESC immediately for advice and clarification. Thank you for your choice and trust.

Saturn LV16-01

01 Safety

1.1 Safety instructions

For safety reasons, please read this entire manual before installing, servicing or using. Failure to comply with the instructions can result in electrical shock, serious injury, death or can damage the battery, potentially rendering it inoperable.

CAUTION

Proper disposal of batteries is required. Please refer to your local regulations for disposal requirements.

1.2 Symbols in this document

This manual uses the following symbols to highlight essential information:

	WARNING
	CAUTION
	DANGER
	RISK OF ELECTRIC SHOCK
	REFER TO OPERATING INSTRUCTIONS
	DO NOT THROW AWAY
	RECYCLABLE
	HEAVY WEIGHT MAY CAUSE SERIOUS INJURIES
	GROUND (EARTH) CONNECTION
	RISK OF ELECTRIC SHOCK ENERGY STORAGE DISCHARGE TIME

1.3 Qualified personnel

Battery Management System (BMS) installation and maintenance must be carried out only by certified installers who possess all following qualifications and experience:

- Knowledge of the installation of electrical devices.
- Knowledge of the functional principles and operation of on-grid and off-grid systems.
- Knowledge of the dangers and risks associated with installing and using electrical devices and acceptable mitigation methods.
- Knowledge of and adherence to this manual and all safety precautions and best practices.
- Knowledge of the protective measures to minimize hazards to themselves and others.

1.4 Equipment requirements

- If the battery module seems to be damaged, pack it in its original container, and then return it to your distributor.
- Do not damage the battery module.
- Do not use water to clean electrical components inside or outside of the battery module.
- Do not stand on, lean on, or sit on the top of the battery module.
- Repair any paint scratches caused during battery module transportation or installation in a timely manner.
- Battery module with scratches cannot be exposed to an outdoor environment for a long period of time.

1.5 Electrical requirements

- Ensure that the power setting matches the rated input of this power supply.
- Make sure to connect the protective grounding to prevent an electric shock before activating the power.
- Never sever the internal or external protective grounding wire, or disconnect the wiring of protective grounding terminal. Such actions can create a shock hazard, potentially causing injury.
- Do not connect the battery module directly to photo-voltaic (PV) solar wiring.
- Do not short-circuit the wiring terminals of the battery module. Short circuits can cause a fire hazard.

DANGER

Before connecting cables, ensure that the equipment is intact. Otherwise, electric shocks or fire hazards may occur.

1.6 Installation requirements

- Understand the components and functioning of a grid-tied PV power system and relevant local standards.
- Do not install, use, or operate outdoor equipment and cables in harsh weather conditions such as lightning, rain, snow, and level 6 or stronger wind.
- Wear proper personal protective equipment (PPE) during operation. If there is a probability of personal injury or equipment damage, immediately stop the operations, report the case to the supervisor, and take feasible protective measures.
- Tighten screws using tools when installing the battery module.
- To prevent fire due to high temperature, ensure that the ventilation vents of the heat dissipation system are not blocked when the battery is running.
- After installing the battery module, remove idle packing materials such as cartons, foam, plastics and cable ties from the equipment area.

DANGER

Do not work with live electricity during installation and equipment operation.

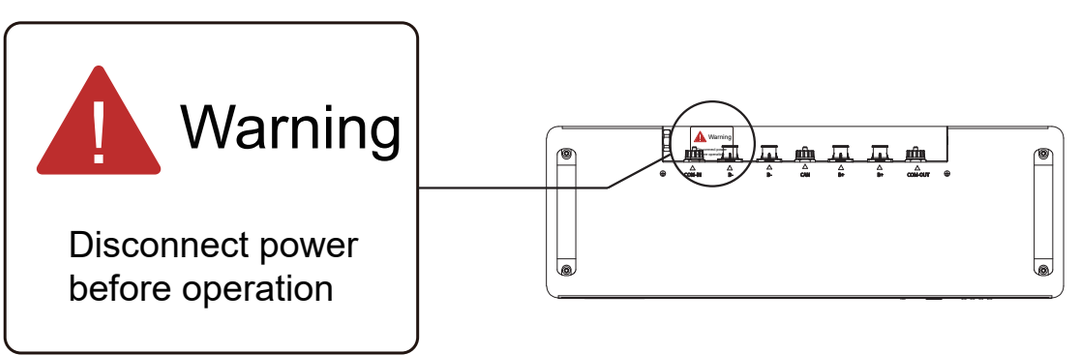

Example Product: Saturn LV5-02 (Top View)

WARNING

It is not recommended to connect a circuit breaker or isolating switch, especially an AC circuit breaker, between the battery and the inverter connection line. If a DC circuit breaker or isolating switch must be connected in series, it needs to be closed before starting the battery; otherwise, there is a risk of battery damage or potential electric shock.

1.7 Environment requirements

Operating Temperature	Charge: 0°C-50°C/Discharge: -20°C-50°C
Humidity	≤95%
Storage < =6 months	Stage of Energy (SOE): 50% initial
Maximum Altitude	≤ 4000m

- Install the battery module in a dry and well-ventilated environment to ensure good heat dissipation.
- Install the battery module in a sheltered place or install an awning over it.
- Install the battery module at a height that prevents damage from flooding.
- Avoid exposing the battery module to direct sunlight or water.
- Do not install the battery module near heating equipment.
- Do not place any flammable or explosive materials around the battery module.
- Do not subject the battery module to high pressures.
- Do not place any objects on top of the battery module.
- Do not expose the battery module to ambient temperatures above 60°C (140°F) or below -30°C (-22°F).
- Children are not allowed to enter the installation position.
- Operating or storing the battery module in temperatures outside its specified range might cause damage to the battery module.
- Ensure that there is minimal dust and dirt in the area.
- Ensure that no water sources are above or near the battery module, including downspouts, sprinklers, or faucets.
- The battery module site must be equipped with qualified fire extinguishing facilities, such as fire extinguishing sands and powder fire extinguishers.

CAUTION

The recommended operating temperature ranges from 15°C to 30°C.

02 Product introduction

2.1 Dimension and weight

2.1.1 Foot Pad Version

W*D*H: 724*240*710(mm)
Weight: 121kg

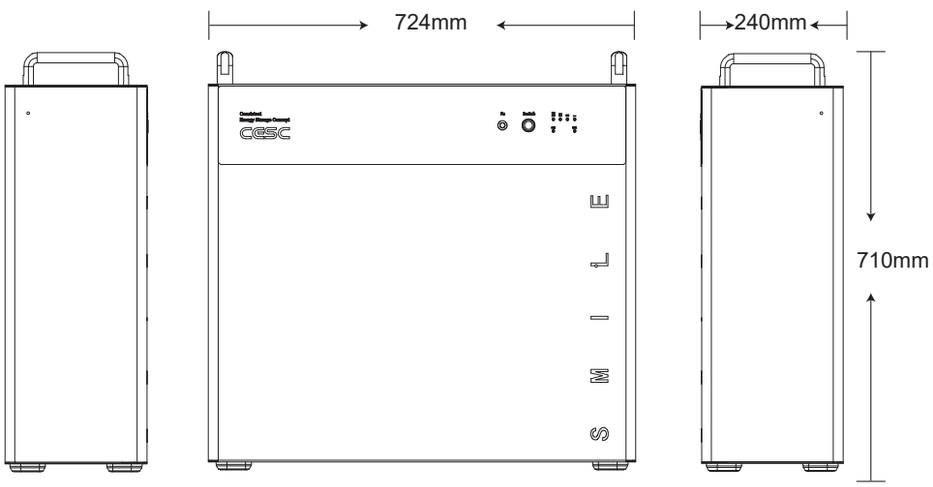

2.1.2 Caster Version (Optional)

W*D*H: 724*240*770(mm)
Weight: 122kg

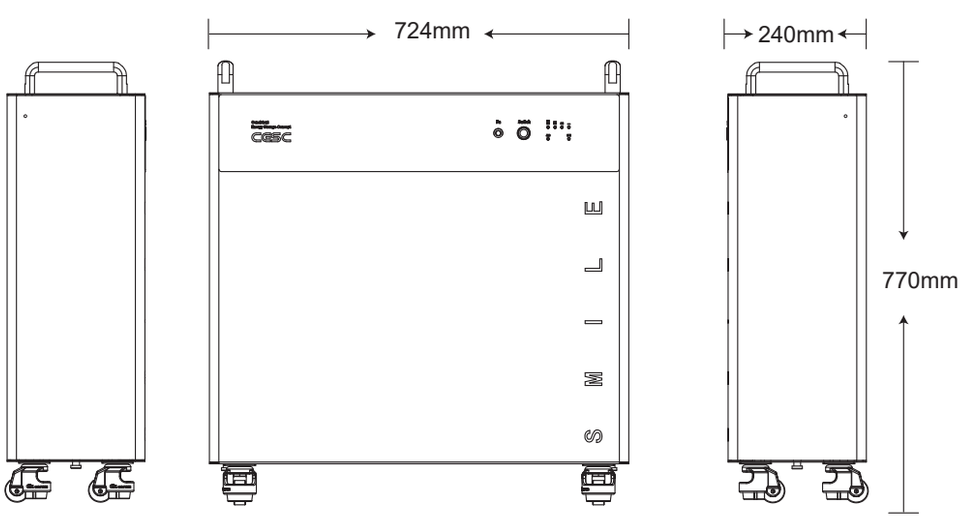

Saturn LV16-01

2.2 Appearance

2.2.1 Battery system appearance

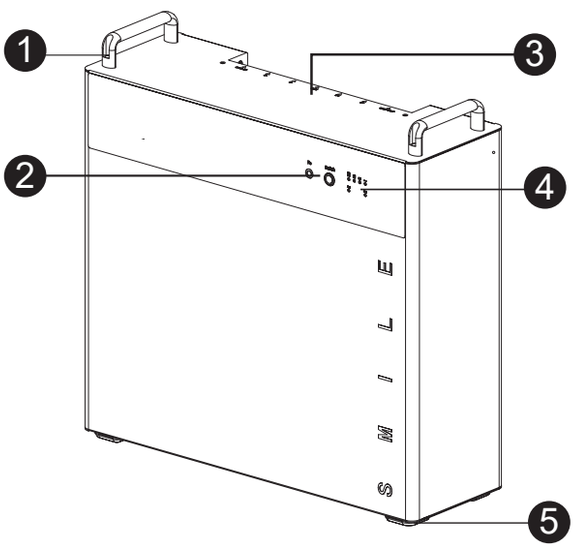

Foot Pad Version

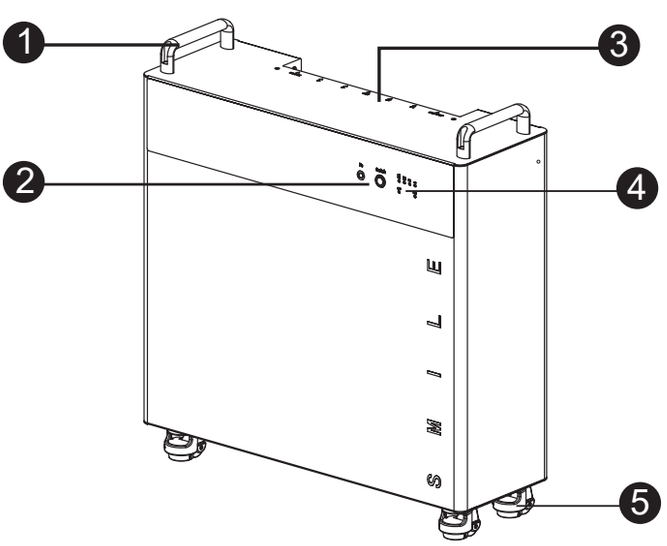

Caster Version (Optional)

No.	Description
1	Handle:For manual handling of the battery
2	Control Button
3	Battery Module Port
4	LED: Indicates the operating status.
5	Foot Pad/Caster (Optional)

2.3 Battery Module Port & Control Interface introduction

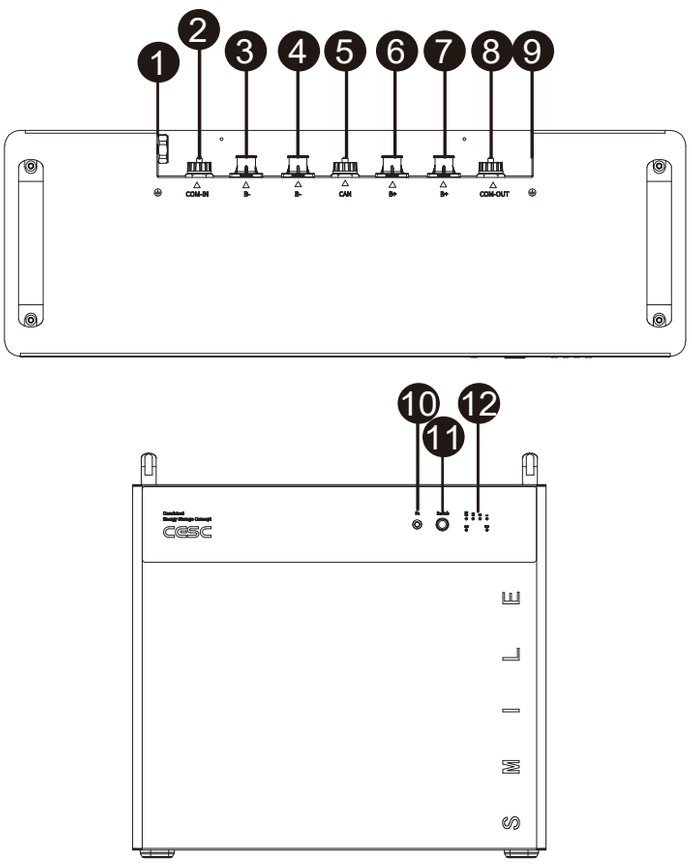

No.	Port Signs	Function Description
1	⏚	Grounding point
2	COM-IN	COM cable port
3&4	B-	Power -
5	CAN	CAN cable port
6&7	B+	Power +
8	COM-OUT	Com cable port
9	⏚	Grounding point
10	FN	Address assignment
11	SW	Switch on/off the battery system
12	LED	Indicates the battery system status, running green light, warning red light

Saturn LV16-01

2.4 Battery system specifications

Saturn LV16-01 SYS Configuration List

Battery System Type	Saturn LV16-01	2*Saturn LV16-01	3*Saturn LV16-01	4*Saturn LV16-01
Total Energy [kWh]	16	32	48	64
Battery Module	51.2V 16kWh			
Number of Modules	1	2	3	4
Cell Type	LFP ($LiFePO_4$)			
Nominal Voltage [V]	51.2			
Operating Voltage Range [V]	40-58.4			
Max. Charge / Discharge Current [A]	300	400	400	400
Continue charge / discharge current [A]	200	400	400	400
Continue Discharge Output [kW]	10.24	20.48	20.48	20.48
Dimension [W/D/H. mm]	724*240*710			
Approximate Weight [KG]	121	242	363	484

The Battery has Dual Ports, Max Output Current per Port: 200A.
Attention: The parallel current of the battery is limited by the specifications of the parallel box（CB-02).

2.5 Performance

Recommended Depth of Discharge	90%
LED Indicator	4 LED (SOC: 25%-SOC:100% blue), 2 LED (working green, alarming red)
IP Rating of Enclosure	IP65
Operating Temperature	Charge: 0°C-50°C/Discharge: -20°C-50°C
Storage Temperature	0°C~35°C
Humidity	≤95%
Altitude	≤4000m
Cycle Life	10+years, ≥8000 cycles (70% EOL, 80%DOD, 25 ˚C)
Installation	Floor-mounted, Wall-mounted (Optional)
Equipment Form	Casters (Optional)
Fire extinguishing	Aerosol (Optional)
Communication Port	CAN

The current is affected by temperature and SOC.

2.6 Labels

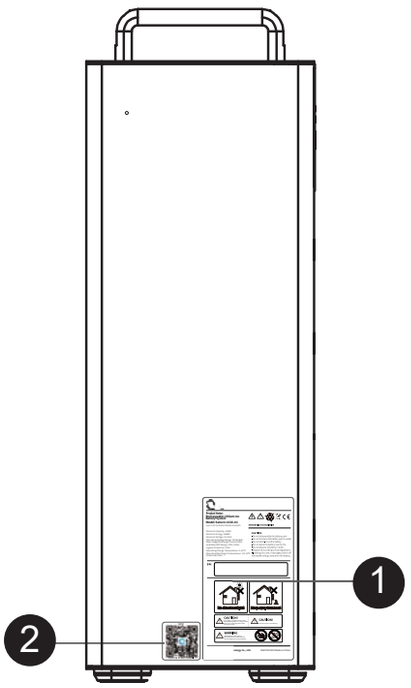

1 Battery System Label

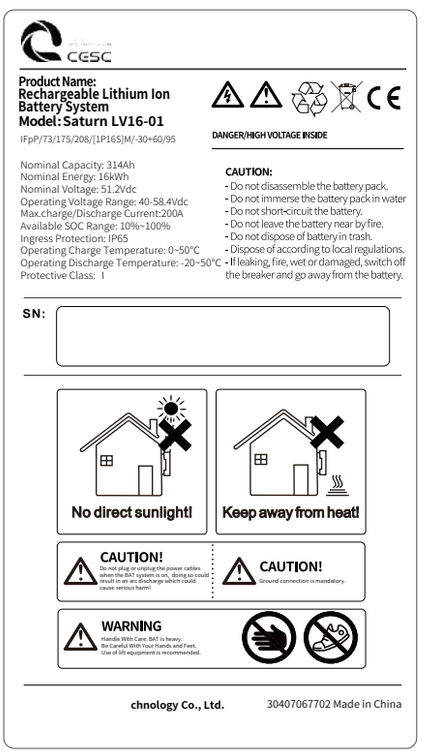

2 QR code Label



Saturn LV16-01

03 Installation instructions

3.1 Installation contents

The following items are required for battery installation.

No.	Object	Description	Quantity
1	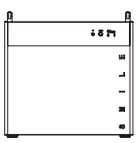	Battery	1
2		Caster	4*
3	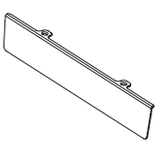	Anti-tamper Plate	1
4	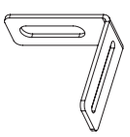	Wall Mounting Plate	2
5	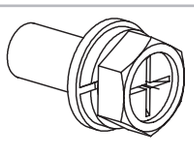	Hexagon Socket Cross Recessed Combination Screw-M5×12	5
6	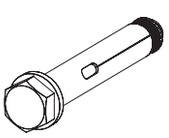	Expansion Bolt-M8X60	4
7		Cross Recessed Countersunk Head Screw M4×8	2
8	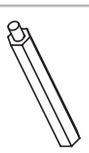	Hexagonal Standoff, One-End Threaded M4×55	2
9	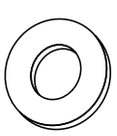	Washer	4
10	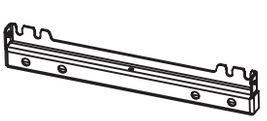	Wall Locking Panel (for wall mounting)	1*

Saturn LV16-01

NO.	Object	Description	Quantity
11	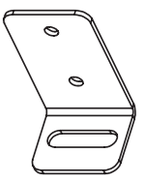	Wall Mounting Plate (for wall mounting)	2*
12		Foot cup (for wall mounting)	4*
13		Anti-Collision Silicone Pad (for wall mounting)	2*
14	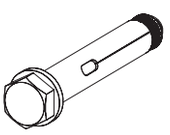	Expansion Bolt-M8X60 (for wall mounting)	4*
15	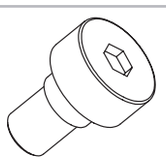	Shoulder Screw M5 (for wall mounting)	4*
16	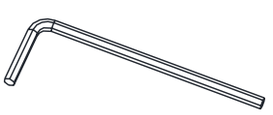	Hex Wrench (for wall mounting)	1*
17		COM Cable (BAT-BAT) 24AWG,500mm	1*
18	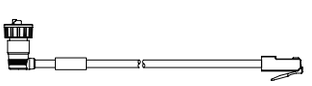	COM Cable (BAT-PCS) 24AWG,1500mm	1
19	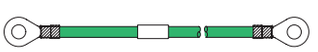	Ground Cable (BAT-Electric Box) 4AWG,1500mm, hole diameter 10mm	1
20		Negative Power Cable (Black) 50mm^2, 1500mm, hole diameter 10mm	1
21		Positive power cable (Orange) 50mm^2,1500mm, hole diameter 10mm	1

*Stands for optional item according to demand.

3.2 Tools & Instruments prepared (not supplied)

The following tools shall be prepared before installation.

No.	Tools	Description	Function
1	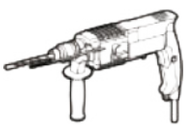	Percussion drill (12mm)	Wall drilling
2		Screwdriver (6mm)	Removing, installing screws and wiring
3		Hammer Head	Drive in nails/screws, align parts, or loosen stuck items
4		Wrench Set	Tighten or remove bolts/nuts
5		Socket (8mm&10mm& 13mm&16mm)	Tight/loose fasteners
6		Hydraulic pliers	Crimp the power cables
7	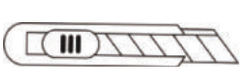	Electrician’s Knife	Strips cable insulation, cuts cables to length
8		Multimeter	Check whether the cable wiring is correct, the positive and negative battery terminals are correct and voltage, and grounding is reliable

No.	Tools	Description	Function
9		Marking pen	Drilling mark
10		Tape	Measurement distance
11		Gradienter	Ensure horizontal installation

Saturn LV16-01

Protective tools

No.	Tool	Tool Name
1	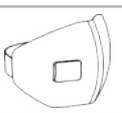	Dust mask
2		Goggles
3		Insulated gloves
4		Insulated shoes
5		Safety helmet

WARNING

The battery modules are heavy. Wear appropriate personal protective equipment (such as gloves and safety shoes) when handling the unit. Only a sufficient number of trained movers should lift the battery modules. The use of lift equipment is recommended.

3.3 Installation location and clearance

Installation location requirements:

- There must be not highly flammable or explosive materials nearby.
- The ambient temperature should be within the range of -20°C to 50°C (-4°F to 122°F).
- The battery module must be installed on flat leveled ground that can support its weight.
- Product shall be installed indoors (e.g. in a basement or a garage) or outdoors under an eave out of direct sunlight.

Recommendations:

- The building should be designed to withstand earthquakes.
- The area should be waterproof and properly ventilated (IP65).
- The product should be installed out of reach of children and animals.

> **CAUTION**
>
> If the ambient temperature is outside the operating range, the battery module will stop operating to protect itself. The optimal temperature range for the battery module to operate is from 15°C to 30 °C (59°F to 86°F). Frequent exposure to harsh temperatures may deteriorate the performance and lifespan of the battery module.

Recommened Clearance:

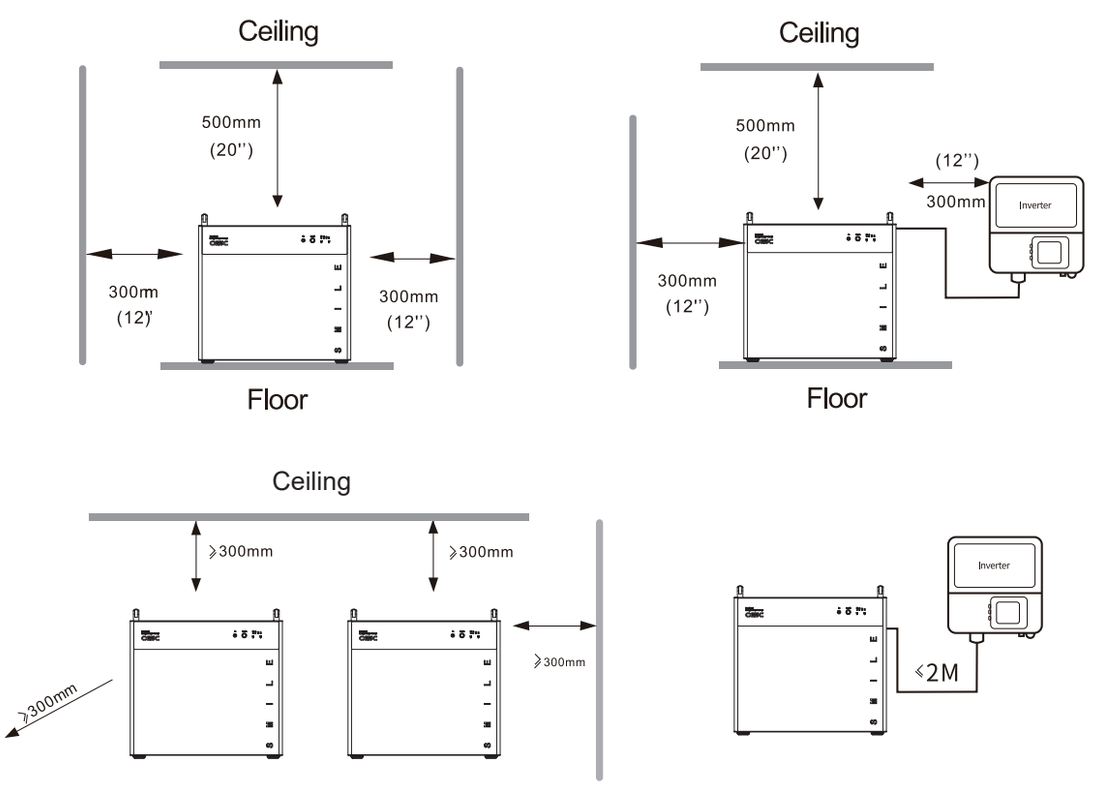

Recommended clearance for the left, right and top of the product is shown in the figure for the proper ventilation and installer convenience.

Saturn LV16-01

3.4 Battery installation

Step 1: Mount the battery securely to the wall.
Two mounting methods are available for installation: Floor-mounted and Wall-mounted(Optional).

- **Floor-mounted:**

Fasten the wall locking panel horizontally to the wall using Expansion Bolt-M8×60*2PCS.
Screw Locking Height: Foot Pad Version - 556±5 mm; Caster Version-613±5 mm.

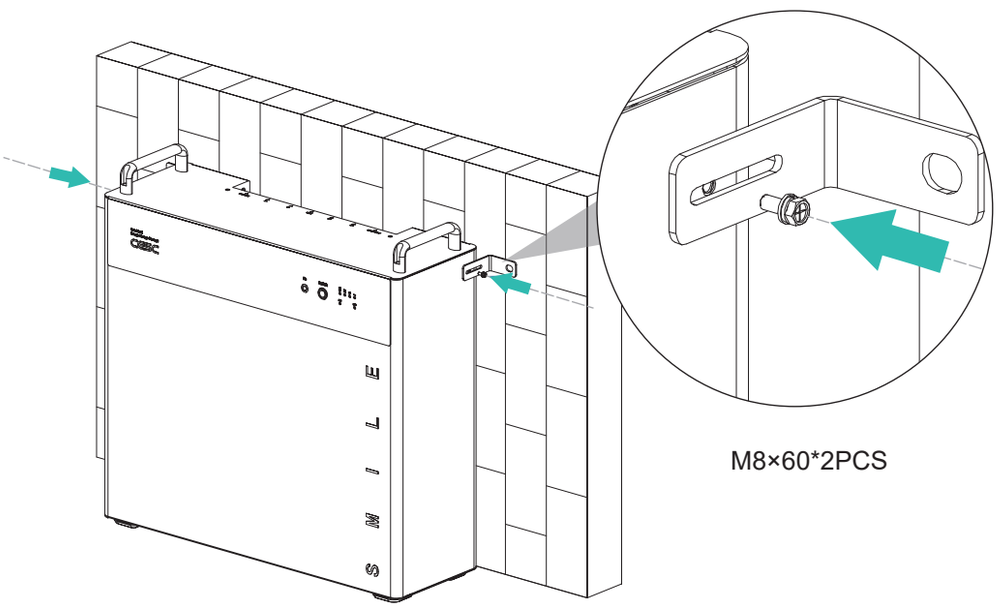

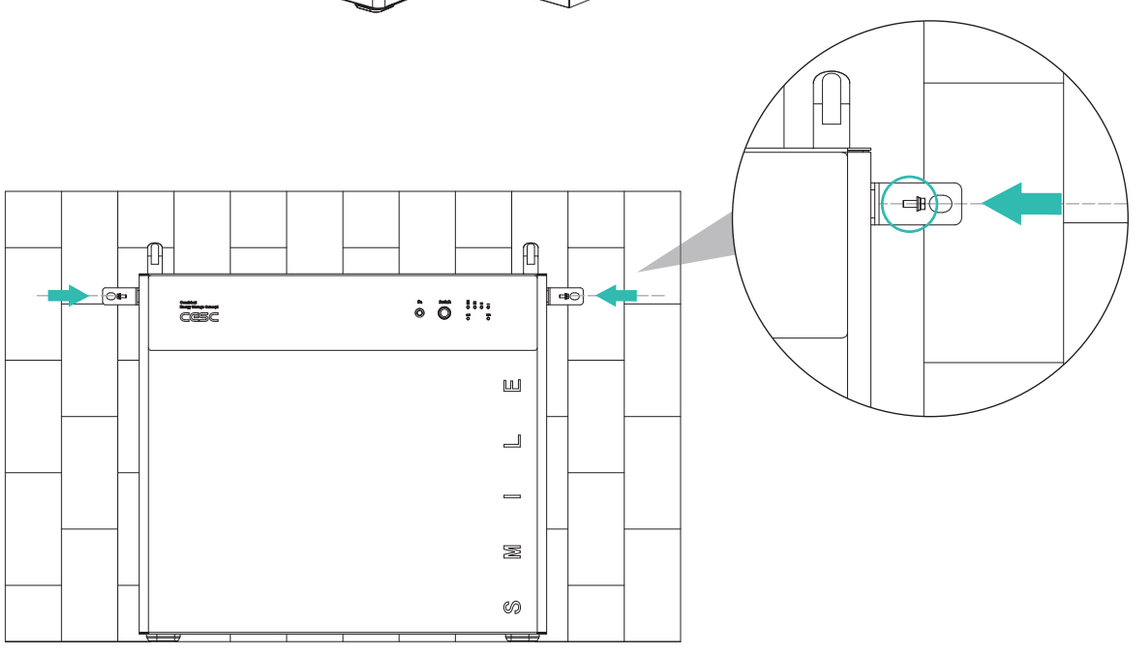

- **Wall-mounted(Optional):**

Step 1: Mount wall locking panel horizontally at required height with Expansion Bolt -M8X60.

> **WARNING**
>
> Wall-mounted installation requires professional evaluation of wall load-bearing capacity.

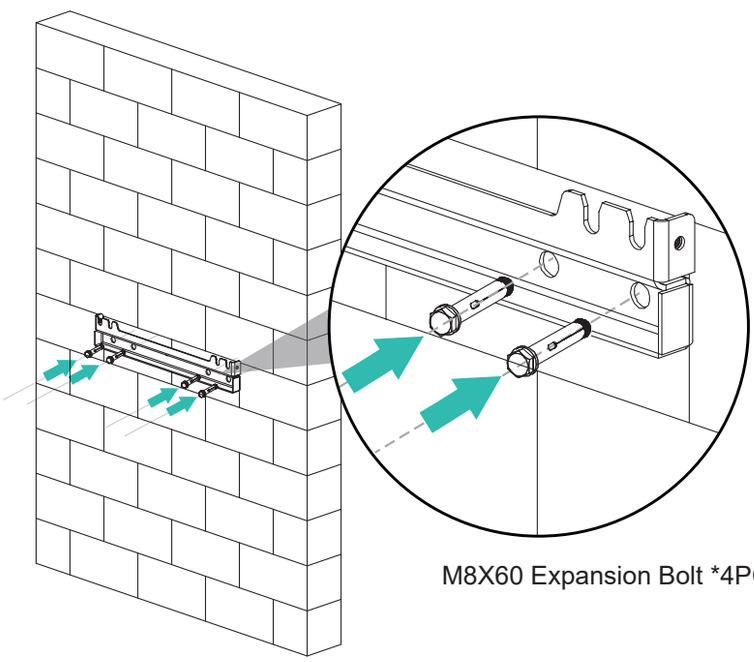

M8X60 Expansion Bolt *4PCS

Step 2: Fasten the wall mounting plate to the back of the battery pack using four M5 shoulder screws and a hex wrench.

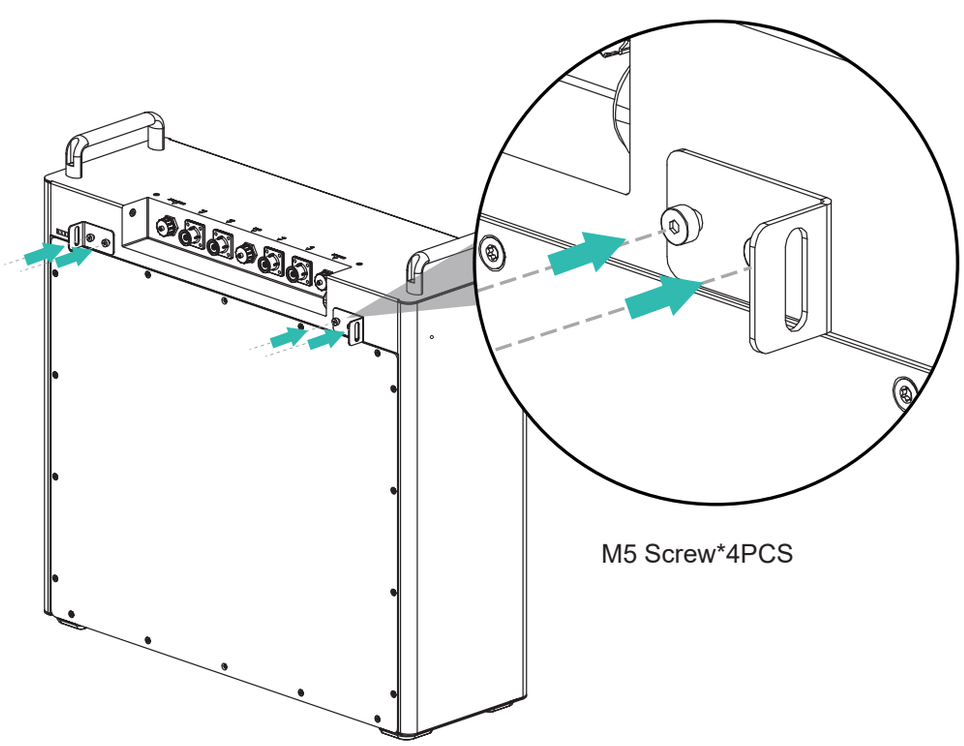

M5 Screw*4PCS

Saturn LV16-01

Step 3: Attach the anti-collision silicone pads to both sides of the battery's rear panel.

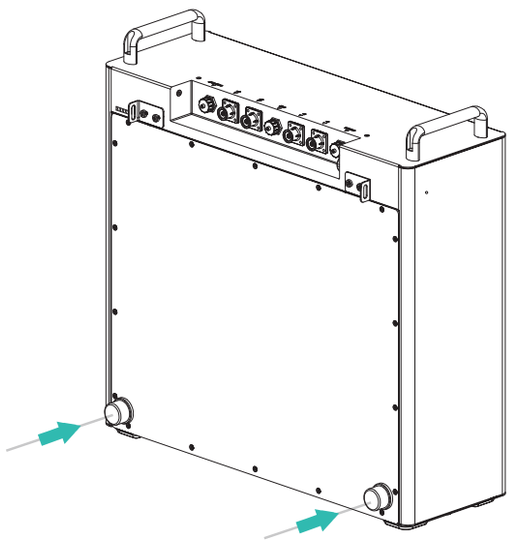

Step 4: Align wall mounting plate with the wall locking plate, then fasten the two panels together from the side using M5×12 screw*2PCS. Installation completed.

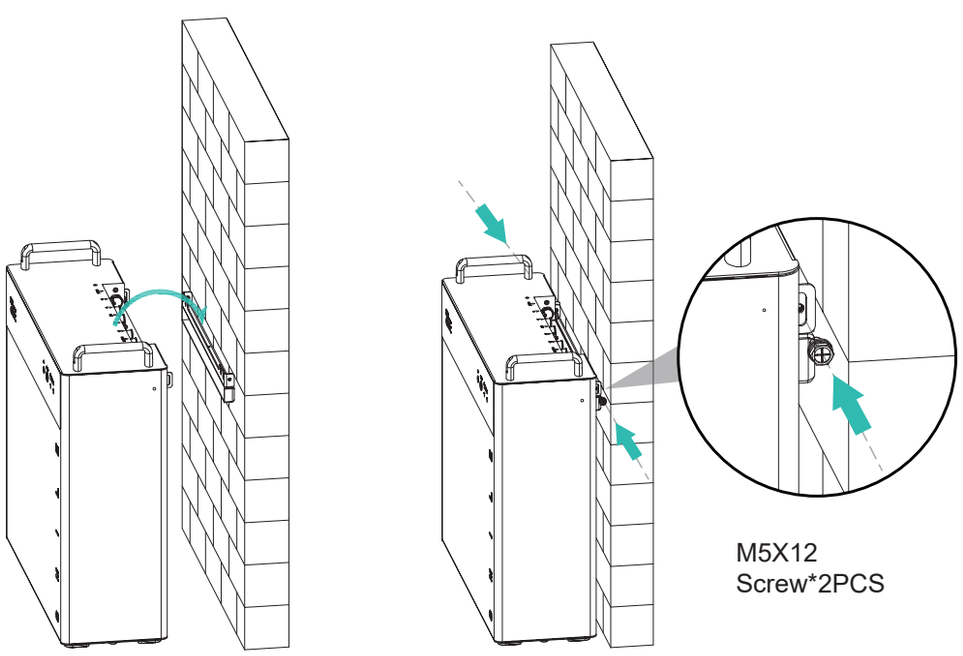

04 Cable connection

4.1 External electrical connection of the battery system

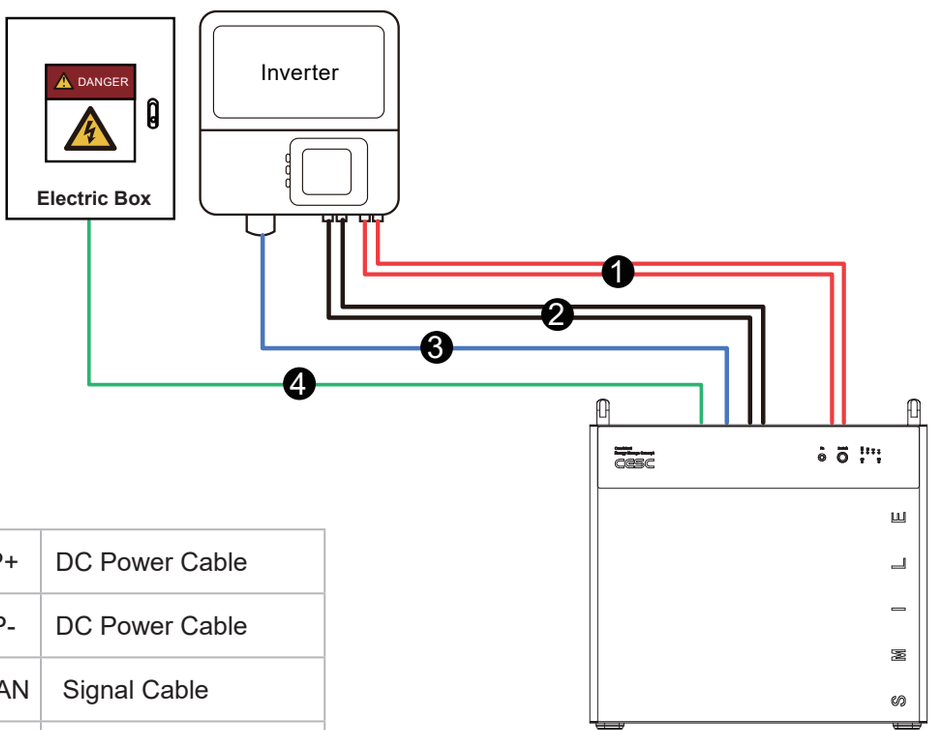

1	P+	DC Power Cable
2	P-	DC Power Cable
3	CAN	Signal Cable
4	⏚	Grounding

4.2 Installing an external grounding

Connect the ground point (⏚) of the BAT to the external Electric Box. Otherwise, electric shocks may occur.

> ⚠ **CAUTION**
>
> Do not connect the ground point (⏚) of the BAT to the external hybrid inverter.
> Otherwise, BMS maybe disturbed and can not work properly.

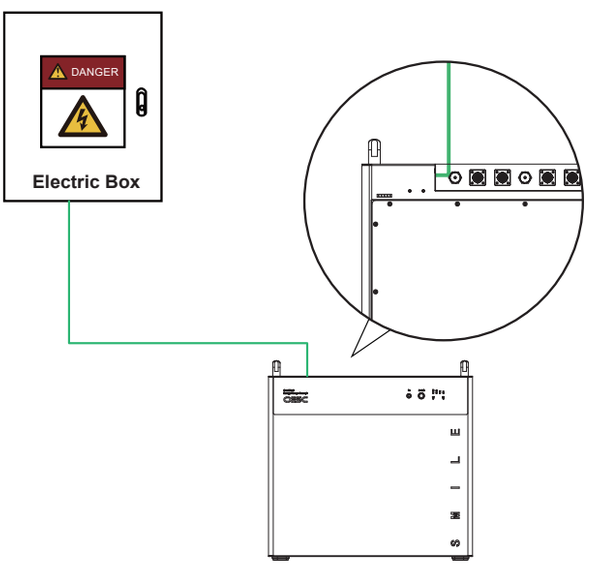

4.3 Installing external DC power cables

Insert the positive and negative battery connectors into the corresponding DC input terminals (P+ and P-). The positive power cable (BAT+) is red and negative power cable (BAT-) is black. Before assembling DC connectors, label the cable polarities to ensure correct cable connections.

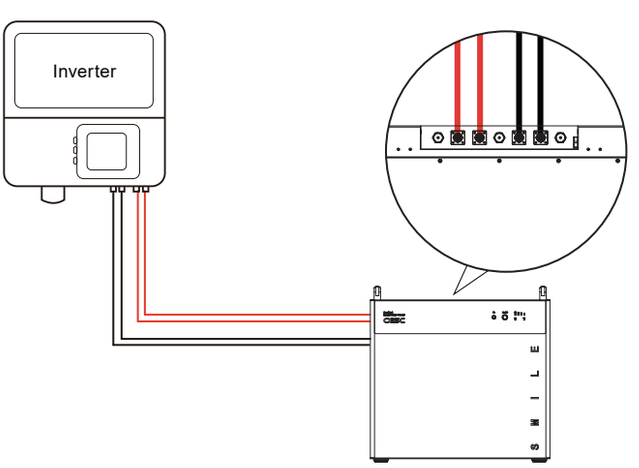

4.4 Installing an external signal cable

Choose signal cable type based on the Inverter when laying out a signal cable.
Separate the Signal Cable from power cables when connect it between the BAT and the Inverter and keep it away from strong interference sources to prevent communication interruption.

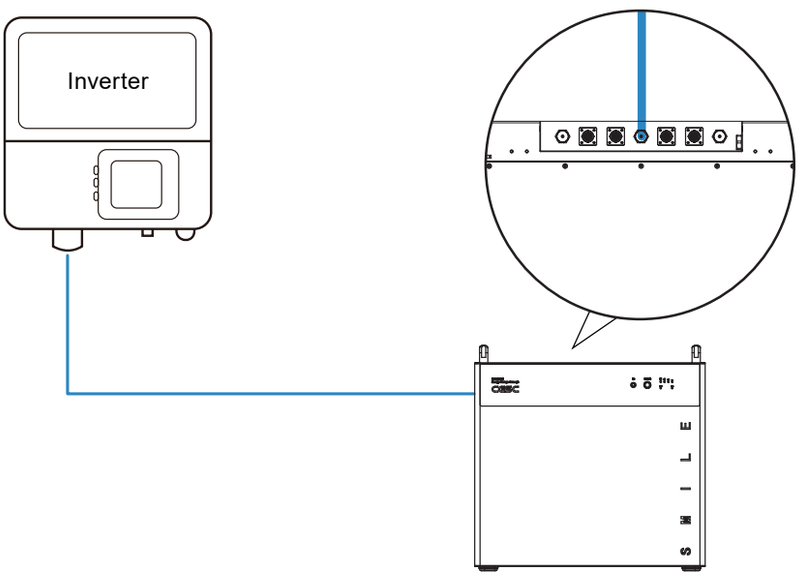

The wiring order of the signal cable is as follows:

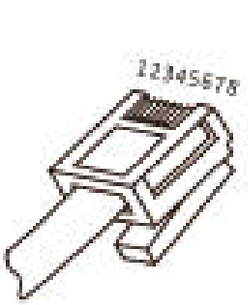

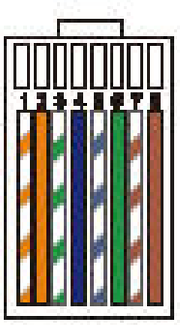

Sequence	Color	CAN
1	White with an orange stripe	NC
2	Orange	NC
3	White with a green stripe	NC
4	Blue	CAN_ H
5	White with a blue stripe	CAN_ L
6	Green	NC
7	White with a brown stripe	NC
8	Brown	NC

Saturn LV16-01

4.5 Parallel Connection (Optional)

When it is necessary to expand the battery capacity, the batteries shall be connected via a Combiner box.

Step 1: Connect the grounding cables of each battery pack and the Combiner box to the designated grounding terminal.
Step 2: Connect the communication cables between battery packs, then connect the final communication cable to the PCS.
Step 3: Connect the positive/negative cables of each battery pack to the corresponding ports on the Combiner box.
Step 4: Connect the output cables of the Combiner box to the corresponding ports on the PCS device.

Step 5: Verify that all cables are correctly polarized and securely connected.

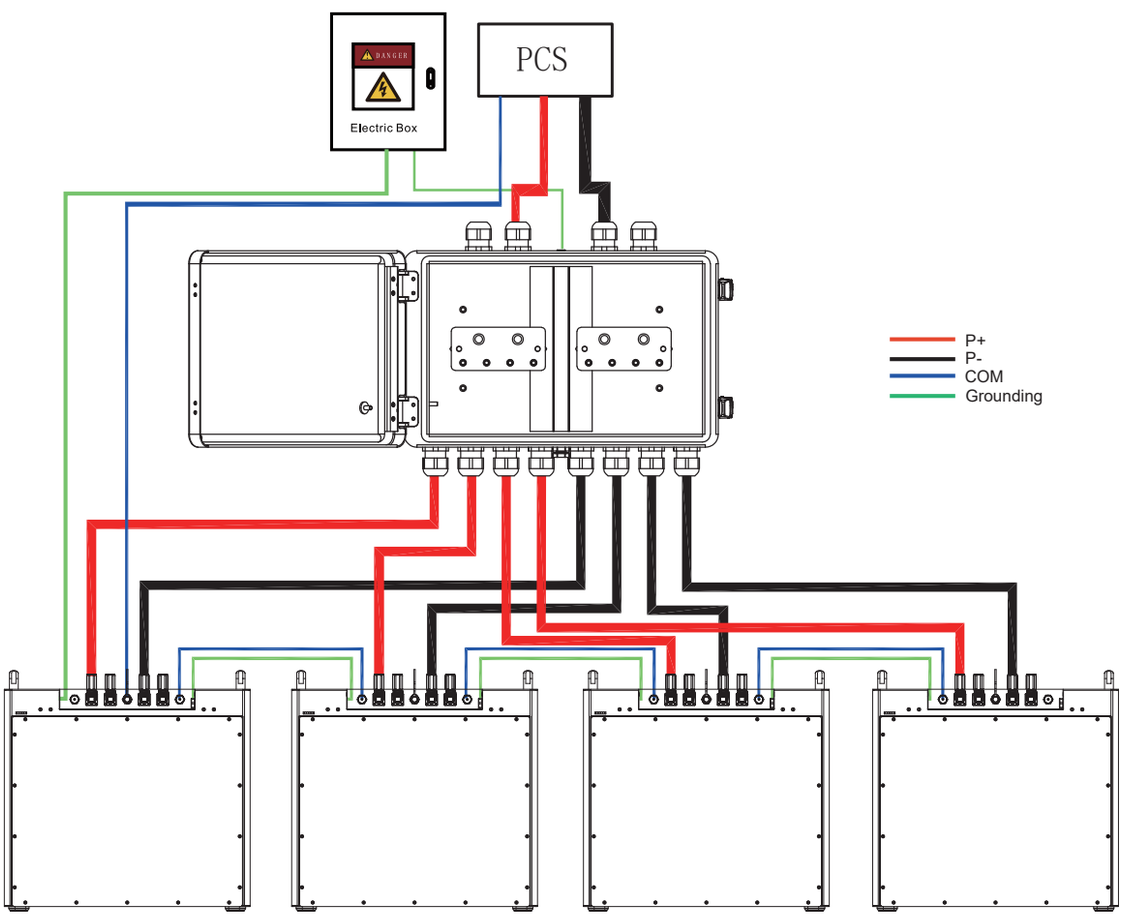

Note: The actual number of units used in parallel must take into account the inverter's battery-side current and the diameter of the P+ and P- cables.

CAUTION

The Combiner Box supports a maximum of 4 parallel-connected units.

05 Install the anti-tamper plate

After all cable connections are completed, please install the anti-tamper plate.

Step 1: Insert the two standoffs into the corresponding holes.

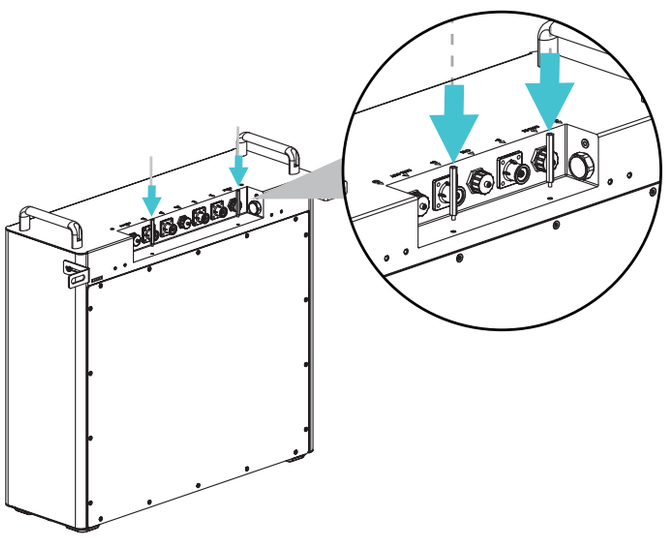

Step 2: Align the holes of the tamper-proof plate with the standoffs and install it on the back of the battery. Then secure the standoffs to the tamper-proof plate using M4×8 screws.

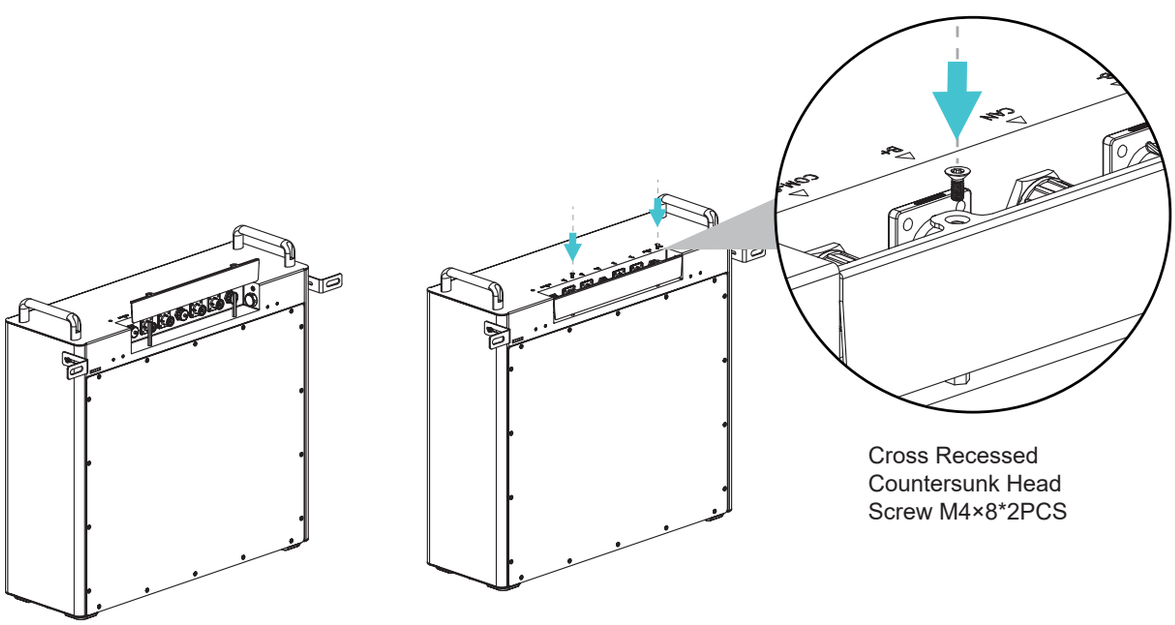

Cross Recessed
Countersunk Head
Screw M4×8*2PCS

06 System commissioning

6.1 Inspection before power on

Table: Checklist and Acceptance Criteria

No.	Check Item	Acceptance Criteria
1	Installation	The installation is correct and reliable.
2	Grounding	The GD cable is connected correctly, securely and reliably.
3	Cable connection	The DC power cables, signal cables and ground cables are connected correctly, securely, and reliably.
4	Installation environment	The installation space is proper, and the installation environment is clean and tidy.

6.2 System power on

Power on the system through the following steps:

1. Press the power switch button (SW) to start system.
2. The green running LED should be blinking,The blue running LED should normally be ON, the red light should be off.
3. If it is failed to switch on the system, check that all the electrical connections are correct.
4. If the electrical connections are correct but the system is still not able to switch on, contact our after-sale service within 48 hours.

6.3 System power off

Power off the system through the following steps:

1. Turn off the inverter.
2. Press the power switch button (SW) to stop system.
3. Ensure that all LED indicators are OFF and the system has shut down completely.
4. Disconnect all the system wiring.

WARNING

After the system powers off, residual electricity and heat may still pose risks of electric shocks and burns. Therefore, it is advisable to wear protective gloves and wait 15 minutes after the system has powered off before performing any operations on the system.

6.4 LED indicators

NOTE

◯ refers to the LED indicator is off

● refers to the LED indicator is on

⊘ refers to the LED indicator is blinking

LED Indicator	SOC Indicator	Description
• Red light is off • Green light blinking for 1s • Blue light is displayed as shown in the figure	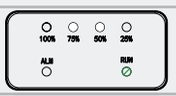	SOC=0%
		0%<SOC<25%
		25%≤SOC<50%
		50%≤SOC<75%
		75%≤SOC≤100%

LED Indicator	LED & SOC Indicator	Fault Description
• Green light blinking for 1s • Red light on • Blue light is displayed as shown in the figure	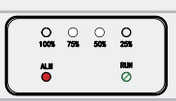	Over voltage
	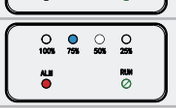	Over current
	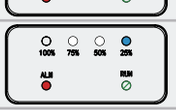	Under voltage
		Over temperature

Saturn LV16-01

Common alarms find troubleshooting measures as follows:

No.	Software Error	LED & SOC Indicator	Troubleshooting
1	Over voltage	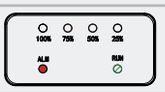	Please contact your dealer or technical support.
2	Under voltage	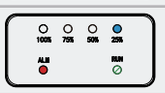	Please contact your dealer or technical support.
3	Over temperature	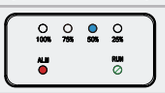	Wait till the temperature of cell goes back to the normal state.
4	Under temperature	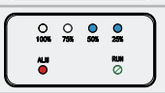	Wait till the temperature of cell goes back to the normal state.
5	Over current	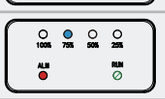	Please contact your dealer or technical support.
6	Self-test error		Wait till the temperature of cell goes back to the normal state.
7	Precharge error	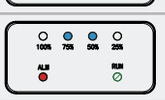	Please contact your dealer or technical support.
8	Relay error		Please contact your dealer or technical support.
9	Communication timeout		Please contact your dealer or technical support.
10	Large differential voltage		Please contact your dealer or technical support.
11	Large differential temperature		Please contact your dealer or technical support.
12	Reverse connection error		Please contact your dealer or technical support.

No.	Hardware Error	LED & SOC Indicator	Troubleshooting
1	Over voltage	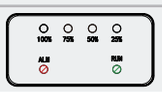	Please contact your dealer or technical support.
2	Under voltage	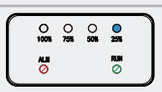	Please contact your dealer or technical support.
3	Over temperature	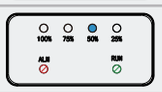	Wait till the temperature of cell goes back to the normal state.
4	External short circuit	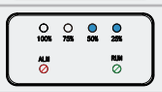	Please contact your dealer or technical support.
5	Over current		Please contact your dealer or technical support.
6	AFE error		Please contact your dealer or technical support.
7	Voltage sensor error		Please contact your dealer or technical support.
8	Temperature sensor error		Please contact your dealer or technical support.
9	Current sensor error	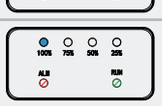	Please contact your dealer or technical support.

No.	Associated Address Error	LED & SOC Indicator	Troubleshooting
1	Timeout	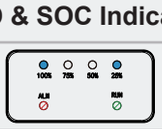	Please contact your dealer or technical support.
2	Error		Please contact your dealer or technical support.

CAUTION

If you meet other types of LED & SOC indicator that you cannot deal with, please contact your dealer or technical support.

07 System maintenance

7.1 Routine maintenance

To ensure that the system can operate properly for a long term, it is recommended to perform routine maintenance according to the description in this chapter.

CAUTION

Power off the system before cleaning the system, connecting cables and ensuring the grounding reliability.

Check Item	Check Method	Maintenance Period
Appearance status	Check that the battery module is not damaged or deformed.	Once every 6 months
System running Status	Check that the battery module does not generate abnormal sound when it is in operation.	Once every 6 months
Electrical Connection	Check that cables are secured and intact. In particular, the parts touching the metallic surface are not scratched.	The first inspection is 6 months after the initial commissioning. From then on, the interval can be 6 to 12 months.
Ground reliability	Check that ground cables are securely connected.	The first inspection is 6 months after the initial commissioning. From then on, the interval can be 6 to 12 months.

08 What to do in case of an emergency

In the event of any threat to health or safety, always begin with these two steps before addressing the other suggestions below:
1. Immediately contact the fire department or other relevant emergency response team.
2. Notify all people who might be affected and ensure that they can evacuate the area.

WARNING

Only perform the suggested actions below, if it is safe to do so.

8.1 In case of fire

The battery module may catch fire when heated about 150°C.
1. Press the Switch button (SW) to be OFF.
2. Turn off the breaker to the inverter.
3. Acceptable fire extinguisher types are CO_2 and ABC.

8.2 In case of flooding

1. Stay out of the water if any part of the battery module or any wiring is submerged.
2. Press the Switch button (SW) to be OFF.
3. Turn off the breaker to the inverter.
4. If possible, protect the system by finding and stopping the source of the water, and pumping water away.
5. Let the area dry completely before use.

8.3 In case of unusual noises

1. Press the Switch button (SW) to be OFF.
2. Turn off the breaker to the inverter.
3. Ensure that nothing is inside the case, then restart the system and if there are still unusual noises, please contact your dealer or technical support.

8.4 In case of unusual smell or smoke

1. Please ensure your safety first, then contact your dealer or fire department based on the actual situation to move to the next step.
2. Press the Switch button (SW) to be OFF.
3. Turn off the breaker to the inverter.
4. Ensure nothing is in contact with the battery system.

Your project.
Our support.

SALES & SERVICE

Wayton Energy Tech Co., Ltd.
tech@waytonenergy.com
www.waytonenergy.com

For model selection, quotations and service coordination, contact WAYTON.
Manufacturer technical specifications and applicable warranty terms remain unchanged.