WAYTON ENERGY TECH CO., LTD

CESC

USER MANUAL

All-in-One Outdoor Energy Storage System

Mercury 261CE

125kW/261kWh



CESC

Sales & service
Wayton Energy Tech Co., Ltd.
tech@waytonenergy.com
www.waytonenergy.com

USER MANUAL

MODEL:
Mercury 261CE

Contents

01 Overview 02
1.1 Scope of Application 02
1.2 Environmental Requirements 02
1.3 Care and Cleaning 02
1.4 Applicable Population Range 02
02 Explanation of Abbreviated Words 03
03 Security Precautions 03
3.1 Symbols In This Document 03
3.2 Overall responsibility for security 04
3.3 Maintenance of manuals 05
3.4 Battery Protection 05
3.5 Ground Fault Protection 06
3.6 Electrically charged measurements 06
3.7 Measuring equipment use 06
3.8 Complete power-down operation 06
3.9 Arc protection 07
3.10 Electrostatic protection 07
3.11 Product End-of-Life 08
3.12 Sand and moisture protection 08
3.13 Body Warning Label Protection 08
3.14 Protection of safety warning labels 08
3.15 Daily operation and regular maintenance 08
04 Transportation and Storage 09
4.1 Packaging 09
4.2 Transportation 10
05 Product Introduction 11
5.1 Key standards 11
5.2 Applications 11
5.3 Appearance 12
5.4 Structure 13
5.5 Electrical system 14
5.6 Communication system 14
Communication Topology Diagram of the Product 14
5.7 System performance parameters 15
5.8 Technical specifications of the key equipment of systems 16
06 Installation 25
6.1 Installation Precautions 25
6.2 Operational safety requirements 26
6.3 Lifting Operation 26
6.4 On-site installation site requirements 29
6.5 Foundation construction requirements 30
6.6 Other protective measures 32
6.7 Prepared tools 33
6.8 Safety Protection Products 33
6.9 Description of the installation process 34
07 Maintenance Guidelines 42
7.1 Maintenance Precautions 42
7.2 Periodic maintenance 42
7.3 Battery protection 45
7.4 Replacing electrical and electronic components 46
7.5 Fire extinguishing devices 46
7.6 Incident handling 46
08 Diagnosis of common abnormal problems 48
09 Warranty Instructions 50
10 After-sales service 50

Special Note

All information in this manual is subject to copyright and other intellectual property rights of CESC New Energy Technology Co., Ltd. This manual should not be modified, reproduced or copied, in whole or in part. The unauthorized use without prior written permission is strictly prohibited. CESC New Energy Technology.

Please read this entire document carefully before installing or using battery system. Failure to do so or to follow any of the instructions or warnings in this document can result in electrical shock, serious injury, or death, or can damage battery, potentially rendering it inoperable. Warranty claims are invalid if damage is caused by human error in a manner inconsistent with the installation manual's instructions.

The information included in this manual is verified to be accurate at the time of publication. However, due to the continuous improvement of products, this manual is subject to change without prior notice.

The illustrations in this manual are intended to help explain operating system configurations and installation instructions. Any confusion, please contact CESC immediately for advice and clarification. Thanks for you choice and your trust.

01 Overview

1.1 Scope of Application

The user manual describes the product specifications and application scenarios, mounting gas connections and operating instructions of each system of the Liquid Cooled Energy Storage Integrated Machine. The product includes the battery pack, the high-voltage box, the liquid cooler, the fire protection system, PCS, and the distribution system. For the avoidance of doubt, the Specification is only applicable to 125kW/261kWh product models.

1.2 Environmental Requirements

- Industrial and commercial energy storage liquid cooled battery systems are widely used in various application scenarios such as substation expansion, industrial and commercial enterprises, data centers, park energy storage, commercial buildings, large industries, charging stations, etc.
- Industrial and commercial energy storage liquid cooled battery systems should be installed in places that are not exposed to moisture, seismic activity, or marine environments as much as possible. If the installation environment needs to be exposed to damp, marine environments, or seismic activities, it is necessary to communicate and evaluate in advance whether it is feasible to avoid adverse consequences.
- Flammable and explosive materials are strictly prohibited from accumulating around the battery systems, and fire emergency equipment should be equipped.
- Mercury 261CE is capable of charging and discharging within the operating temperature range specified below. At the extremes of the temperature range, Mercury 261CE may limit charge or discharge power to improve battery lifespan.

Charging Operating Temperature	0 ℃~55 ℃
Discharging Operating Temperature	-25 ℃~55 ℃
Recommended Storage Temperature	≤35 ℃
Storage temperature	-20 ℃~50℃
Working humidity range	0-95%

1.3 Care and Cleaning

It is installed outside, keep the sides of Mercury 261CE clear of leaves and other debris to maintain optimal airflow.

1.4 Applicable Population Range

This manual is intended for personnel involved in the transportation, installation and other operations of this product. Participants must meet the following requirements:

- Proficient in electrical, electronic, mechanical engineering and other professional knowledge, good command of electrical schematics, structural drawings and other understanding;
- Understand the basic knowledge, working principle and control logic of all products and components in the energy storage industry;
- Have the professional electrician construction certificate and qualification recognized by the law of the region where this product is used, familiar with the relevant laws and regulations of this region;
- Have the ability to deal with emergency incidents, according to the laws and regulations of the region where this product is used;
- Proficient in the terms of this manual, with professional skills and a high sense of responsibility.

Mercury 261CE EN

02 Explanation of Abbreviated Words

BMS	Battery Management System
BMU	Battery Management Unit
BCU	Battery Cluster Management Unit
BOL	Begin of Life
CAN	Controller Area Network
EOL	End of life
HV	High Voltage
LV	Low Voltage
OCV	Open Circuit Voltage
SOC	State of Charge
PCS	Power Conversion System

03 Security Precautions

3.1 Symbols In This Document

This manual uses the following symbols to highlight important information:

	WARNING
	CAUTION
	RISK OF ELECTRIC SHOCK
	REFER TO OPERATING INSTRUCTIONS
	DO NOT THROW AWAY
	RECYCLABLE
	PROTECTIVE CONDUCTOR TERMINAL
	NO OPEN FLAMES
	RISK OF ELECTRIC SHOCK, ENERGY STORAGE TIMED DISCHARGE.
	POSITIVE LEVEL
	NEGATIVE LEVEL
	CAUTION Pay attention to the risk of hearing loss and wear hearing protection devices

3.2 Overall responsibility for security

DANGER

- The energy storage system is a high-voltage system, and it is strictly prohibited to install, use and operate the energy storage system under severe weather such as lightning, rain, snow, and winds of grade 7 or above.
- Installation, wiring, maintenance and replacement of parts and other operations with electricity are prohibited; the power cord will generate an arc or spark that will lead to fire or personal injury the moment it touches the conductor.
- Only professional personnel familiar with local laws, regulations, standards and electrical systems, who have received professional training and are familiar with the knowledge related to this product, are allowed to operate the energy storage system.
- If obvious defects, damages or missing parts are found in the electric cabinet box or battery box, do not use it and contact professional after-sales personnel.
- Do not disassemble or modify any part of the battery box or cabinet box without official authorisation from the product.
- Damage to the battery may result in electrolyte leakage; if the electrolyte leaks, do not touch the leaked electrolyte and volatile gases, take proper precautions and contact the after-sales service centre immediately for assistance.
- Do not place the battery around high temperature, high pressure or heat generating equipment.In case of flooding, do not use flooded batteries, please contact your local battery recycler for disposal.
- In case of fire, please switch off the power of the equipment under the condition of ensuring safety.

Warnings

- In case of inhalation of leaked substance, evacuate from contaminated area and seek immediate medical help.
- In case of eye contact, flush with water for at least 15 minutes / In case of skin contact, wash the contact area thoroughly with soap and water / In case of accidental ingestion, induce vomiting and seek medical assistance immediately.
- If you need to replace or add batteries, please contact the after-sales service centre, do not disassemble the mobile battery system.
- The permission of the relevant authorities in your country must be obtained before connecting to the network.
- It is prohibited to compile or decompile other derivative work on the equipment and to steal the intellectual property rights of the equipment.
- Grounding equipment must be connected to the wire when installing, please remove the earth wire last when removing the equipment.
- Waste batteries, please do not dispose of them as general waste rubbish, so as not to cause environmental pollution, please contact the battery recycling company for scrapping, please refer to the local laws and regulations.

Mercury 261CE EN

Attention

- It is important to store for transport as required to ensure that the energy storage system is not damaged during transport and storage.
- Care and consideration should be given to the weight of the battery or cabinet box when lifting it. Gloves are required when handling batteries.
- Do not hit, pull, drag or step on the equipment and do not place extraneous objects in any part of the battery module.
- Transport must be carried out by trained professionals and operations during the process must be documented. Ensure that the equipment is placed securely and not tilted; tipping of the equipment may result in damage to the equipment or personal injury.
- Make sure that liquid carbon dioxide, Novac 1230 or FM-200 fire extinguishers are available near the equipment.
- When extinguishing the fire, please use fire extinguishers made of the above recommended materials, water or ABC dry powder extinguishers cannot be used to extinguish the fire; firefighters must wear protective clothing and self-contained breathing apparatus.
- When the ambient temperature exceeds 150°C, the battery is at risk of explosion.
  When installing and maintaining heavy equipment, please use appropriate tools and take protective measures to avoid scratching the cabinet; if the cabinet is scratched, please repair it in time to prevent the cabinet from rusting.
- Use special insulated tools when performing high-voltage operations.
  Cables used in high temperature environments may cause aging and damage to the insulation layer, the distance between the cable and the periphery of the heat generating device or heat source area is at least 30mm.
- Cables of the same type should be tied together, and cables of different types should be placed at least 30mm apart, and it is forbidden to twist or cross each other.

3.3 Maintenance of manuals

The product manual is an essential part of the product. The manual contains important information about the transport, installation, servicing and maintenance of the product.

Be sure to read this manual carefully before transporting, installing, servicing, or maintaining the product.

(1) Strictly follow the instructions and precautions for transporting, installing, overhauling, and maintaining the product as described in this manual; otherwise, damage to equipment, injury or death, or property damage may result.

(2) Please keep this manual in a safe place to ensure that it is readily available to staff during transport, installation and operation.

3.4 Battery Protection

DANGER

- This product contains high voltage! Danger of electric shock!
  The batteries in the system generate a high voltage when connected. If touched accidentally, there is a risk of electric shock or even life-threatening injury.
- When performing operations such as installation, maintenance and overhaul of the equipment, make sure that:
  (1) All storage batteries are completely disconnected and remain disconnected for 20 minutes.
  (2) Clear warning signs are placed at the disconnection points of the storage batteries to ensure that they cannot be accidentally reconnected.

3.5 Ground Fault Protection

DANGER

- In the event of a ground fault or irregular grounding of the integrated energy storage system, fatally high voltages may be present in otherwise uncharged parts. This is very dangerous if accidentally touched!
- Before operating, make sure that the system grounding is free of faults and that the relevant protective measures are in place and that the grounding is correctly installed in accordance with local standards.

3.6 Electrically charged measurements

DANGER

- Energy storage integrated system equipment in the presence of high voltage, accidental contact may be fatal electric shock danger, in the charged measurement must comply with the following requirements:
  (1) Do protective work (such as wearing insulated gloves rubber shoes, etc.).
  (2) At least one professional must accompany the measurement operation to ensure personal safety.

3.7 Measuring equipment use

DANGER

- In order to ensure that the electrical parameters meet the requirements during electrical connection and commissioning of the integrated energy storage system, it is necessary to use relevant electrical measuring equipment.
  (1) Select high-quality measuring equipment that meets the requirements of the site in terms of range and operating conditions.
  (2) Ensure that the measuring equipment is correctly connected and that it is used in a proper and standardised manner so as not to cause electric arcs or other hazards.
  (3) If the measurement is carried out with electricity, it should be well protected (e.g. wearing insulated gloves, etc.) and accompanied by at least one professional person.
- It is important to ensure that the equipment and systems within the Energy Storage Integrated System are completely unpowered before carrying out any operations on the Energy Storage Integrated System.

3.8 Complete power-down operation

DANGER

(1) Ensure that equipment that has been de-energised will not be accidentally re-energised.
(2) Use a multimeter to ensure that the equipment is completely unpowered.
(3) Ensure that proper grounding is necessary.
(4) Ensure that escape routes are clear throughout the operation.
(5) Use insulating material to cover potentially live parts adjacent to the operating section.
(6) Ensure that the EIS is completely de-energised and confirm this by measuring with a multimeter.
(7) Always wait at least 20 minutes after the EIS has been completely de-energised before operating the EIS.

Mercury 261CE EN

3.9 Arc protection

- For the protection of personnel safety and equipment, operation of this product must be carried out in strict compliance with the descriptions in this manual.
- In case of improper operation, it may cause an arc hazard or even other risks such as fire and explosion.

Warnings

The following improper operation may cause electric arc, fire, explosion and other hazards inside the machine. Always remember that accidents must be handled by qualified professionals.

Improper operation for existing accidents may cause a wider range of malfunctions or accidents.

(1) Electrically plugging and unplugging the high voltage fuse on the DC side of each device.

(2) Touching potentially energized cable ends that are not insulated.

(3) Mistakenly touching potentially electrically charged wiring strips, terminals, or other parts of the machine.

(4) Loose power cable connections.

(5) Metal parts such as screws inadvertently dropped inside the power module.

(6) Improper operation by untrained and unqualified operators, etc.

Warnings

Before operating the equipment, the risk of electric arcs in the area where the equipment is to be operated must be assessed in advance. If an arc risk exists, it is required that:

(1) Operators must be pre-trained in relevant safety training and be allowed to work only after they have passed the training.

(2) Areas where electric shock may occur are assessed as far as possible.

(3) Compliant protective clothing must be worn before operating in areas where electric shock may be present

3.10 ectrostatic protection

Warnings

Contact or improper handling of printed circuit boards or other static-sensitive components can result in device damage.

(1) Avoid unnecessary contact with the circuit board.

(2) Observe static protection practices, such as wearing an anti-static hand strap.

3.11 Product End-of-Life

- When the Energy Storage Integration System or internal separate equipment needs to be discarded, it must not be disposed of as regular scrap.
- Some components of the internal machine can be recycled for reuse, and at the same time, some components can cause pollution to the environment.
- Please contact your local authorized professional recycling agency for proper disposal of the product and internal components.

3.12 Sand and moisture protection

⚠ Warnings

In case of severe weather such as sandstorms, thunderstorms, high winds, hail, etc., or when the relative humidity of the surrounding environment is greater than 95%, please do not open the cabinet door of the Energy Storage Integrated System. After the bad weather is over, please treat the surrounding environment in time.

3.13 Body Warning Label Protection

⚠ Warnings

The warning labels on the body of the product and the electrical equipment inside contain important information for safe operation of the product and the equipment inside. Do not remove or damage them!
(1) Ensure that the body warning labels are always legible.
(2) Replace damaged or obscured warning labels immediately.

3.14 Potection of safety warning labels

⚠ Warnings

When transporting, installing, servicing, maintaining, etc. the integrated energy storage system on site, the following precautions should be observed in order to prevent unintended persons from approaching the system and accidentally operating it
:(1) Place visible warning signs on the front and rear door switches of the ECS to prevent accidental opening of the switches.
(2) Place warning signs or safety tape near the operating area to prevent uninvolved persons from approaching.

3.15 Daily operation and regular maintenance

- During daily operation, make sure that the doors of the integrated energy storage system and the internal equipment cabinets are closed and locked, and that the keys have been removed and handed over to a person for safekeeping for subsequent use.
- In order to avoid accidents caused by unauthorized personnel entering the machine, or the internal equipment being rained on or attacked by animals.

- At the same time, should also be regularly on the integrated energy storage system and internal equipment for regular inspections and maintenance to ensure that the integrated energy storage system for long-term reliable operation.

⚠ Warnings

If work is to be carried out with the EIS energized, it is important that it is well insulated and that at least two people are present at the site at the same time.

The installation of the integrated energy storage system is usually located in a field environment away from urban areas, and field ambulance facilities should be prepared as necessary to provide assistance if required.

In the course of daily operation and regular maintenance, it is also necessary to pay attention to the following items at all times:
(1) Avoid overhauling, maintenance and other operations on the equipment of the Energy Storage Integrated System under rainy or humid weather conditions. The intrusion of moisture may damage the electrical equipment.
(2) Warning labels and nameplates are affixed to each piece of electrical equipment of the Energy Storage Integrated System. The nameplates contain important information about the parameters of the equipment, and care should be taken to protect them when performing operations on them.
(3) Some of the equipment in the integrated energy storage system may have heat-generating devices that remain at a high temperature after the equipment stops working. Wear anti-scald gloves when handling such devices.
(4) The power units and cooling fans in the integrated energy storage system may generate noise during operation, which may increase when the equipment malfunctions. It is recommended that noise-proof earplugs be worn when in close proximity to the Energy Storage Integration System.
(5) Observe all installation requirements for the fire protection system and perform periodic maintenance to ensure that the fire protection system is operational.
(6) Where necessary, provide suitable protective equipment, e.g. goggles, insulated gloves, insulated shoes, etc., and use all necessary aids to ensure the safety of personnel and equipment.

04 Transportation and Storage

4.1 Packaging

The system is packaged as a whole to ensure that the product is well protected from any harmful gases, chemical contamination, static electricity, moisture and mechanical damage during handling, transport and storage. The name of product, specification, production date, quantity and lot number have been labeled on the packaging box.

4.1.1 Packing steps

Packing steps and related technical requirements

1) Mercury 261CE and wooden pallet are fixed with bolts.
2) Place EPE on top of Mercury 261CE.
3) Mercury 261CE is covered with PE bag.
4) Aluminum foil bag vacuum packing, including aluminum foil film at the bottom.
5) The surface of Mercury 261CE is wrapped with 5mm thick pearl cotton.
6) Mercury 261CE is wrapped with winding film.
7) Using packing tape to fix Mercury 261CE and the base.

4.1.2 The composition of packaging materials

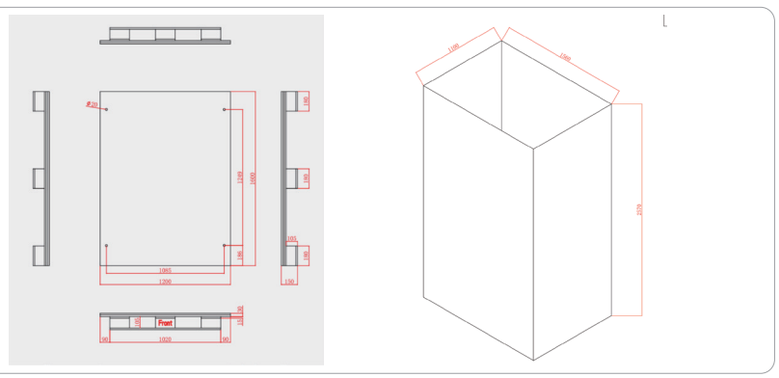

pallet PE bags and Aluminum foil bags

4.1.3 Schematic diagram of finished packing

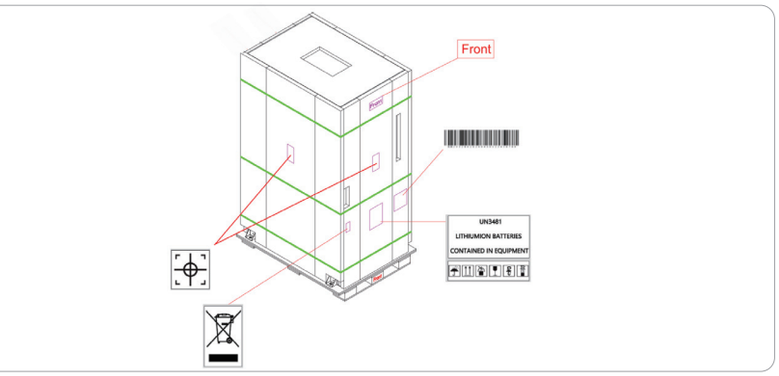

4.2 Transportation

- Trucks and shipping are preferred as means of transport while shelter and sun protection should be guaranteed during transportation. Please load and unload in a civilized way. Packing boxes with products inside can be transported by any means of transport. Batteries shall be handled with care in the middle of loading and unloading. Be cautious of throwing, rolling over and heavy pressure. Avoid direct contact with rain, snow and mechanical impact.

4.2.1 Requirements for Battery Systems Transport Environment

- Based on battery features and with the purpose of maximizing the battery performance, the transport and storage of battery packs should meet the following requirements:

Recommended storage temperature	≤35℃
Allowable storage temperature	-20~50℃
Humidity	<95% (no condensation).s

4.2.2 Requirements for Battery Systems Transport

(1) Check before loading of battery rack into container

1) Before loading into container, it is necessary to check the outside and inside of the container to ensure the cleanliness of the inside, and the inside shall be equipped with hooks;

2) Before loading into container, check the package and external label of the cargo to ensure the integrity of external package.

(2) Loading of battery systems into container

1) The forklift matched with the battery rack load shall be used in operation and shall pass the annual inspection. The forklift shall not move during lifting;

2) The weight of a battery rack is high. The container shall be stuffed with filling material and the tie belt shall be used to fix the battery rack in a container;

3) After being loaded into a container, the warehouse head shall recheck the tie belt and protection and then notify to release after confirmation.

(2) Battery systems transport

1) The high-speed driving speed of the vehicle shall not exceed the speed specified by traffic laws, and the bumpy road section shall be avoided as far as possible;

2) It is forbidden to brake and make sharp turns when the vehicle is driving;

3) Keep the car in good condition, check the carrying situation of the car frequently. If problems are found, feedback and solve in time.

(4) Unloading of battery systems

Provide the packing list to the client for preparing proper unloading tools.

05 Product Introduction

The Liquid Cooled Energy Storage Integrated Machine adopts the long-life lithium iron phosphate battery cell design and the efficient intelligent liquid cooling temperature control design, controlling the temperature difference of the energy storage system within 5 ℃ and increasing the battery life by 15%; It adopts the multi-level disconnection design for battery pack and battery cluster, the system compartment design and the advanced three-level intelligent fire safety design, achieving the ultimate safety of the storage system; In addition, it adopts the intelligent BMS systems, achieving VPP, intelligent demand regulation, real-time response to power grid scheduling and other functions.

5.1 Key standards

- IEC 62619:2022 certificated
- IEC 63056:2020 certificated
- EN 62477-1:2012/A12:2021
- EN IEC 61000-6-2:2019, EN IEC 61000-6-4:2019

5.2 Applications

5.2.1 Utility & Grid applications

- Ancillary Services
- Energy Shifting

5.2.2 Commercial & Industry Applications

- Increase Savings
- Peak Shaving
- Load Shifting
- Demand Response
- Backup Power
- Solar Self Consumption
- EV - Charging carport

5.3 Appearance



Product Appearance

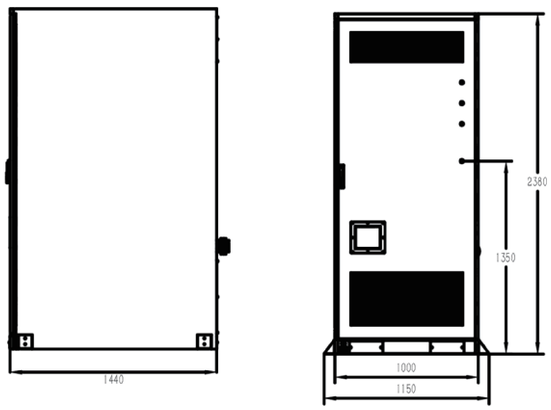

Product Dimensions

5.4 Structure

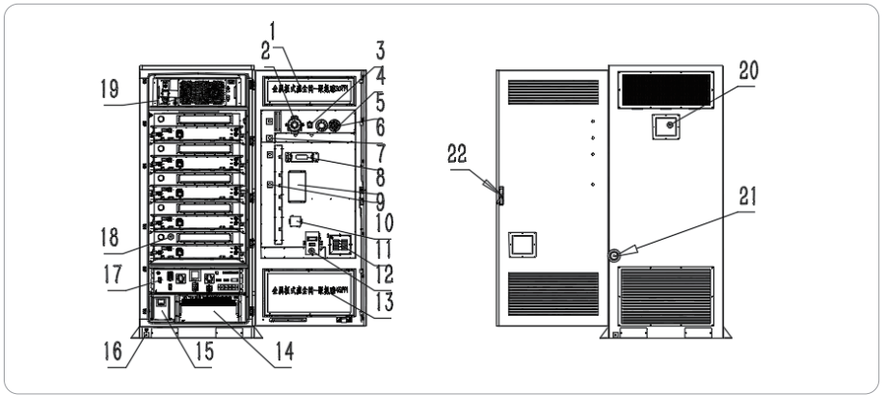

Schematic Diagram of the Product Structure

Name of System Components

S/N	Name	S/N	Name
1	Air inlet of the liquid cooler	12	Dehumidifier
2	Hydrogen detector	13	PCS air inlet
3	Relay	14	PCS
4	Fire temperature detector	15	UPS
5	Fire smoke detector	16	Earth connection point
6	Indicator	17	High-voltage control box
7	Aerosol fire extinguisher	18	Battery module
8	EMS	19	Water cooler
9	Emergency stop button	20	Fire exhaust fan
10	4G module	21	Fire water filling nozzle (KN65)
11	Fire inlet fan	22	Front door lock

5.5 Electrical system

Electrical schematic diagram of the system is shown below:

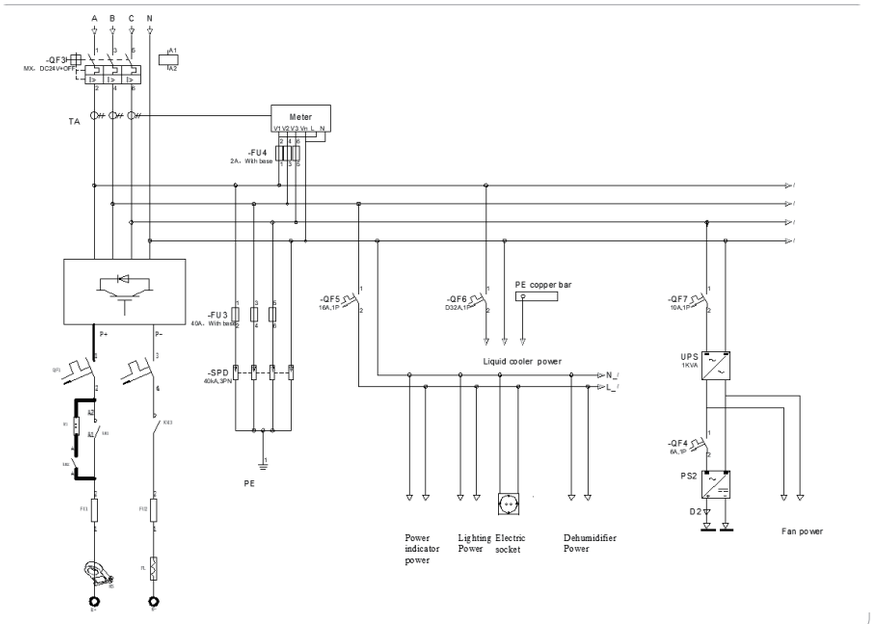

Electrical Schematic Diagram of the Product

5.6 Communication system

Communication Topology Diagram of the system is shown below:

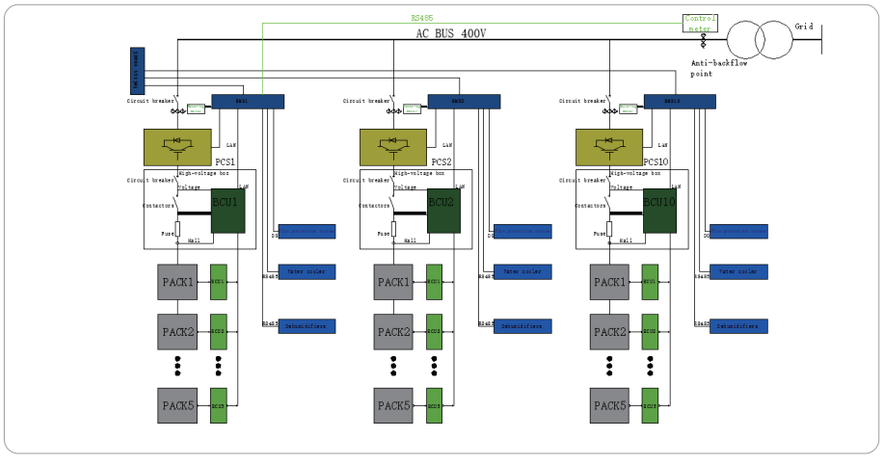

Communication Topology Diagram of the Product

5.7 System performance parameters

Serial number	Critical items	Specification
1	Battery type	Lithium iron phosphate (LFP)
2	Rated capacity	314Ah
3	Rated energy	261kWh
4	DC rated voltage	832V (25℃±2℃)
5	DC working voltage range	728V~936V
6	Rated power	125kW
7	AC output voltage	230/400V
8	Charging and discharging mode	Constant power
9	Power of liquid cooler	5kW
10	Battery self discharge rate	≤3%/month (25℃, 50%SOC)
11	Factory state of charge	30%-40%SOC
12	Way of fire protection	PACK grade aerosol + cluster grade aerosol + cluster grade water fire protection
13	IP rating	IP55
14	System Maximum Efficiency	89%
15	Altitude	<2000m
16	Operating temperature	0 ℃~55 ℃ (charging), -20℃～50℃ (discharging)
17	Storage temperature	-20℃~50℃
18	Operating humidity	≤95%RH
19	Weight	2700±50 kg
20	Dimensions (W*D*H)	(1150.0±5)*(1440.0±5)*(2380±5.0) mm
21	Installation position	Outdoor

5.8 Technical specifications of the key equipment of systems

5.8.1 Battery pack

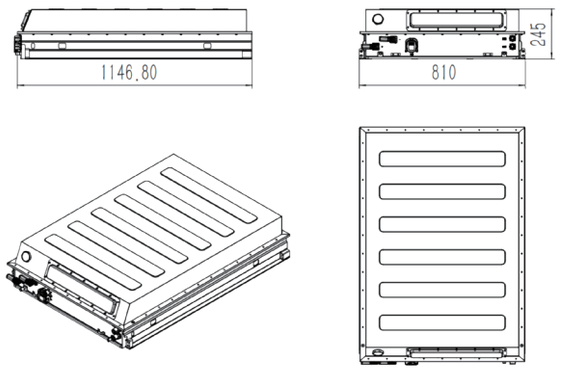

Schematic Diagram of Battery Pack

Specifications of Battery Pack

S/N	Item	Specifications
1	Series or parallel connection mode	1P52S
2	Nominal voltage	166.4V
3	Rated capacity	314 Ah
4	Rated energy	52.25kWh
5	Discharge cut-off voltage	145.6V
6	Charge cut-off voltage	187.2V
7	Max. Charge current	192A
8	Max. Discharge current	192A
9	IP Rating	IP67
10	Equalization mode	Active equalization
11	Insulation resistance	≥10MΩ
12	Dimension（L*W*H）	(1146.8±5) * (810±5) * (245±5) mm
13	Weight	340±5kg

5.8.2 High-voltage distribution cabinet

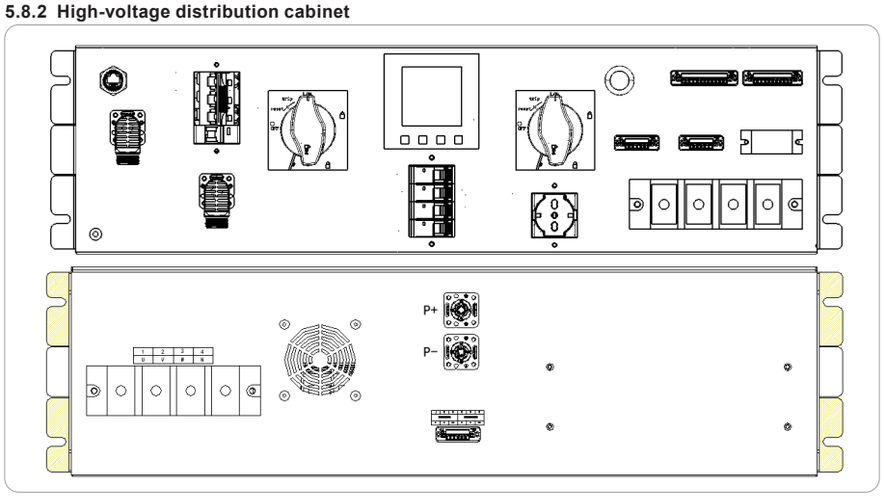

Schematic Diagram of High-voltage distribution cabinet

S/N	Name	Label		Feature description1P52S
1	QF4	AC power switch		Air switch for AC power
2	QF5	Other power switch		Air switch for Other power
3	QF6	Liquid cooler power switch		Air switch for Liquid cooler power
4	QF7	UPS power switch		Air switch for UPS power
5	Electric socket	AC220V		AC Electric socket
6	QF2	DC power switch		Air switch for DC power
7	QF1	DC main circuit switch		DC connection switch
8	QF3	AC main circuit switch		AC connection switch
9	Ethernet port	LAN		BMS Ethernet communication port
10	Meter	Meter		Charging and discharging power metering
11	1	BMU	+	BMU power supply
	2		-	
	3		CANH	BMU communication input
	4		CANL	
	5		ADD	BMU addressing port
	6		NC	

S/N	Name	Label		Feature description1P52S
12	1	BCU	CANH	BCU communication CAN port
	2		CANL	
	3		GND	
	4	Meter	RS485A	Meter communication port
	5		RS485A	
	6		GND	
13	1	Power indicator	L	Power indicator light
	2		N	
	3	Lighting	L	Lighting lamp power
	4		N	
	5	Dehumidifier	L	Dehumidifier power supply
	6		N	
	7	Fire fan	L	Fire power supply
	8		N	
	9		NC	/
	10		NC	/
14	1	FI	+	Fire power supply
	2		–	
	3	EMS	+	EMS power supply
	4		–	
	5	Reserve	+	Reserve power supply
	6		–	
	7	BMS	DO9+	BMS passive fault output signal
	8		DO9-	
	9	EPO	1	Emergency Stop Input
	10		2	
	11	Breaker trip	MX+	AC circuit breaker split excitation trip
	12		MX-	

S/N	Name	Label		Feature description1P52S
15	1	Liquid cooler	L	L line for power supply of liquid cooler
	2		N	N line for power supply of liquid cooler
	3		PE	Grounding wire of liquid cooler
	4		NC	/
16	1	UPS	Lin	UPS Intput power
	2		Nin	
	3		PE	
	4		Lout	UPS Output Power
	5		Nout	
	6		PE	

5.8.3 Rechargeable Li-ion Battery System

Model no. Mercury 261CE combined with 5 battery packs and one High-voltage distribution cabinet.

5.8.4 Liquid cooler

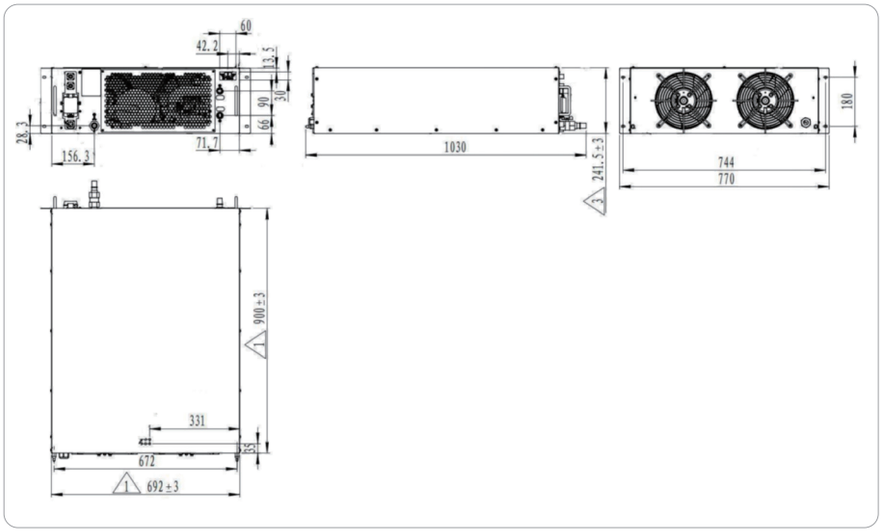

Schematic Diagram of Liquid Cooler

Schematic Diagram of High-voltage distribution cabinet

S/N		Item	Parameter
1	Parameter	Rated voltage (V)	AC 220V ±10%
2		Rated frequency (Hz)	50/60
3		Rated refrigerating capacity (kW)	5.0
4		Cooling power power (kW)	2.0
5		Cooling current（A）	9.3
6		Add heat(kW)	2.0
7		Heating power (kW)	2.2
8		Heating current（A）	10.3
9		Water supply pump power (W)	200
10		Rated flow (L/min)	30
11		Size of water inlet and outlet (mm)	NW22
12		Liquid temperature setting range（℃）	15～35
13		Liquid temperature control accuracy（℃）	±1
14		Ambient temperature（℃）	-30～50
15		Refrigerant (kg)	R410A
16		Noise (dB)	≤72
17		Protection grade	IP55
18		Net weight (kg)	≤70
19		Outer dimension (mm)	WxDxH: 700x900x245
20		Applicable cooling medium	Ethylene glycol aqueous solution with the concentration ≤60%

5.8.5 Fire protection system

5.8.5.1 Explosion-proof exhaust system

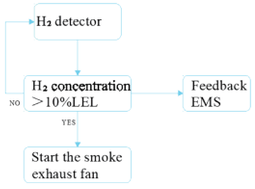

S/N	Item	Parameter
	H2 detector	
1	Rated voltage	DC24V
2	Ranges Available	0-100% LEL
3	Operating temperature range	-40℃~+70℃
	Explosion-proof smoke exhaust fan	
1	Rated voltage	AC220V 50Hz
2	Maximum air volume	106CFM±10%
3	Protection level	IP66
4	Operating temperature range	-40℃~+80℃
	Explosion-proof inlet fan	
1	Rated voltage	DC24V
2	Protection level	IP66
3	Operating temperature range	-40℃~+80℃

5.8.5.2 Automatic fire extinguishing system

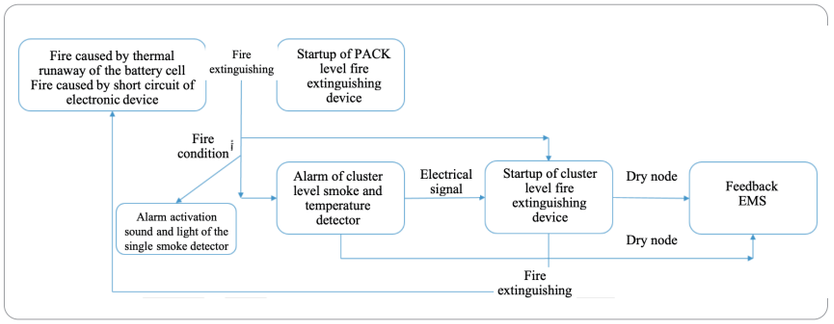

Schematic Diagram of Fire Protection

Main Technical Parameters of Fire System

S/N	Unit	Content	Specifications
	Fire extinguishing device	Electrically activated	Electrically activated
		Feedback signal	Passive switching signal
		Size	Φ76×192mm
		Operating temperature range	-40℃~+54℃
1	Temperature Sensor	Supply voltage	9~33V
2		Quiescent current	24V: 55μA
			9V: 50μA
3		Alarm voltage	6 V ~ 28 V
4		Alarm current	24V: 52mA
			9V: 17mA
5		Storage temperature	-30℃ ~ +80℃
6		Operating Temperature	A1R: -20℃ ~ +50℃
7		Ambient Humidity	0-95%RH Non-condensing
8	smoke detector	Supply voltage	9~33V
9		Quiescent current	30 - 50 μA at 24 V
10		Alarm voltage	6 V ~ 28 V
11		Normal alarm current	61 mA at 28 V
			52 mA at 24 V
			18 mA at 10 V
		Operating Temperature	-20℃~+60℃
12		Ambient Humidity	0-95%RH Non-condensing

Aerosol fire extinguishing system produces a large number of fireextinguishing media, which are mainly composed of ultra-fine potassium salt particles andinert gas. After a long period of continuous verification and application, potassium salt hasbeen recognized as one of the most effective fire extinguishing agents. Its mainfire-fighting mechanisms can be divided into four categories: isolation, suffocation, coolingand chemical suppression. Several fire-fighting mechanisms interact and combine tosuppress the fire, without any negative impact on the environment。

5.8.6 PCS

Schematic Diagram of PCS

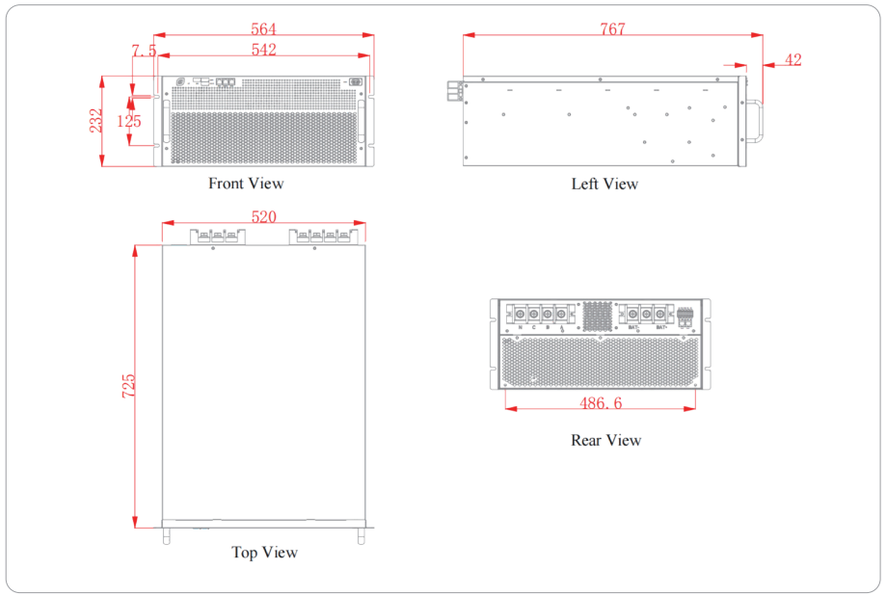

Technical Parameters of PCS

S/N	Item	Parameter
	DC side	
1	DC voltage range	DC 650V～950V
2	Maximum DC current	203A
3	Rated DC power	125kW
4	Voltage-limiting characteristics	Possession
5	Current limiting characteristic	Possession
	AC grid connection parameters	
1	Rated output power	125kW
2	Rated voltage	AC230V/400V
3	MAX output current	200A
4	Voltage range	-15%～+15%
5	AC connection method	3W+N+PE
6	Grid frequency	50Hz/60Hz
7	Power factor	0.99/-1～1
8	THDi	≤2%（Rated power）
	AC off-grid parameters	
1	AC off-grid voltage	230V/400V
2	Rate output power	125kW
3	AC off-grid frequency	50/60Hz
4	THDv	≤3% (linear load)
5	MAX output current	200A
	Other parameters	
1	Maximum conversion efficiency	98.5%
2	Permissible environmental Temperature	-30℃～+55℃（Derating above 45℃）
3	Allowable relative humidity	0~95%RH
4	Ingress Protection	IP20
5	Dimension	W520mm×H232mm×D725mm
6	Weight	64.5Kg
7	Cooling Method	Forced air cooling

06 Installation

The battery system is a high-voltage energy storage device, which is regarded as dangerous goods; operation and use by non-professional persons or improper operation and use of it might result in severe consequences, e.g. electric shock, combustion and explosion. The battery system must be installed and maintained by professional technicians and used in strict accordance with the relevant safety provisions.

6.1 Installation Precautions

⚠ Warnings

Don't install the product on the roof or directly on-ground. Building a foundation or structural steel base is mandatory before installation.

The integrated energy storage system is a high-voltage energy storage device, non-professionals and improper operation and use may cause the battery system electrocution, combustion, explosion and other serious consequences.

The installation and maintenance of the integrated energy storage system must be operated by professional and technical personnel, and the use of the system must strictly comply with the relevant safety regulations. It is strictly prohibited for non-professionals to install, maintain and abuse the energy storage system beyond the scope.

（1）When installing the integrated energy storage system, users should check whether the connection box, the main control box and the relevant lines are smooth, including whether the contact of each contact point is good, so as to avoid the introduction of disconnection or short-circuit failure.

（2）When the user installs the integrated energy storage system, he/she should check in advance that the grounding equipment is good and effective.

（3）Energy storage system installation requirements:

The integrated energy storage system needs to be installed on the ground with sufficient load-bearing capacity and flatness; if the ground does not have sufficient support and flatness, it needs to be ensured by other means (e.g. making foundation).

Battery outdoor cabinets need to be installed with enough space for opening the door.

Avoid placing in sunlight, rain or humid places.

Do not place anything above the control cabinet.

Avoid installing near high temperature heat source or low temperature cold source environment (-20~40 environment is preferred).

Do not place in the place containing corrosive gas or liquid.

Avoid installing in a strong interference environment.

Do not install in sites accessible to children.

Avoid installing in the area that is prone to waterlogging.

Do not place flammable, explosive or corrosive objects around the equipment.

6.2 Operational safety requirements

In order to safely and effectively install the system, the installer must be familiar with the contents of this document and all warnings and be qualified by professional training before starting work.

(1) This product is a high-voltage device, when operating and maintaining this product, please take proper personal protection measures and follow the high-voltage code of practice. If you need to handle the battery directly, please wear insulated rubber gloves.

(2) For the safety of children, please place appropriate warning signs around the Energy Storage Integrated System.

(3) When touching the battery system, please avoid touching exposed metal parts.

(4) To prevent static electricity build-up, service personnel should perform a human electrostatic discharge before handling the battery.

(5) Do not place tools or metal parts, etc. on top of or inside the Energy Storage Integrated System.

(6) Do not touch all terminals with hands or other metal objects at any time to avoid electric shock or short circuit.

(7) Do not step on or sit on the battery system.

(8) Do not short-circuit the positive and negative terminals of the battery directly, as this may cause leakage, heating and rupture of the battery.

(9) Unauthorized alteration of the battery is strictly prohibited. A protection system is installed in the battery to prevent danger. If the protection system is damaged, charging and discharging may not be controlled, the Or the charge/discharge current may exceed the set boundary value, which may cause the battery to leak, heat up and rupture.

(10) It is strictly prohibited to cover the battery system and any air inlet or outlet during charging and discharging. Otherwise, heat generated will build up, battery performance will deteriorate, and fluid leakage will occur.

6.3 Lifting Operation

6.3.1 Lifting Precautions

⚠ Warnings

- Throughout the lifting process, strictly adhere to the crane's safety operating procedures;
- Do not stand within 10 meters of the operation area, especially under the lifting arm or the machine being lifted or moved, to avoid personal injury;
- Stop lifting in severe weather conditions such as heavy rain, fog, or strong winds.

Pre-Lifting Preparation

(1) Crane Preparation:

The hoisting ring was not installed at the top lifting position before leaving the factory. First, remove the bolts at the top hoisting ring position, take out the attached hoisting ring, and install it at the reserved position on top, ensuring it is securely fastened.

The total weight of the equipment (including packaging) is approximately 3 tons. Select a crane with an appropriate lifting capacity based on the equipment's total weight and on-site conditions. The selection of lifting equipment must be guided by professionals according to the lifting distance and height at the site.

(2) Lifting Tools Preparation:

Prepare wire ropes, shackles, support columns, etc.

Lifting Procedure

(1) During loading and unloading, use a crane with the appropriate tonnage. Nylon lifting straps (or belts) may be used for lifting;

(2) The lifting process must strictly follow the lifting diagram. Refer to Figure for details;

(3) Lift vertically, Lifting angle < 30°. Do not drag the equipment on the ground or any surface;

(4) After lifting the cabinet 300 mm off the ground, pause for 30 seconds and check the connections of the lifting tools, the cabinet tilt angle < 3°, Confirm they are secure before continuing;

(5) Perform the lifting slowly, lifting speed < 0.2m/s, acceleration < 0.1m/s. Monitor the balance of the cabinet and avoid rapid movements;

(6) During the entire lifting process, do not stand under the outdoor cabinet or the crane.

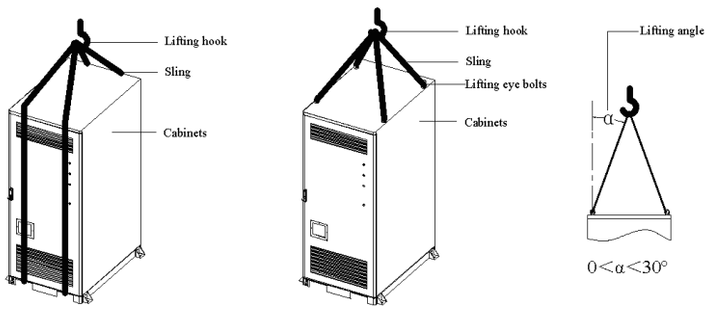

Lifting Operation Diagram

6.3.2 Forklift Operation

(1) When using a forklift, the following conditions must be met:

(1) The forklift must have sufficient load capacity (recommended at least 5 tons);

(2) The forklift forks must be fully inserted into the integrated cabinet, i.e., the fork length should be at least 1500 mm. Refer to Figure for the forklift hole diagram of the integrated cabinet.

(3) During lifting, lowering, and moving, ensure the forklift operates slowly and steadily. Conduct a test run if necessary;

(4) For safety during forklift loading, it is recommended to secure the integrated cabinet with safety straps connected to the forklift beam. Refer to Figure for specific forklift operations:

⚠ Warnings

- During transportation and handling, always keep in mind all parameters of the energy storage system.
- Packaging dimensions (W×D×H): 1600×1500×2520 mm
- Weight: Approximately 2800 kg

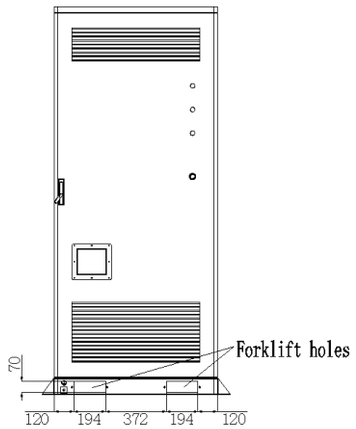

Forklift Hole Diagram

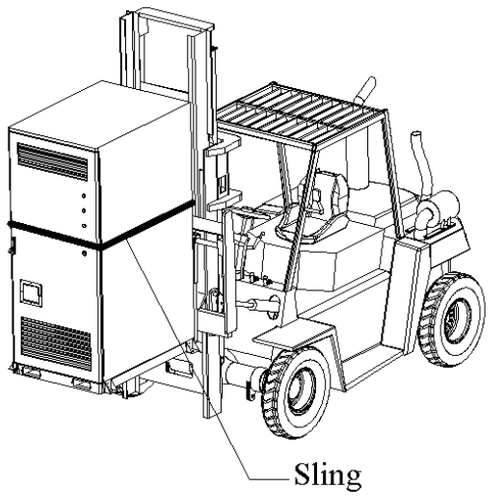

Energy Storage Integrated Unit Lifting Diagram

6.4 On-site installation site requirements

6.4.1 Installation Requirements

The energy storage equipment must be installed on a concrete or other non-combustible surface. The installation plane must be level, solid, flat, and capable of bearing sufficient load. Avoid depressions or inclinations.

When constructing the foundation, consider the equipment's wiring requirements and reserve trenches or other wiring holes for the outlets.

The equipment adopts a bottom outlet design, requiring a trench for discharge. The trench must meet the following requirements:

（1） The pit bottom of the foundation must be compacted and filled.

（2） The foundation must provide effective load-bearing support for the integrated energy storage system.

（3） The EIS must be elevated to prevent rainwater from eroding its bottom and interior. The foundation should be approximately 300 mm above the installation site ground.

（4） Drainage measures must consider local geological conditions.

（5） Construct a concrete foundation with sufficient cross-sectional area and height. The height should be determined by the builder based on site conditions.

（6） During foundation construction, clear excavated soil immediately to avoid hindering subsequent lifting of the integrated energy storage system.

（7） Build a maintenance platform around the foundation for future servicing.

（8） Reserve sufficient space for AC/DC-side cable conduits during foundation construction, based on the cable entry/exit positions and dimensions of the battery outdoor cabinet.

（9） Determine the specifications and quantity of conduits based on cable types and entry/exit points.

（10） Temporarily seal both ends of all embedded conduits to prevent debris entry, which could complicate later wiring.

（11） After connecting all cables, seal the entry/exit points and joints with fireproof mud or other suitable materials to prevent rodent intrusion.

（12） Prefabricate grounding devices according to the relevant standards of the project's country/region.

6.4.2 Equipment Ventilation Requirements

The operation of the energy storage equipment generates significant heat. Excessive temperature can degrade electrical parameters and potentially damage the equipment. To ensure proper heat dissipation, the installation environment must meet the following requirements:

⚠ Warnings

（1） The equipment must be installed in a well-ventilated environment, with at least 400 mm clearance between the front/rear vents and any obstacles.

（2） Ensure sufficient fresh air intake at the inlet.

（3） If the equipment overheats, check if the vents are unobstructed.

（4） It is recommended to separate the equipment's ventilation system from other ventilation systems in the control room.

The energy storage battery integrated cabinet features front and rear air outlets. The positions of the inlet and outlet are shown in the diagram above.

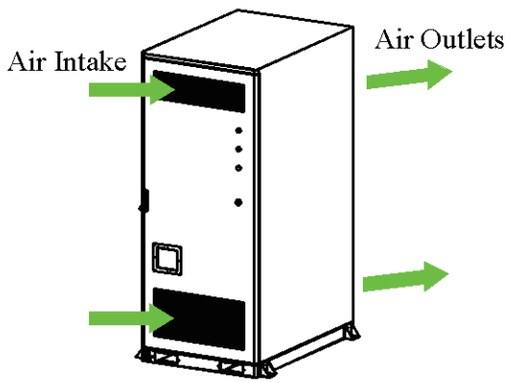

Air Inlet and Outlet Diagram

6.5 Foundation construction requirements

The overall weight of the integrated energy storage system is relatively heavy, and the conditions of the installation site (mainly geological conditions and environmental and climatic conditions, etc.) should be examined in detail before the foundation is constructed.

Only on this basis can the design and construction of the foundation begin.Unreasonable foundation construction plan will bring more difficulties or troubles to the placement, opening and closing of the door and later operation of the integrated energy storage system.

Therefore, the foundation of an integrated energy storage system must be designed and constructed in accordance with certain standards in order to meet the requirements for mechanical support, cable routing, and later maintenance and repair.

At least the following requirements should be met when constructing the foundation:

(1)The bottom of the pit where the foundation is to be constructed must be compacted and filled.

(2)The foundation must be sufficient to provide effective load-bearing support for the integrated energy storage system.

(3)The EIS is elevated to prevent rainwater from eroding the base and interior of the EIS. It is recommended that the foundation be approximately 300 mm above the level of the ground at the installation site.

(4)Drainage measures need to be constructed taking into account the local geological conditions.

(5)Construct a concrete foundation with sufficient cross-sectional area and height. The height of the foundation is to be determined by the builder according to the site geology.

(6)Cable routing should be taken into account when constructing the foundation. Dirt excavated during the construction of the foundation should be cleared immediately to avoid affecting the subsequent lifting of the integrated energy storage system.

(7)The maintenance platform is constructed around the foundation to provide convenience for later maintenance.

(8)Depending on the location and size of the cable entrances and exits of the battery outdoor cabinet, sufficient space should be reserved for the cable ducts on the AC/DC side and pre-embedded in the cable conduits during foundation construction.

(9)Determine the specification and number of shotcrete conduits based on the cable type and number of inlets and outlets.

(10)Both ends of all pre-embedded tubes are temporarily sealed to prevent impurities from entering; otherwise, wiring will be inconvenient at a later stage.

(11)After connecting all cables, cable entrances and exits as well as joints are sealed with fire-resistant mud or other suitable materials to prevent rodents from entering.

(12)Pre-built earthing units according to the relevant standards of the country/region where the project is located.

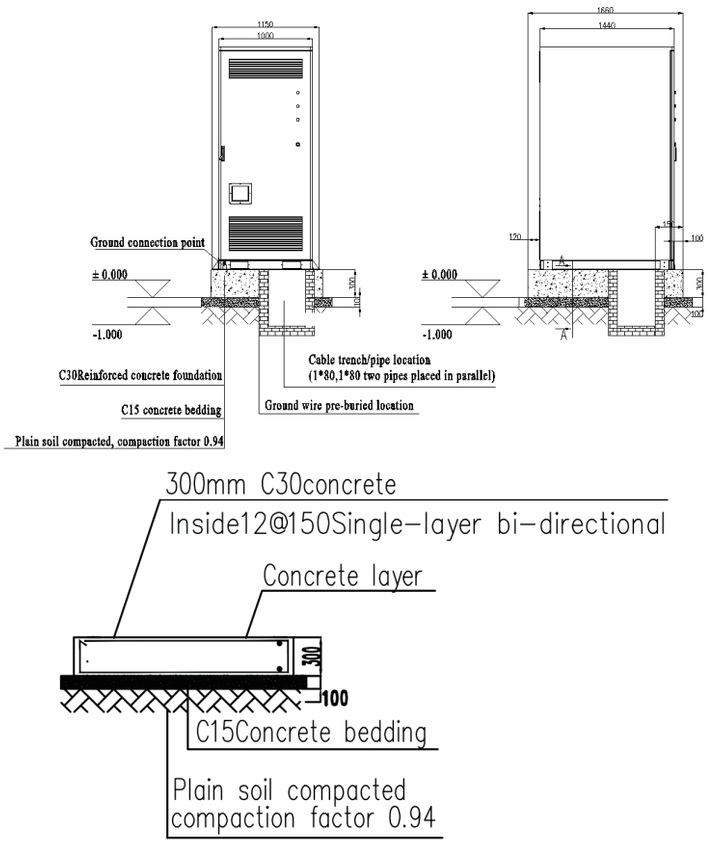

Diagram of foundation construction

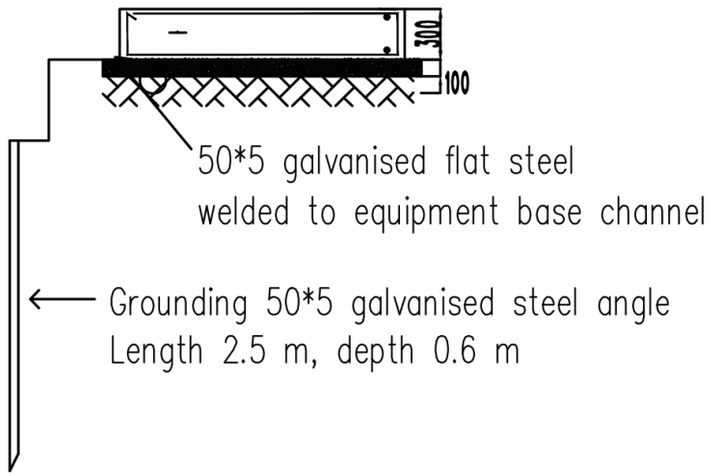

Grounding Diagram

Foundation instruction:

(1)±0.000 Eauivalent to the site design elevation, the foundation height is designed according to the local 50-vear food level.

(2)The dimensions in the drawings are labelled in mm, and the elevation is in m.

(3)Concrete bedding is made of C15 concrete, and the others are made of C30 concrete (to be adjusted according to the soil condition of the project site);Steel components, exposed iron parts are hot-dip galvanized, galvanized surface by electric welding and damage, can be red Dan priming two degrees, silver-grey top coat two degrees.

(4)Connections between cabin and foundation and connections between cable trench and foundation are closed with silicone weathering adhesive.

(5)The top elevation of the pre-buried steel plate should be 5mm higher than the top surface of the foundation, and the combination of the pre-buried parts and the concrete should be left with a deformation joint of 2-4mm wide, the depth of which should be the same as the thickness of the buried parts, and should be closed by the silicone weatherproof adhesive.

(6)The load-bearing capacity of the foundation is about 1.5 t/m2.

6.6 Other protective measures

(1)The installation site shall be constructed with a drainage system to avoid flooding of the bottom of the Energy Storage Integration System or the equipment inside the cabinet during the rainy season or during heavy precipitation.

(2)Do not plant trees within close proximity of the installation site. This is to prevent high winds from knocking down tree branches or scraping off leaves that could block the Energy Storage Integrated System cabinet door or air inlet and outlet vents.

6.7 Prepared tools

Prepared tools


Screwdrivers


Wrench


Wire Stripper


Heat ShrinkTubing


Multimeter


Heat Dryer Gun


Permanent Marker

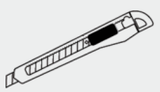
Knife


Drill


Forklifts(>3t)

6.8 Safety Protection Products

Safety Protection Products


Insulated Gloves


Safety Helmets


Protective Glasses


Safety Footwear

6.9 Description of the installation process

The installation process is mainly divided into two stages: Mercury 261CE rack installation and external cables The main content and steps are as follows:

Installation steps	Specific implementation	Remark
Rack installation	Transfer the rack to the designated location by means of forklift transfer or hoisting.	The tool should meet the weight requirements, and the tilt angle should be smaller than 5°.
	Fix the bottom foot of the rack	M12 expansion bolts, required torque is 45~55N.M
	Grounding of the rack	M12 bolt, required torque is 70~100N.M wire size ≥50mm2 (cooper)
Wiring	Connecting external power cables	Recommended use:3*2/0AW-G+1*2AWG cable
	MSD	Should be conducted after the fixation and inspection of racks and harness.

6.9.1 Installation steps

1.Transfer the rack to the designated location by means of forklift transfer or hoisting.

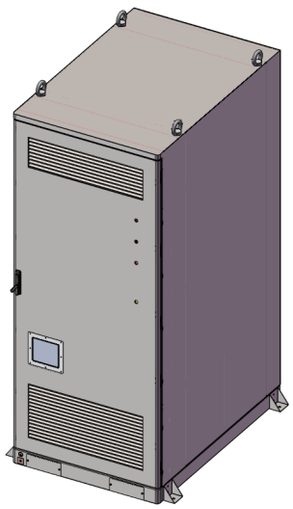

2.Fix the bottom foot of the rack

3.The bottom of each rack is fixed with M12 expansion bolts. The torque of the torque wrenches is set to 45~55N.M.

Different layouts of racks are shown as following figures:

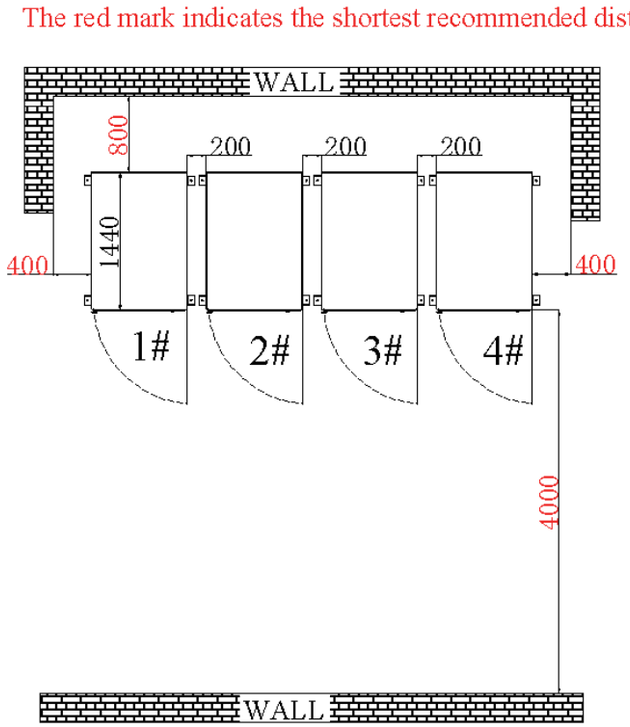

Shoulder-to-shoulder formation

Door-to-door alignment pattern

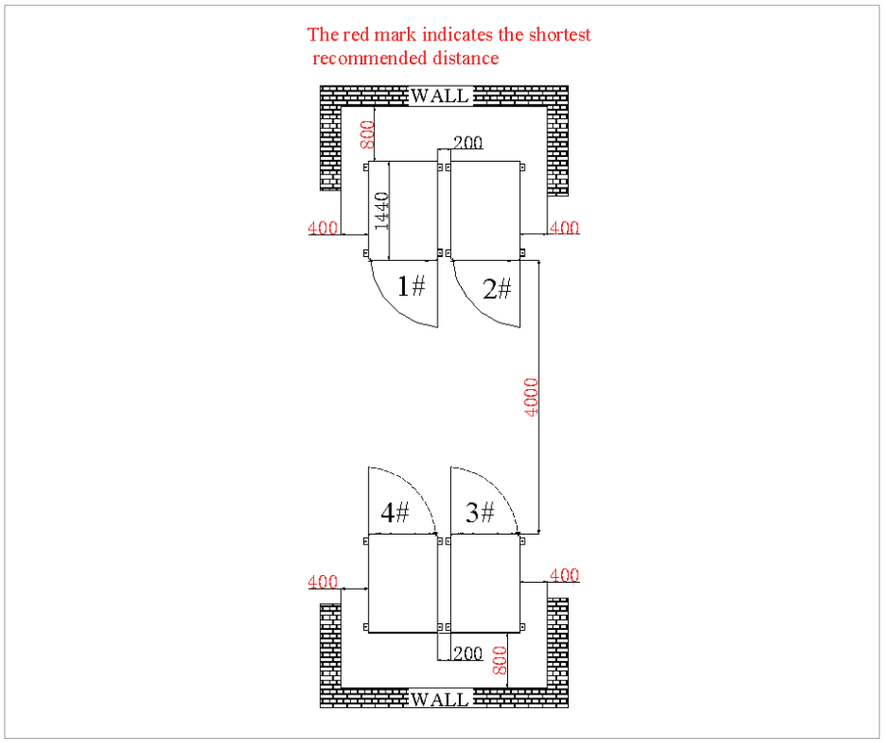

Back-to-back permutations

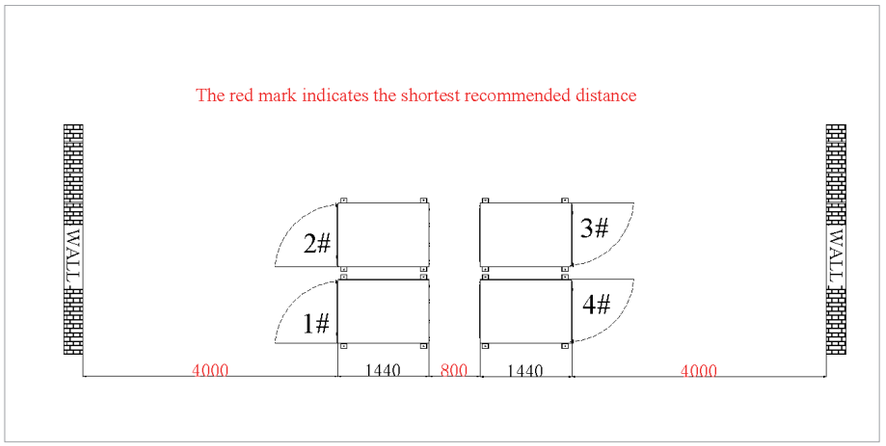

Chemical anchor fixing requirements:

1.Before chemical bar planting, the brush layer of bar planting flour needs to be cleaned out, and then the next step after cleaning

2.The concrete strength grade is C30, and the chemical planting reinforcement needs to do the pull-out test.

3.It is required that the tensile strength of the planted chemical anchor bolt is not less than twice the design value of the bearing capacity.

4.Chemical anchors are recommended to use Hilti HVA chemical anchors. For specific design values, please refer to the table below:

Chemical anchor	Design value of tensile bearing capacity（KN）	Design value of shear capacity（KN）	L1	L2	L3
R-M12	34.7	34.6	125	38	163

- 5.The construction of chemical anchors should comply with JGJ 145-2013《Technical specification for anchorage behind concrete structure》。
- 6.If there is welding, measures should be taken to avoid overheating of the anchoring area and lead to the failure of the rebar glue。

Adhesives for load-bearing structures must be tested for bond shear strength.

During the inspection, the standard value of the bonding strength shall be determined according to the requirements of the confidence level of 0.9 and the guarantee rate of 95%。

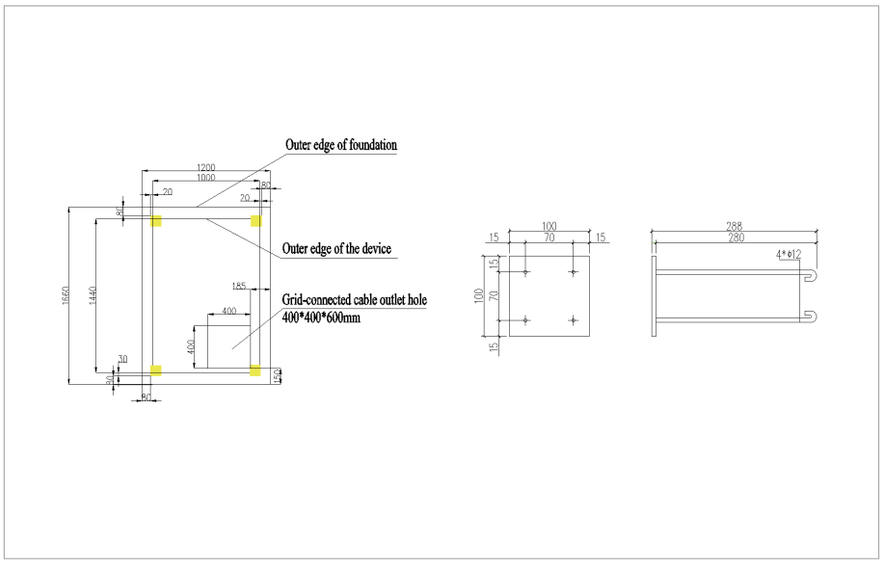

Grounding of the rack:

Fix the grounding wire to the grounding point on the rack with M12 hexagon flange bolts. The torque for M12 fixation: 70-100N.M, and the size of the ground wire ≥1/0AWG (cooper).

6.9.2 Electrical interface

DANGER

Accidental contact with live terminals can result in a fatal electric shock hazard!

- Ensure that the AC and DC switches of the energy storage converter are disconnected and that the terminals are not electrically charged.
- When connecting to the power grid, permission must be obtained from the relevant authorities and all safety directives relating to the power grid must be observed.
- When connecting to the AC grid, disconnect the circuit breaker on the upstream AC side and ensure that the contact terminals are free of voltage.
- Connect to the grid only when approved by the utility grid and following all relevant safety instructions.
- AC outputs must ensure that the equipment is properly grounded internally.
- DC and AC circuits are isolated from the enclosure and require a system connection by the installer if required by the relevant National Electrical Code.

WARNINGS

Disconnect the AC circuit breaker and measure with a multimeter to ensure that there is no voltage at the terminals, and keep it disconnected for 20 minutes before operation.

- 1.Connecting external power cables
  Recommended use:3*2/0AWG+1*2AWG cable.
  Open the equipment cabinet door, feed the cable out through the bottom incoming hole of the cabinet body, and connect it to the terminal of the distribution box. U, V, W, N correspond to A, B, C, N respectively.Terminal bolt M10.

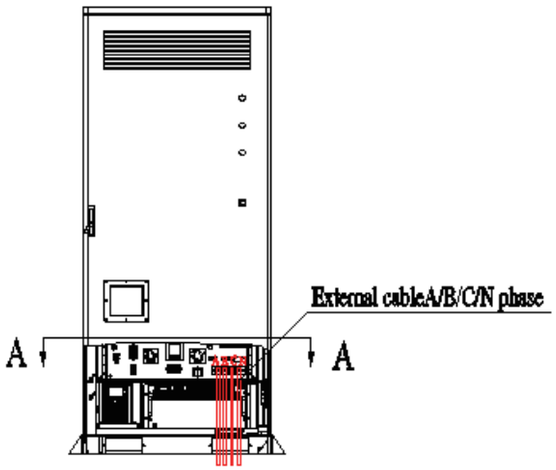

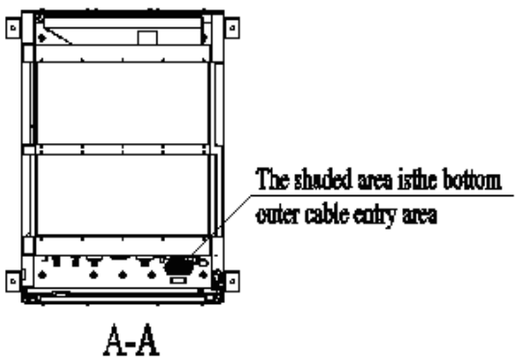

Schematic Diagram of Distribution Box Panel

- 2.Parallel Connection Steps for Multiple AC Power Cables and Grounding Cables

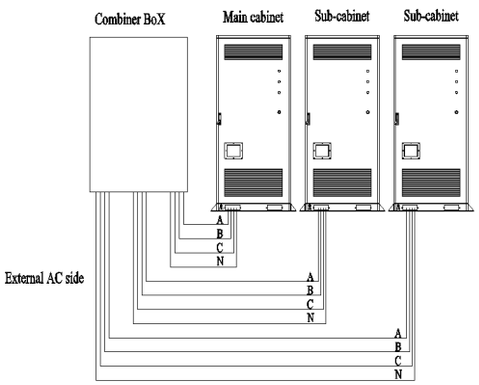

Step 1: Confirm that all output switches of the energy storage battery integrated cabinet and the high-voltage distribution box (front and rear stages) are in the disconnected state;

Step 2: Strip the insulation from the cable end. The stripped length should equal the depth of the copper terminal's crimping hole plus approximately 5 mm ;

Step 3: Select appropriate copper terminals for crimping based on the cable specifications;

(1) Insert the stripped copper wire into the crimping hole of the copper terminal.

(2) Use a terminal crimping machine to secure the copper terminal with at least two crimps.

Step 4: Install heat-shrink tubing;

(1) Select heat-shrink tubing that matches the cable size. The length should extend approximately 2 cm beyond the crimping hole of the copper terminal.

(2) Slide the heat-shrink tubing over the copper terminal, ensuring full coverage of the crimping hole.

(3) Use a heat gun to shrink the tubing tightly.

Step 5: Wiring

Use screws, spring washers, flat washers, and nuts that match the copper terminals to connect and secure the wiring to the busbar of the distribution cabinet/grid-connected cabinet. Tighten to the recommended torque of 40 N·m.

Post-Wiring Inspection

After installation, to avoid equipment damage or property loss, the following items must be rechecked and measured:

(1) Before measurement, disconnect the battery-side and grid-side switches to ensure the DC and AC sides of the energy storage equipment are de-energized.

(2) Verify that the positive and negative connections between the battery and energy storage equipment are correct, the AC phase sequence is correct, and all connections are securely tightened. Measure the resistance between phases—it should be in the megaohm range. If it is in the kiloohm range or lower, inspect the wiring.

(3) Ensure external control cables, grounding wires, and communication cables are securely fastened.

(4) The grounding wire resistance must be less than 0.10 Ω, and the cables should be intact, without damage or cracks.

(5) Clean the installation area to ensure no tools or foreign objects are left behind.

(6) Seal cable gaps with fireproof putty to prevent small animals from entering.

- 3.Install the MSD
  Install five MSD upper cover on the panel of each module box.
  Put the handle in the vertical state and align the cover of the maintenance switch with the receptacle.

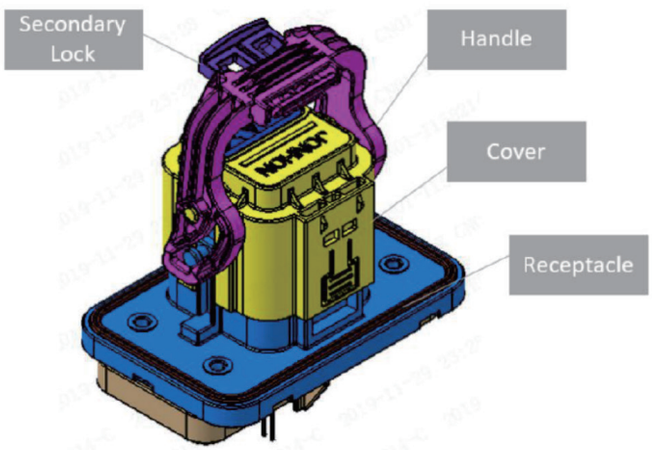

MSD diagram

Push it in and rotate the handle.

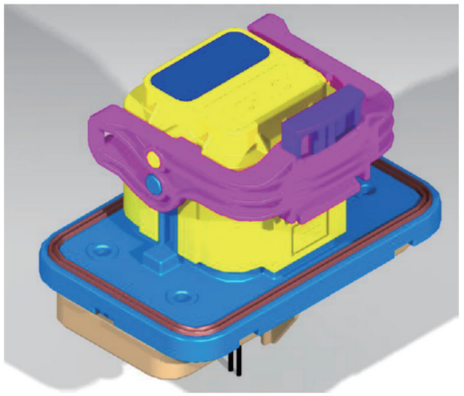

MSD diagram-state 1

When you can hear the “da da” sound, push in the secondary lock(the disassembly method is opposite), and the installation is completed.

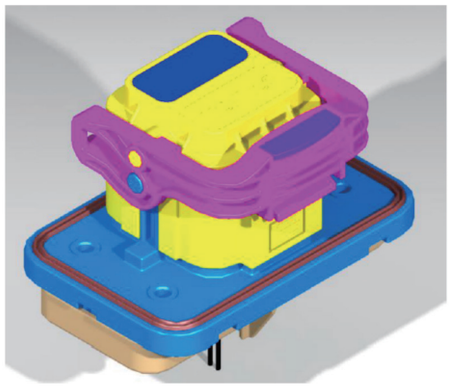

MSD diagram-state 2

- 4.Closing the electrical connection
  After all electrical connections have been made, the wiring should be thoroughly and carefully checked.
  All cable connections need to be checked. Make sure that all connections are correct and tight.
  Effective protection needs to be provided for the inlet and outlet holes of the Energy Storage Integration System, such as between the gaps in the cables, by sealing with fireproof mud.If waterproof terminals are used for sealing, check whether the waterproof terminals are tight. For vacant and unused terminals, they need to be sealed.
  Restore the protective netting all firmly.
  Waterproofing of the foundation at the bottom of the external cabinet of the energy storage integrated system is required.

07 Maintenance Guidelines

7.1 Maintenance Precautions

- 1.In order to carry out system maintenance and repair safely and effectively, the maintenance staff must be qualified by professional training before taking up the job. When the staff performs maintenance and maintenance work, they must observe the relevant safety precautions and use the necessary tools and protective equipment.
- 2.Do not wear metal jewellery such as gold or silver jewellery or watches when operating or maintaining the system.
- 3.Use insulated tools and wear insulated gloves and shoes during maintenance.
- 4.At the end of the maintenance work, please clean up the tools and materials in a timely manner. Do not put metal objects and tool parts inside or on top of the equipment.
- 5.Connecting and dismantling system cables, please make sure all switches are disconnected and pay attention to positive and negative protection.
- 6.System operators and maintenance personnel have any questions about the operation and maintenance of the equipment, please stop the operation and contact the manufacturer for advice, do not operate without authorisation.

It must always be borne in mind that even if the battery cabinet is not in operation, there are still dangerous voltages present inside the cabinet. After disconnecting the air switches from all battery cabinets.
Ensure that the Energy Storage Integrated System is completely isolated from all DC and AC power sources for at least 20 minutes. Check with a voltmeter to ensure that all power sources are disconnected and in a safe condition before performing maintenance work.

7.2 Periodic maintenance

To ensure good operation of the equipment within the integrated energy storage system, it should be maintained on a regular basis.

The maintenance intervals given in this section are reference values. The actual maintenance period should be reasonably determined in accordance with the actual environmental conditions of the project site. If the operating environment of the integrated energy storage system is harsh, such as desert areas, etc., the corresponding maintenance period should be shortened.

The corresponding maintenance cycle should be shortened. In particular, the internal and external cleaning, anti-corrosion and rust prevention work, etc., should be more frequent.

If the system is installed in a desert area, it is recommended that the internal and external parts of the integrated energy storage system should be carefully inspected and thoroughly cleaned after each sandstorm.

It is necessary to periodically check whether the module cooling fan and fan in the energy storage integrated system are operating normally, and also observe whether there is any friction sound in operation, if so, it may be caused by the entry of dust.

If so, it may be due to dust ingress, which needs to be removed after stopping the operation of the integrated energy storage system.

Wait at least 20 minutes for the internal capacitors to finish discharging after the system has been completely de-energised. Before removing the dust, use a multimeter to make sure that the machine is completely free of electricity to avoid electric shocks.

Most of the maintenance work requires the removal of the machine's internal protective cover. After all maintenance work is completed, be sure to restore all removed covers to their original condition.It is recommended to replace all screws with new ones of the same type to ensure that all screws are tightened.

If any non-conformity is found during routine maintenance, inspection, etc. of the internal equipment of the Energy Storage System, correct it immediately. Please correct them immediately. If in doubt, contact us immediately.

7.2.1 Maintenance (every two years)

- 1.System condition and cleaning
  Check whether the internal equipment of the energy storage integrated system is damaged or deformed.
  Check whether the internal equipment has abnormal noise during operation.
  Check whether the temperature inside the integrated energy storage system is too high.
  Check whether the internal humidity and greyness of the integrated energy storage system are within the normal range. If necessary, clean in time.
  Check whether the air inlet and outlet of the Energy Storage Integrated System are blocked.
- 2.Warning signs
  Check whether the warning signs and labels, etc. are clearly visible and not defaced. If necessary, replace them in time.
- 3.Cable shield grounding
  Check whether the cable shield is in good contact with the insulation sleeve; whether the grounding copper row is fixed in place.
- 4.Lightning protection equipment and fuses
  Check whether the lightning protection equipment and fuses are well fastened.
- 5.Corrosion
  Check whether there is oxidation or corrosion inside the integrated energy storage system.

7.2.2 Maintenance work (once a year)

- 1.Cabinet exterior
  Check whether there is any flammable object on the top of the energy storage integrated system.
  Check whether the welding points between the energy storage integrated system and the steel plate of the foundation are firm, and whether they are damaged, painted off or oxidised.
- 2.System condition and cleaning
  Presence of corrosion.
  Check whether the energy storage integrated system is damaged, paint loss, oxidation, etc. Check whether the cabinet door locks, etc. can be flexible.
  Check whether the cabinet door locks, etc. can be opened flexibly.
  Check whether the sealing strip is well fixed.
- 3.Cabinet interior
  Check the inside of the integrated energy storage system for foreign matter, dust, dirt and condensation. Air inlet and outlet Check radiator temperature as well as dust. If necessary, use a vacuum cleaner to clean the heat sink module, etc.
- 4.Wiring and cable layout
  It is necessary to wait until the internal equipment of the energy storage integrated system is completely powered off before starting the inspection work! During the inspection, once non-conformities are found,

please correct them immediately.
Check whether the cable arrangement is standardised and whether there are any short circuits. If there is any abnormality, please correct it immediately.
Check whether all the inlet and outlet holes of the integrated energy storage system are well sealed.
Check whether there is water seepage and humidity inside the integrated energy storage system.
Check whether the power cable connection is loose, and tighten it again according to the torque specified before.
Check the power cables and control cables for damage, especially for cut marks on the skin in contact with metal surfaces.
Check that the insulation wrapping of the power cable terminals is not detached.
Check whether the grounding connection is correct, and the value of grounding resistance shall not be greater than 4Ω.
Check whether the equipotential connection inside the energy storage integrated system is correct.

- 5.Screws
  Check whether the screws inside the energy storage integrated system have fallen off.

7.2.3 Maintenance (every six months to once a year)

- 1.Safety functions
  Check the emergency stop button .
  Simulate a shutdown.
  Check the body warning signs and other equipment markings. If you find them blurred or damaged, replace them promptly.
- 2.Internal Component Inspection
  Check the cleanliness of the circuit board and components.
  Check the radiator temperature as well as dust. If necessary, use a vacuum cleaner to clean the heat sink module and so on.
  If necessary, replace the air filter.
  Caution! The ventilation of the air intake must be checked. Otherwise, if the module cannot be cooled effectively, it will malfunction due to overheating.
- 3.Device Maintenance
  Do a routine inspection of all metal components for corrosion (every six months).
  Annual inspection of contactors (auxiliary switches as well as microswitches) to ensure that they are mechanically functioning well.
  Check operating parameters (especially voltage and insulation).

⚠ CAUTION

The above are only recommended maintenance intervals for the product. The actual maintenance intervals should be determined in accordance with the environment in which the product is installed.

Factors such as the size of the power station, its location, and the site environment will affect the maintenance intervals. If the operating environment is sandy or dusty, it is necessary to shorten the maintenance period and increase the maintenance frequency.

7.2.4 System cleaning

⚠ WARNING

Do not spray or wipe the enclosure / BMS painted surface with alcohol, disinfectant spray, chlorine-based cleaner, organic solvent or corrosive liquid. Repeated wiping may cause fading or peeling of the coating. Only clean with a soft cloth slightly dampened with clean water.

Cleaning around and inside the integrated energy storage system is an important part of maintenance. Due to the temperature, humidity, dust and vibration of the internal equipment in the environment where the integrated energy storage system is located, dust can accumulate inside the system.Dust can accumulate inside the system, blocking air inlets and outlets or entering the internal equipment, leading to potential malfunctions of the internal equipment, shortening the service life of the equipment, or reducing the power generation capacity.During the normal operation of the equipment, regular inspection and cleaning should be carried out to ensure that the internal equipment is in a relatively good operating environment.

- 1.Cleaning cycle
  Energy storage integrated system cleaning cycle should be combined with its operating environment, such as climatic conditions and other reasonable determination, to ensure that the energy storage integrated system external and internal cleanliness.If the operating environment is harsh, such as desert areas, the maintenance cycle should be shortened.
- 2.Internal cleaning
  For the internal dust of the integrated energy storage system, it is not recommended to use a broom to clean directly, otherwise it is easy to cause dust, and it is recommended to use a hoover to adsorb the dust.
- 3.Foundation internal cleaning
  Users should regularly enter the interior of the foundation to check the cleanliness of the foundation. If necessary, please use hoover for cleaning.
- 4.Door lock and hinge inspection
  After cleaning work is completed, the door locks and hinges of the Energy Storage Integrated System should be checked to see if they are operational and in good condition. If necessary, the door locks and hinges should be properly lubricated.
- 5.Seal inspection
  Good condition sealing strip is an important guarantee to prevent water seepage inside the integrated energy storage system, it should be checked carefully and replaced immediately if damaged.

7.3 Battery protection

Under any of the following conditions, the battery will limit current for charging/discharging for protection purposes:

1.Battery SOC is below I-DOD (Depth of Discharge).
2.Battery voltage is below the discharge voltage.
3. Battery overheat protection.
4.Abnormal battery communication of lithium battery.
5.Lithium battery BMS limitation.

When the charging and discharging current limit protection occurs:

1.In grid-connected mode, battery charge/discharge operation may be abnormal.
2.In off-grid mode, the off-grid power supply will turn off.

⚠ ATTENTION

1.In off-grid mode, if the off-grid power supply is switched off due to a low battery, battery SOC, or voltage, all energy generated on the PV side will be used to charge the battery until the battery SOC reaches 40% +(1-DOD)/2, activating the off-grid power supply.
2.In grid-connected mode and off-grid mode, the battery is protected from over-discharge by DOD and discharge voltage.
3.Setting the battery DOD prevents the inverter from releasing battery backup power. Once the DOD setting is reached, the load will be powered only by the PV side or grid support. If there is little or no battery charge for several days in a row, the battery may continue to self-drain energy to maintain communication with the inverter. If the battery SOC reaches a certain level, the inverter will drive the SOC up. This protection mechanism prevents the battery SOC from dropping to 0%.

7.4 Replacing electrical and electronic components

- 1.When replacing electrical and electronic components in the Energy Storage Integrated System, be sure to replace the components with the same model number from the same manufacturer! The model number of the component can be obtained from the Energy Storage Integrated System logo or the logo of the product itself. If this is not possible, please contact us.
- 2.If it is necessary to replace a product of another manufacturer or a different model of the same manufacturer on site, this must be confirmed by our company's analysis in advance. Otherwise, the Company shall not be liable for any injuries or property damage that may be caused as a result.
- 3.Strictly observe the contents described in this section for replacement of electronic components. The Company shall not be liable for any damage caused by failure to comply with this section.
- 4.Only qualified technicians should perform the operations described in this section.

7.5 Fire extinguishing devices

- 1.Please observe the fire codes and regulations of the country/region where the project is located. Regularly inspect and maintain the fire-fighting equipment to ensure that all functional indicators are normal.
- 2.The system adopts a new type of fire extinguishing device, whose tube body is made of special molecular material and contains clean extinguishing agent inside. When the surface of the tube body is heated.
- 3.The tube will rupture and form a natural nozzle to release the extinguishing agent, thus suppressing the fire.
- 4.The surface of the tube body is very sensitive to heat. When heated, the device will react quickly to release the extinguishing agent, thus allowing for timely suppression of the fire.

⚠ WARNING

Asphyxiation hazard! The device generates a large amount of gas when extinguishing the fire automatically. Do not approach the integrated energy storage system during fire extinguishing.

7.6 Incident handling

System in the emergence of anomalies and accidents, should be taken in a timely manner to deal with the correct and effective measures to deal with, to exclude the production of further damage and expand the loss:

- 1.Overheating:
  When the temperature of the battery pack exceeds the upper limit of safe use, the management system will give a warning and ask to stop using immediately.
  And notify the relevant technical personnel to carry out a comprehensive inspection and remove the faults before continuing to use.
- 2.Power leakage:
  In the process of use, if the system is found to have power leakage, the relevant personnel must be
- evacuated immediately, and immediately notify the relevant technical personnel to attend the scene to deal with the situation, and only continue to use the system after troubleshooting.
  It is strictly prohibited to work with the system sick, forced to continue to use.
- 3.Short circuit:
  Various reasons for the system short-circuit situation, must immediately evacuate the relevant personnel, cut off the relevant power supply and electrical equipment (if possible), immediately disconnect the battery from the system, and
  And immediately notify the relevant technical personnel to repair and troubleshooting, was seriously short-circuited equipment and devices, must be fully tested by the manufacturer before deciding whether to continue to use.

- 4.Collision:
  For various reasons, if the equipment is collided, deformed or pierced by foreign objects, the system should be immediately disconnected from the power supply connection line, notify the professional and technical personnel to deal with the situation, such as special circumstances, should be by personnel wearing the necessary protective equipment.
  It should be handled by the personnel wearing necessary protective equipment at the scene before dismantling work.
- 5.Fire
  Step 1: Evacuate the site personnel to a safe area, set aside a safe isolation zone, and call the police according to the situation.

  Step 2: Ensure personal safety under the condition of the following operations:
  If the wiring harness smokes and catches fire, use carbon dioxide or dry powder fire extinguisher to extinguish the fire.
  If the storage battery is on fire, use a high-pressure water gun to extinguish the fire at a distance.
  If smoke is inadvertently inhaled, move and seek medical attention as soon as possible.

  Step 3: Notify the system manufacturer for further treatment advice.

- 6.Flooding
  Step 1: Regardless of whether the system is powered up or not, evacuate the site urgently to a safe area and set aside a safe isolation zone.

  Step 2: Notify the system supplier and have the system serviced after the water has faded.

  Step 3: Prohibit starting the system until the system manufacturer gives the result of the system's safety determination.

- 7.Other accidents:
  When the system needs to be serviced or equipment or devices removed due to other accidents, disconnect the battery lines first to ensure that personnel are not electrocuted. Perform the disassembly while ensuring that no short circuit will occur.
  Ensure that the process will not occur collision, fall, inversion and other situations of secondary damage.

⚠ DANGER

1.If found that may affect the battery or energy storage integrated system, please contact after-sales personnel, prohibit private disassembly.

2.If you find that the internal copper wire of the conductive wire is exposed, it is forbidden to touch it, and the high voltage is dangerous, please contact the after-sales personnel, and it is forbidden to disassemble it privately.

3.If other emergencies occur, please contact after-sales personnel at the first time, operate under the guidance of after-sales personnel, or wait for after-sales personnel to operate on site.

08 Diagnosis of common abnormal problems

When you enable the battery rack, if it cannot work normally, please do not hastily determine that the battery rack is out-of-order, please refer to Table for possible reasons. At the same time, pay attention to check whether it is caused by external environment, such as temperature, noncompliant humidity or load overload. If the maintenance or replacement of spare parts is involved, the after-sales user's manual shall prevail. Meanwhile, the disassembly and installation are not allowed without authorization.

This chapter contains only a few simple failure diagnosis procedures. If the answer to the diagnosis is not very unequivocal, or the information obtained is not sufficient to settle the problem, please contact the local office or distributor of the CESC.

S/N	Failure or alarm phenomena	Label	Troubleshooting scheme
1	Main positive relay cannot be closed	Poor connection of main positive relay wiring harness	Check wiring harness connection
		Main relay failure	Replacement of main negative relay
		BCU failure	Replacement of BCM
2	Main negative relay cannot be closed	Poor connection of main negative relay wiring harness	Check wiring harness connection
		Main negative relay failure	Replacement of main negative relay
		BCU failure	Replacement of BCM
3	Precharged relay cannot be closed	Poor connection of relay wiring harness	Check wiring harness connection
		Relay failure	Replacement of precharged relay
		BCU failure	Replacement of BCU
4	Adhesion of main positive relay	Damage of main positive relay	Replacement of main positive relay
5	Adhesion of main negative relay	Damage of main negative relay	Replacement of main negative relay
6	Abnormal monomer voltage detection	Poor connection of voltage detection wiring harness	Check wiring harness connection
		BMU failure	Replacement of BMU
7	Abnormal monomer temperature detection	Poor connection of temperature detection wiring harness	Check wiring harness connection
		Temperature sensor failure	Replacement of temperature sensor
		BMU failure	Replacement of BMU
8	Abnormal total voltage detection	Poor connection of total voltage detection wiring harness	Check wiring harness connection
		BCU failure	Replacement of BCU
9	Internal communication abnormal	Poor connection of internal CAN wire	Unplug and check CAN cable
10	System parameters are not configured	The battery system parameters are not configured	Configure system parameters

S/N	Failure or alarm phenomena	Label	Troubleshooting scheme
11	Temperature extreme	The battery temperature exceeds the normal working range	Stop charging and discharging
12	Voltage extreme	Single cell voltage exceeds the normal allowable threshold	Stop charging and discharging
13	Smoke sensor is abnormal	Bad sensor wiring	Check the wiring harness connection
		Smoke sensor malfunction	Replace the smoke sensor
14	Temperature sensor abnormal	Bad sensor wiring	Check the wiring harness connection
		Temperature sensor failure	Replace temperature sensor
15	Monomer over-voltage alarm	Poor equalization	Stop charging and standby equalization
		System over-discharge	Stop charging
16	Monomer under-voltage alarm	Poor equalization	Stop discharge and standby equalization
		System over-discharge	Stop discharge
17	Monomer over-temperature alarm	Excessive temperature of individual cores	Check whether the air conditioner is in operation
		Excessive charging-discharge current	Appropriately reduce charging and discharge current
18	Monomer under-temperature alarm	Lower temperature of individual cores	Check whether the heating function is on
		Lower ambient temperature	No charging
19	Charging over-current alarm	Excessive current of system charging	Reduce charging power
20	Discharge over-current alarm	Excessive current of system discharge	Reduce system load

09 Warranty Duty Exemption Scope

CESC does not provide warranty services for the following situations:

(1)Failure to use, maintain, or repair the product in accordance with the provisions of this manual.

(2)The product has exceeded the water soaking, strike or other damage that it can withstand.

(3)The battery system is modified, installed, disassembled and adjusted without the authorization of CESC after-sales service department and service station.

(4)In the event of a battery system failure, those damage caused by customer's unauthorized handling without permission of after-sales department of CESC or service station.

(5)The quality problems caused by the genuine parts provided by our company are not used.

(6)Use of charging equipment that does not meet national standards or damage caused by improper charging operation.

(7)Damage caused by force majeure such as earthquakes, typhoons, floods, chemical pollution, lightning strikes, hail, sediment, flying stones, fires, political disasters, or man-made intentional damage, and secondary compensation based on such damage, both parties are exempt from liability.

CESC has the final right to interpret this specification with the permission of the law and reserves the right to modify this specification without prior notice.

10 After-sales service

Our company provides customers with a full range of technical support and after-sales service.The years of free warranty service refer to the contract.

The following cases are not within the scope of our free warranty service:

（1）Failure to operate in accordance with the instruction manual, resulting in damage to the system or malfunction caused by it.

（2）Failure to follow the relevant electrical safety standards for wiring and power supply, or due to poor site environment, resulting in damage or resulting in failure.

（3）Damage to the system or faults caused by the user's private modification.

（4）Irresistible natural factors such as typhoons, earthquakes, floods, fires, or harsh environments (high temperature, low temperature, high humidity, acid rain, etc.).

system damage or failure caused by such factors.

（5）The user fails to maintain the initial fault state after a fault occurs, and fails to notify the manufacturer in a timely manner and handle the fault on his own, thus making it impossible to make a realistic fault identification of the cause of the fault.

（6）The user fails to maintain the initial fault status and fails to notify the manufacturer in time, resulting in the inability to identify the cause of the fault.