Generation Side Energy Storage Solutions

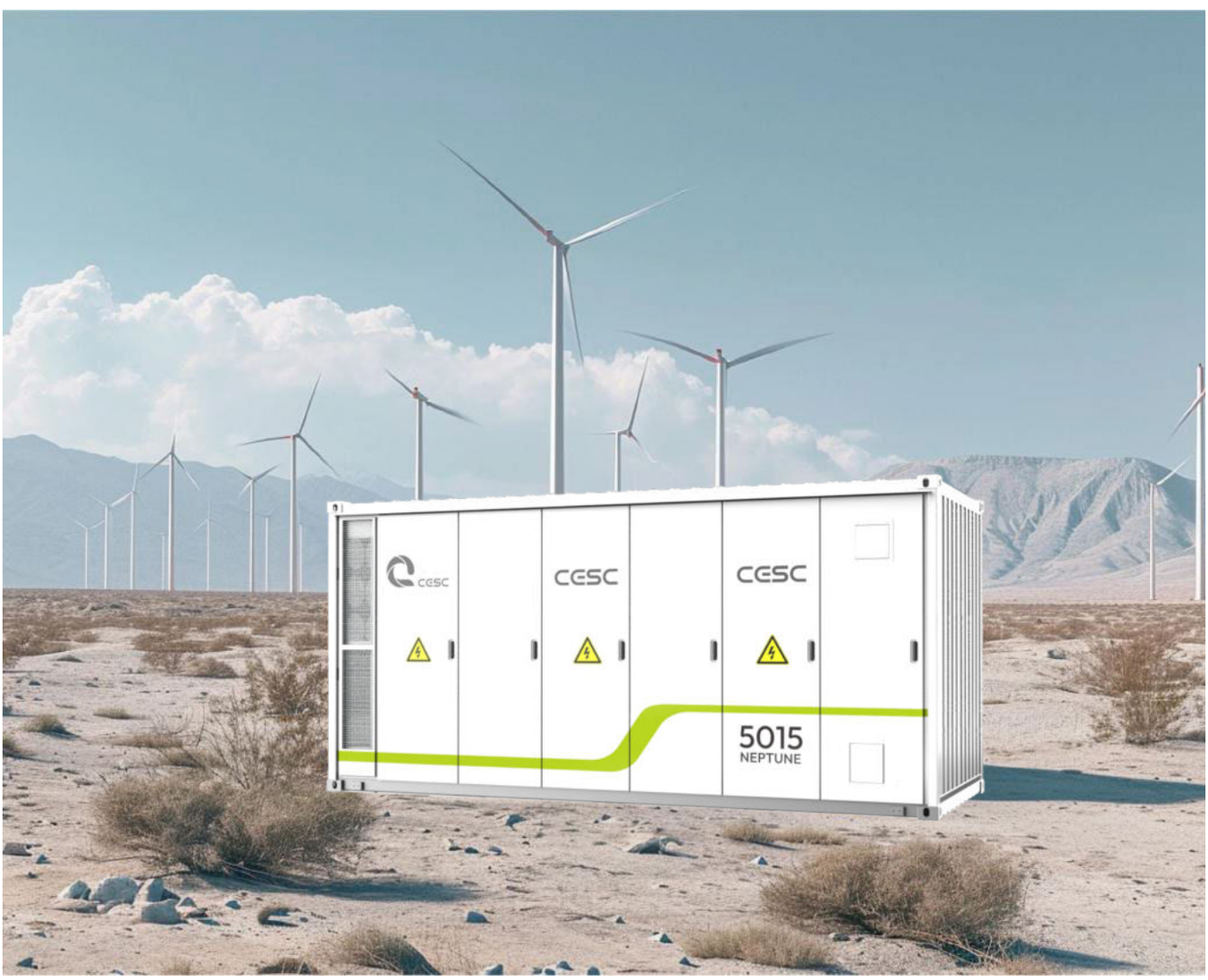

Standardized Design

Prefabricated container-type installation structureFlexible, reliable andscalable

Triple Fire Protection

Layer by layer protection from pack, cluster to entire cabinet.
Intelligent liquid cooling temperature control system

High energy density

High energy density Equipped with Grade A+ cells Superior rate charge and discharge performance Large storagecapacity High conversion efficiency

Smart Management System

Features 1A active equalization.
Adopts battery acquisition IC from Texas Instruments (American brand) for precise cell monitoring.
Both the cloud and the app enable real-time data acquisition and status synchronization, supporting anytime remote monitoringof system performance.

Europe · US

Nominal Energy	5.00MWh
Cooling Method	Liquid Cooling
Cycle Life	≥8000
Level of Protection	IP55
Dimension [w*h*d]	6058 * 2896 * 2438mm
Rated Voltage	1331.2VDC
Total Weight	About 44T
Discharge temperature range	-30°C~60°C
Charge temperature range	0°C~55°C
Operating Humidity	≤95%



Storage of excess renewable energy capacity to balance grid fluctuations,
provide a stable supply of renewable energy,
and respond to peaks in electricity demand and emergencies.

Help the energy transition. Achieve the carbon peaking and carbon neutrality goals.

Product basic parameters		
System parameters	Model Specifications	5MWh
	Cooling method	Liquid cooling
	Number of Cycles	P 8000
	Fire protection measures	PACK grade (aerosol / perfluorophenone) + Cluster grade (aerosol / perfluorophenone + water spray)
	IP level	IP55
	Dimensions (width * depth * height)	6058*2438*2896mm
DC side parameters	Cell specifications	314Ah
	Battery pack configuration	1P104S
	Battery system configuration	12P416S
	Rated voltage	1331.2VDC
	Voltage range	1164.8V ～1497.6V
	Charge and discharge ratio	0.5 P
	Rated current	1884A

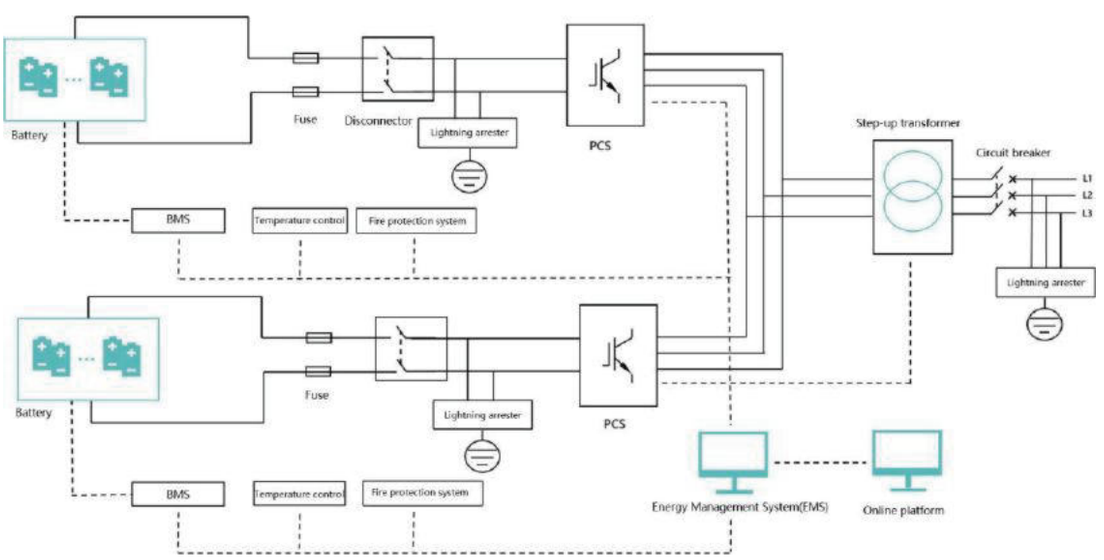

better balances power demand with supply, providing efficient load management and emergency backup power; It is suitable for large-scale industrial and commercial peak cutting and valley filling, as well as large storage frequency and capacity modulation at the source network side, power grid stability and other application scenarios.



Scenario 1

Large industrial and commercial

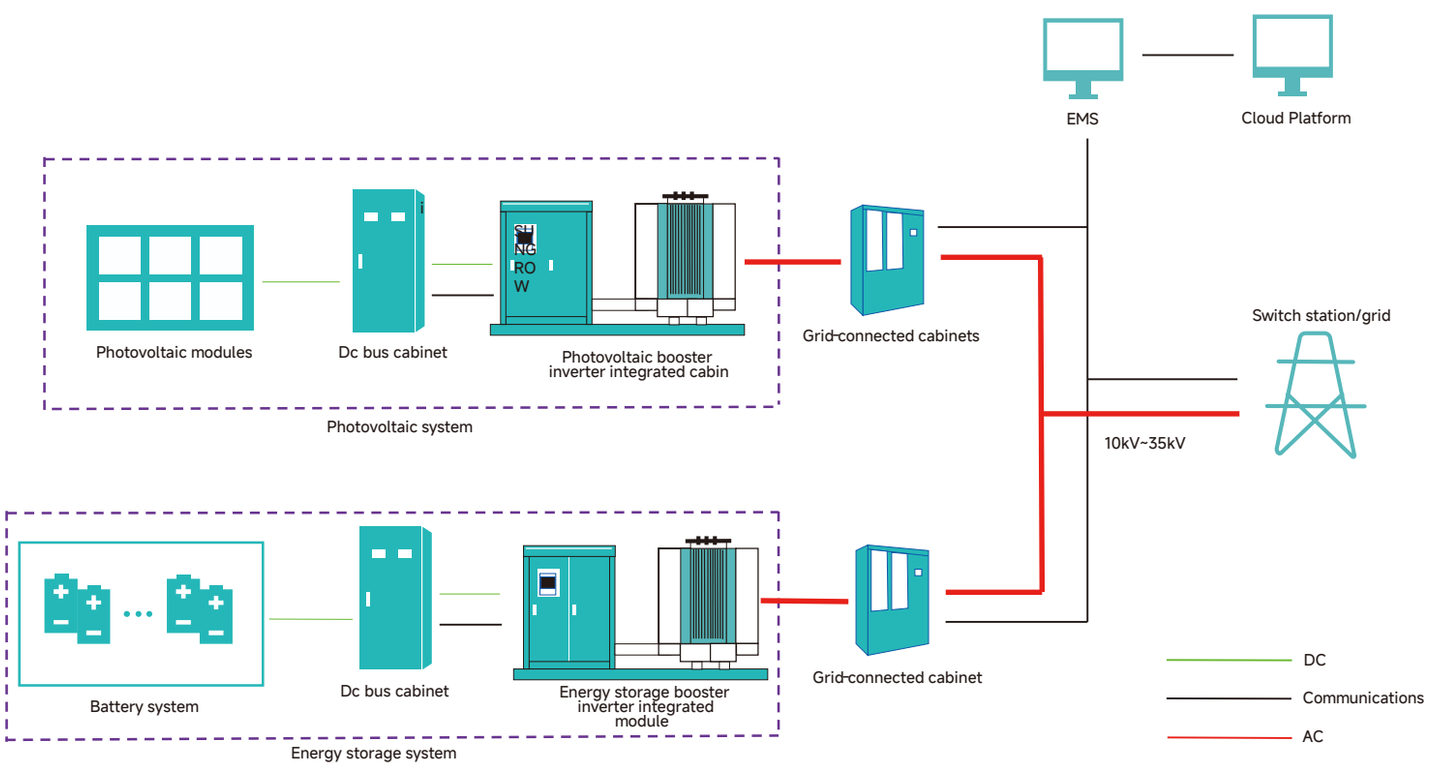

Application Scenarios

- Large energy storage on user side
- Large microgrids
- Shared energy storage

Product Features

- Higher integration, multiple capacity energy storage system optional
- 1500V energy storage system, reduce kWh cost
- Modular high energy density design, flexible configuration
- Prefabricated compartment installation, reduce installation costs and commissioning time



Scenario 2

Source Network Side

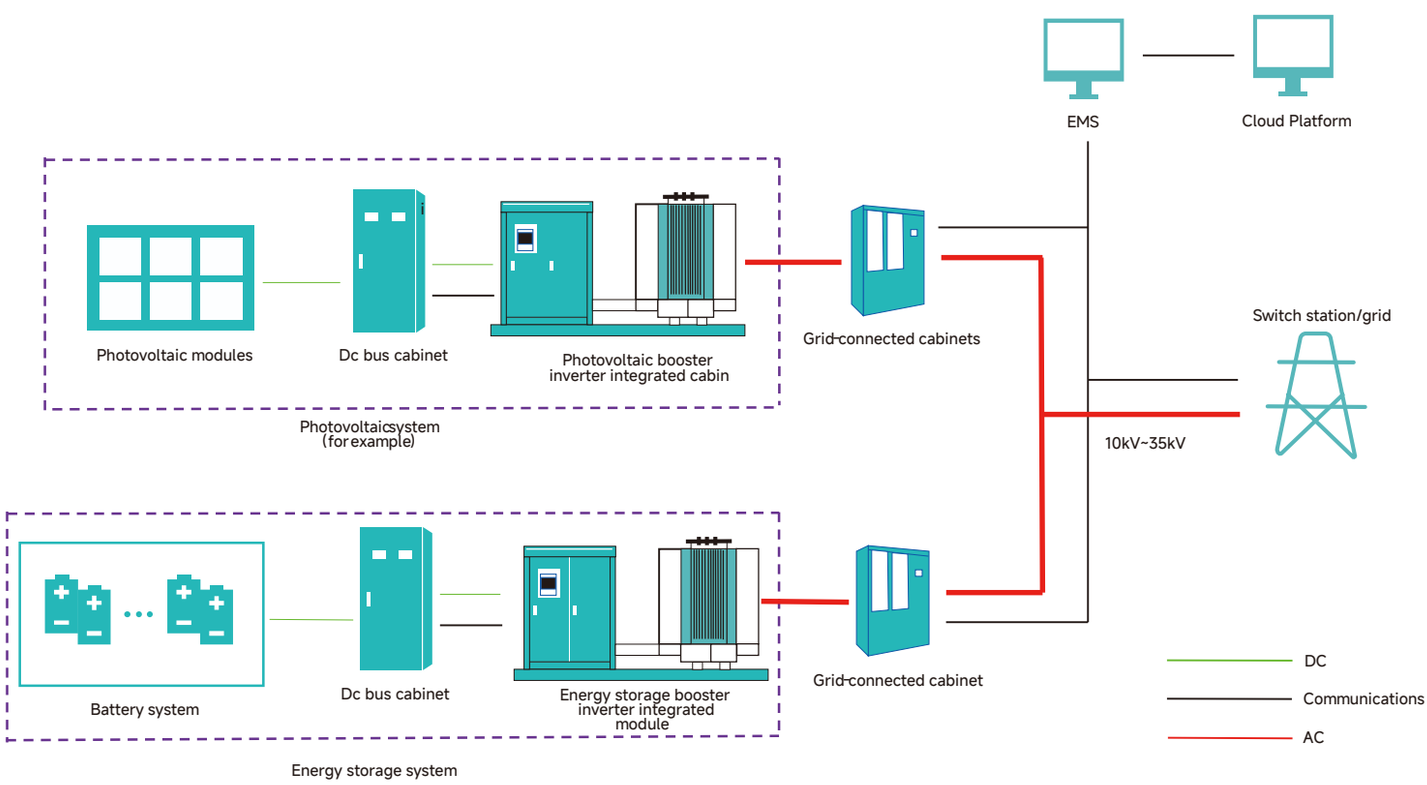

Application Scenarios

- Source side large solar-wind power station storage
- Grid side independent energy storage power station
- Thermal power FM

Product Features

- Higher integration, multiple capacity energy storage system optional
- 1500V energy storage system, reduce Wh cost
- Modular high energy density design, flexible configuration
- Prefabricated compartment installation, reduce installation costs and commissioning time