Container user manual

5MWh-20ft liquid cooling container

12P416S LFP314Ah



Consistent energy storage concept

	container user manual	Ver.	1.0
		Page.	2
		effective date	Sept.10th.2024

content

1.General 6
1.1 the purpose 6
1.2 symbols interpretation 6
2.standard for safety 6
2.1 General Safety 6
2.2 Personal Safety 7
2.3 Electrical Safety 9
2.4 Mechanical Safety 12
2.5 Installation and Wiring 14
2.6 Operation and Maintenance 16
3. Product Description 19
3.1 Model Description 19
3.2 Label Description 20
3.3 Function and Features 21
3.4 Appearance 22
3.5 Components 25
3.5.1 technical parameters 26
3.5.2 switch gear 28
3.5.3 Integrated Control Panel 31
3.5.4 Monitoring System 34
3.5.5 BMS 36
3.5.6 Environmental Control System 42
3.5.7 Fire Suppression System 47
3.6 Battery ESS Working Principle 56
3.6.1 Main Circuit Diagram 56
3.6.2 Working Modes 57
3.7 Typical Application Scenario 59
4. Transportation Requirement 60

Consistent energy storage concept

	container user manual	Ver.	1.0
		Page.	3
		effective date	Sept.10th.2024

5. Storage Requirement 63
5.1 ESS (Excluding Battery Packs) Storage 63
5.2 Battery Pack Storage and Single Battery Pack Charge 63
6. Installation 67
6.1 Site Requirements 67
6.1.1 Site Selection 67
6.2 Unpacking and Acceptance 73
6.3 Installation Preparations 74
6.3.1 Preparing Tools 74
6.3.2 Personal Protective Equipment (PPE) 77
6.4 Installing the ESS 77
6.4.1 Installation Environment Check 78
6.4.2 Determining the installation Position of the ESS 78
6.4.3 Foundation Requirements 78
6.4.4 Hoisting the ESS 79
6.4.5 Clearance Requirement 82
6.4.6 Forklift Requirement 83
6.5 Connecting a Ground Cable for the ESS 83
6.5.1 Bottom Fixation for the ESS 83
6.5.2 Grounding the ESS 85
6.6 Installing Components 86
6.6.1 Installation of rain cover for the liquid cooling unit 86
6.6.2 Installation of the Rain Eaves for the Battery Container 86
7. Battery Connection 88
7.1 Precautions 88
7.2 Connecting the Cable 90
7.2.1 Tools Preparation 90
7.2.2 Connection Steps 90
8. Electrical Cable Connection 95

Consistent energy storage concept

	container user manual	Ver.	1.0
		Page.	4
		effective date	Sept.10th.2024

8.1 ESS Container Electrical Wiring Overview 95
8.2 Preparation Before Electrical Cable Connection 96
8.2.1 Installation Tools Preparation 96
8.2.2 Open the Container door and panel door 96
8.2.3 Preparing the Electrical Cables 98
8.3 DC Cable Wiring 98
8.3.1 DC cable wiring steps 99
8.4 External power supply and communication interface 100
8.5 Operation after Electrical Cable Connection 102
9. Power-on and Power-off Operation 104
9.1 Power-on 104
9.1.1 Power-on Check 104
9.1.2 Power-on Steps 104
9.2 Power-off 109
9.2.1 Planned Power-off 109
9.3 Unplanned Power-off (Outage) 114
10. Fire Extinguishing System 115
10.1 Description of the System 115
10.2 Control Logic 115
10.3 Exhaust System 116
10.4 Aerosol Fire Extinguishing System 117
10.5 Water-based Fire Suppression System 118
11.maintenance guidance 119
11.1 Before Maintenance 119
11.2 Cabin maintenance 119
11.2.1 Repair Measures for damaged appearance 120
11.2.2 Checking Door locks and Hinges 122
11.2.3 Checking Seals 122
11.2.4 Warning Identifier 122

Consistent energy storage concept

	container user manual	Ver.	1.0
		Page.	5
		effective date	Sept.10th.2024

11.3 Liquid Cooling System Maintenance 122
11.3.1 Maintenance of liquid cooling units 122
11.3.2 Replacing the Coolant 123
11.4 Air Conditioner Maintenance 126
11.5UPS Maintenance 127
11.6 maintenance of fire fighting equipment 128
11.6.1 Automatic fire alarm system 128
11.6.2 Aerosol fire extinguishing system 131
12. Routine Maintenance 132
12.1 Preparation Before Maintenance 132
12.2 Routine Maintenance 133
12.2.1 133
12.2.2 Quarterly Maintenance 134
12.2.3 Semi-annual Maintenance 136
12.2.4 Annual Maintenance 139
13. Troubleshooting 142
Appendix I - Emergency Handling 143
Appendix II - Crimping an OT or DT Terminal 145
Appendix III – Acronyms and Abbreviations 147
Appendix IV - References 148
Disclaimer 149

Consistent energy storage concept

	container user manual	Ver.	1.0
		Page.	6
		effective date	Sept.10th.2024

1.General

1.1 the purpose

this document comprehensively specifies the transportation, storage, installation, operation instruction, maintenance guidance and corresponding safety standard for container2508KW/5015kWh which intends to be used in utility scale energy storage & industrial side from CESC New Energy Technology Co., Ltd.

1.2 symbols interpretation

symbols	interpretation
DANGER	Indicates a hazard with a high level of risk which, if not avoided, will result in death or serious injury.
WARNING	Indicates a hazard with a medium level of risk which, if not avoided, could result in death or serious injury.
CAUTION	Indicates a hazard with a low level of risk which, if not avoided, could result in minor or moderate injury.
NOTICE	Indicates a potentially hazardous situation which, if not avoided, could result in equipment damage, data loss, performance deterioration, or unanticipated results. NOTICE is used to address practices not related to personal injury.
NOTE	Supplements the important information in the main text. NOTE is used to address information not related to personal injury, equipment damage, and environment deterioration.

2.standard for safety

2.1 General Safety

Before transporting, storing, installing, operating, using, and/or maintaining the equipment, read this document, strictly follow the instructions provided herein, and follow all the safety instructions on the equipment and in this document.

In this document, "equipment" refers to the products, software, components, spare parts, and/or services related to this document; "the Company" refers to the manufacturer (producer), seller, and/or service provider of the equipment; "you" refers to the entity that transports, stores, installs, operates, uses, and/or maintains the equipment.

The **Danger**, **Warning**, **Caution**, and **Notice** statements described in this document do not cover all the safety precautions.

You also need to comply with relevant international, national, or regional standards and industry practices.
The Company shall not be liable for any consequences that may arise due to violations of safety requirements or safety standards concerning the design, production, and usage of the equipment.
The equipment shall be used in an environment that meets the design specifications. Otherwise, the equipment may be faulty, malfunctioning, or damaged, which is not covered under the warranty.
The Company shall not be liable for any property loss, personal injury, or even death caused thereby.
Comply with applicable laws, regulations, standards, and specifications during transportation, storage, installation, operation, use, and maintenance.
Do not perform reverse engineering, decompilation, disassembly, adaptation, implantation, or other derivative operations on the equipment software. Do not study the internal implementation logic of the equipment, obtain the source code of the equipment software, violate intellectual property rights, or disclose any of the performance test results of the equipment software. the Company shall not be liable for any of the following circumstances or their consequences:
● The equipment is damaged due to force majeure such as earthquakes, floods, volcanic eruptions, debris flows, lightning strikes, fires, wars, armed conflicts, typhoons, hurricanes, tornadoes, and other extreme weather conditions.
● The equipment is operated beyond the conditions specified in this document.
● The equipment is installed or used in environments that do not comply with international, national, or regional standards.
● The equipment is damaged due to storage conditions that do not meet the requirements specified in the product document.
● The equipment is installed or used by unqualified personnel.
● The equipment is damaged due to the receiving party or a third party's negligence, intentional breach, gross negligence, or improper operations, or other reasons not related to the Company.
● Fail to follow the operation instructions and safety precautions on the product and in the document.
● Remove or modify the product or modify the software code without authorization.
● The receiving party or a third party authorized by you cause the equipment damage during transportation.
● Fail to prepare materials and tools that comply with local laws, regulations, and related standards.

2.2 Personal Safety

⚠ DANGER

Ensure that power is off during installation. Do not install or remove a cable with power on. Instantaneous contact between the core of the cable and the conductor will cause electric arcs, sparks, fire, or explosion, which may result in personal injury.

	container user manual	Ver.	1.0
		Page.	8
		effective date	Sept.10th.2024

DANGER

Non-standard and improper operations on the energized equipment may cause fire, electric shocks, or explosion, resulting in property damage, personal injury, or even death.

DANGER

Before operations, remove conductive objects such as watches, bracelets, bangles, rings, and necklaces to prevent electric shocks.

DANGER

During operations, use dedicated insulated tools to prevent electric shocks or short circuits. the dielectric withstanding voltage level must comply with local laws, regulations, standards, and specifications.

WARNING

During operations, wear personal protective equipment such as protective clothing, insulated shoes, goggles, safety helmets, and insulated gloves.

General Requirements

● Do not stop protective devices. Pay attention to the warnings, cautions, and related precautionary measures in this document and on the equipment.
● If there is a likelihood of personal injury or equipment damage during operations, immediately stop, report the case to the supervisor, and take feasible protective measures.
● Do not power on the equipment before it is installed or confirmed by professionals.
● Do not touch the power supply equipment directly or with conductors such as damp objects. before touching any conductor surface or terminal, measure the voltage at the contact point to ensure that there is no risk of electric shock.
● Do not touch operating equipment because the enclosure is hot.
● Do not touch a running fan with one's hands, components, screws, tools, or boards. Otherwise, personal injury or equipment damage may occur.
● In the case of a fire, immediately leave the building or the equipment area and activate the fire alarm or call emergency services. Do not enter the affected building or equipment area under any circumstances.

Personnel Requirements

● Only professionals and trained personnel are allowed to operate the equipment.
– Professionals: personnel who are familiar with the working principles and structure of the equipment, trained or experienced in equipment operations and are clear of the sources and degree of various potential hazards in equipment installation, operation, maintenance.

– Trained personnel: personnel who are trained in technology and safety, have required experience, are aware of possible hazards on themselves in certain operations, and are able to take protective measures to minimize the hazards on themselves and other people

● Personnel who plan to install or maintain the equipment must receive adequate training, be able to correctly perform all operations, and understand all necessary safety precautions and local relevant standards.

● Only qualified professionals or trained personnel are allowed to install, operate, and maintain the equipment.

● Only qualified professionals are allowed to remove safety facilities and inspect the equipment.

● Personnel who will perform special tasks such as electrical operations, working at heights, and operations of special equipment must possess the required local qualifications.

● Only certified high-voltage electricians are allowed to operate medium- voltage equipment.

● Only authorized professionals are allowed to replace the equipment or components (including software).

● Only personnel who need to work on the equipment are allowed to access the equipment.

2.3 Electrical Safety

DANGER

Before connecting cables, ensure that the equipment is intact. Otherwise, electric shocks or fire may occur

DANGER

Non-standard and improper operations may result in fire or electric shocks

DANGER

Prevent foreign matter from entering the equipment during operations. Otherwise, equipment damage, load power derating, power failure, or personal injury may occur.

WARNING

For the equipment that needs to be grounded, install the ground cable first when installing the equipment and remove the ground cable last when removing the equipment.

CAUTION

Do not route cables near the air intake or exhaust vents of the equipment.

General Requirements

	container user manual	Ver.	1.0
		Page.	10
		effective date	Sept.10th.2024

● Follow the procedures described in the document for installation, operation, and maintenance. do not reconstruct or alter the equipment, add components, or change the installation sequence without permission.
● Obtain approval from the national or local electric utility company before connecting the equipment to the grid.
● Observe the power plant safety regulations, such as the operation and work ticket mechanisms.
● Install temporary fences or warning ropes and hang "No Entry" signs around the operation area to keep unauthorized personnel away from the area
● Before installing or removing power cables, turn off the switches of the equipment and its upstream and downstream switches.
● If any liquid is detected inside the equipment, disconnect the power supply immediately and do not use the equipment.
● Before performing operations on the equipment, check that all tools meet the requirements and record the tools. After the operations are complete, collect all of the tools to prevent them from being left inside the equipment.
● Before installing power cables, check that cable labels are correct and cable terminals are insulated.
● When installing the equipment, use a torque tool of a proper measurement range to tighten the screws. When using a wrench to tighten the screws, ensure that the wrench does not tilt and the torque error does not exceed 10% of the specified value.
● Ensure that bolts are tightened with a torque tool and marked in red and blue after double-check. Installation personnel mark tightened bolts in blue. Quality inspection personnel confirm that the bolts are tightened and then mark them in red. (The marks must cross the edges of the bolts.)



● After the installation is complete, ensure that protective cases, insulation tubes, and other necessary items for all electrical components are in position to avoid electric shocks.
● If the equipment has multiple inputs, disconnect all the inputs before operating the equipment.
● Before maintaining a downstream electrical or power distribution device, turn off the output switch on the power supply equipment.
● During equipment maintenance, attach "Do not switch on" labels near the upstream and downstream switches or circuit breakers as well as warning signs to prevent accidental connection. The equipment can be powered on only after troubleshooting is complete.
●If fault diagnosis and troubleshooting need to be performed after power-off, take the following safety measures: Disconnect the power supply. Check whether the equipment is live. Install a ground cable. Hang warning signs and set up fences.
● Check equipment connections periodically, ensuring that all screws are securely tightened.
● Only qualified professionals can replace a damaged cable.
● Do not scrawl, damage, or block any labels or nameplates on the equipment. Promptly replace labels that have worn out.

Consistent energy storage concept

● Do not use solvents such as water, alcohol, or oil to clean electrical components inside or outside of the equipment.

Grounding

● Ensure that the grounding impedance of the equipment complies with local electrical standards.
● Ensure that the equipment is connected permanently to the protective ground. before operating the equipment, check its electrical connection to ensure that it is reliably grounded.
● Do not work on the equipment in the absence of a properly installed ground conductor.
● Do not damage the ground conductor.
● For the equipment that uses a three-pin socket, ensure that the ground terminal in the socket is connected to the protective ground point.
● If high touch current may occur on the equipment, ground the protective ground terminal on the equipment enclosure before connecting the power supply; otherwise, electric shock as a result of touch current may occur.

Cabling Requirements

● When selecting, installing, and routing cables, follow local safety regulations and rules.
● When routing power cables, ensure that there is no coiling or twisting. do not join or weld power cables. If necessary, use a longer cable.
● Ensure that all cables are properly connected and insulated, and meet specifications.
● Ensure that the slots and holes for routing cables are free from sharp edges,and that the positions where cables are routed through pipes or cable holes are equipped with cushion materials to prevent the cables from being damaged by sharp edges or burrs.
● If a cable is routed into the Container from the top, bend the cable in a U shape outside the Container and then route it into the Container.
● Ensure that cables of the same type are bound together neatly and straight and that the cable sheathing intact. When routing cables of different types, ensure that they are at least 30 mm away from each other.
● When cable connection is completed or paused for a short period of time, seal the cable holes with sealing putty immediately to prevent small animals or moisture from entering.
● Secure buried cables using cable supports and cable clips. Ensure that the cables in the backfill area are in close contact with the ground to prevent cable deformation or damage during backfilling.
● If the external conditions (such as the cable layout or ambient temperature) change, verify the cable usage in accordance with the IEC-60364-5-52 or local laws and regulations. For example, check that the current-carrying capacity meets requirements.
● When routing cables, reserve at least 30 mm clearance between the cables and heat-generating components or areas. This prevents deterioration or damage to the cable insulation layer.
● When the temperature is low, violent impact or vibration may damage the plastic cable sheathing. To ensure safety, comply with the following requirements:

– Cables can be laid or installed only when the temperature is higher than 0°C. handle cables with caution, especially at a low temperature.
– Cables stored at subzero temperatures must be stored at room temperature for at least 24 hours before they are laid out.
● Do not perform any improper operations, for example, dropping cables directly from a vehicle. Otherwise, the cable performance may deteriorate due to cable damage, which affects the current-carrying capacity and temperature rise.

ESD

NOTICE

The static electricity generated by human bodies may damage the electrostatic- sensitive components on boards, for example, the large-scale integrated (LSI) circuits.

● When touching the equipment and handling boards, modules with exposed circuit boards, or application-specific integrated circuits (ASICs), observe ESD protection regulations and wear ESD clothing and ESD gloves or a well-grounded ESD wrist strap.



● When holding a board or a module with exposed circuit boards, hold its edge without touching any components. Do not touch the components with bare hands.
● Package boards or modules with ESD packaging materials before storing or transporting them.

2.4 Mechanical Safety

Hoisting

● Only trained and qualified personnel are allowed to perform hoisting operations.
● Install temporary warning signs or fences to isolate the hoisting area.
● Ensure that the foundation where hoisting is performed on meets the load- bearing requirements.
● Before hoisting objects, ensure that hoisting tools are firmly secured onto a fixed object or wall that meets the load-bearing requirements.
● During hoisting, do not stand or walk under the crane or the hoisted objects.
● Do not drag steel ropes and hoisting tools or bump the hoisted objects against hard objects during hoisting.

	container user manual	Ver.	1.0
		Page.	13
		effective date	Sept.10th.2024

● Ensure that the angle between two hoisting ropes is no more than 90 degrees, as shown in the following figure

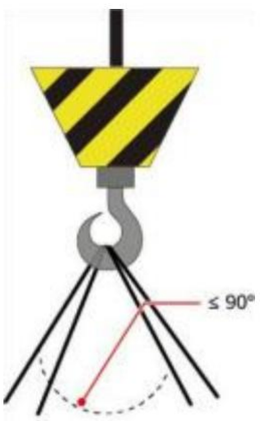

Drilling Holes

● Obtain consent from the customer and contractor before drilling holes.
● Wear protective equipment such as safety goggles and protective gloves when drilling holes.
● To avoid short circuits or other risks, do not drill holes into buried pipes or cables.
● When drilling holes, protect the equipment from shavings. After drilling, clean up any shavings.

Working at Heights

● Any operations performed 2 m or higher above the ground shall be supervised properly.
● Only trained and qualified personnel are allowed to work at heights.
● Do not work at heights when steel pipes are wet or other risky situations exist. After the preceding conditions no longer exist, the safety owner and relevant technical personnel need to check the involved equipment. Operators can begin working only after safety is confirmed.
● Set a restricted area and prominent signs for working at heights to warn away irrelevant personnel.
● Set guard rails and warning signs at the edges and openings of the area involving working at heights to prevent falls.
● Do not pile up scaffolding, springboards, or other objects on the ground under the area involving working at heights. Do not allow people to stay or pass under the area involving working at heights.
● Carry operation machines and tools properly to prevent equipment damage or personal injury caused by falling objects.
● Personnel involving working at heights are not allowed to throw objects from the height to the ground, or vice versa. Objects shall be transported by slings, hanging baskets, highline trolleys, or cranes.
● Do not perform operations on the upper and lower layers at the same time. If unavoidable, install a dedicated protective shelter between the upper and lower layers or take other protective measures. Do not pile up tools or materials on the upper layer.

	container user manual	Ver.	1.0
		Page.	14
		effective date	Sept.10th.2024

● Dismantle the scaffolding from top down after finishing the job. Do not dismantle the upper and lower layers at the same time. When removing a part, ensure that other parts will not collapse.
● Ensure that personnel working at heights strictly comply with the safety regulations. The Company is not responsible for any accident caused by violation of the safety regulations on working at heights.
● Behave cautiously when working at heights. Do not rest at heights.

Using Ladders

● Use wooden or insulated ladders when you need to perform live-line working at heights.
● Platform ladders with protective rails are preferred. Do not use single ladders.
● Before using a ladder, check that it is intact and confirm its load bearing capacity. Do not overload it.
● Ensure that the ladder is securely positioned and held firm.



● When climbing up the ladder, keep your body stable and your center of gravity between the side rails, and do not overreach to the sides.
● When a step ladder is used, ensure that the pull ropes are secured.

2.5 Installation and Wiring

ESS Safety

DANGER

Do not open Container doors when the system is running.

If the ESS is faulty, do not stand within the opening range of the Container doors.

Evacuate from the site immediately once the fire alarm horn/strobe is triggered.

Take protection and isolation measures for the ESS, such as installing fences, walls, and safety warning signs to prevent personal injury or property damage caused by unauthorized access during operations.

	container user manual	Ver.	1.0
		Page.	15
		effective date	Sept.10th.2024

● When installing the ESS, comply with the fire separation distance or fire wall requirements specified in local standards, including but not limited to GB 51048-2014 Design Code for Electrochemical Energy Storage Station and NFPA 855 Standard for the Installation of Stationary Energy Storage Systems.
● Check the fire safety of the ESS regularly, at least once a month.
● When inspecting the system with power on, pay attention to the hazard warning signs on the equipment. Do not stand at the battery container doors.
● After power components of the ESS are replaced or cable connections are changed, you need to manually start cable connection detection and topology identification to prevent system malfunction.
● It is recommended that you prepare a camera to record the detailed processes of equipment installation, operation, and maintenance.

Battery Safety

DANGER

Do not connect the positive and negative poles of a battery without any load. Otherwise, the battery may be short-circuited. Battery short circuits can generate high instantaneous current and releases a large amount of energy, which may cause battery leakage, smoke, flammable gas release, thermal runaway, fire, or explosion. To avoid battery short circuits, do not maintain batteries with power on.

Do not expose batteries at high temperatures or around heat sources, such as scorching sunlight, fire sources, transformers, and heaters. Battery overheating may cause leakage, smoke, flammable gas release, thermal runaway, fire, or explosion.

Protect batteries from mechanical vibration, falling, collision, punctures, and strong impact. Otherwise, the batteries may be damaged or catch fire.

To avoid leakage, smoke, flammable gas release, thermal runaway, fire, or explosion, do not disassemble, alter, or damage batteries, for example, insert foreign objects into batteries, squeeze batteries, or immerse batteries in water or other liquids.

Do not touch battery terminals with other metal objects, which may cause heat or electrolyte leakage.

There is a risk of fire or explosion if the model of the battery in use or used for replacement is incorrect. Use a battery of the model recommended by the manufacturer.

Battery electrolyte is toxic and volatile. Do not get contact with leaked liquids or inhale gases in the case of battery leakage or odor. In such cases, stay away from the battery and contact professionals immediately. Professionals must wear safety goggles, rubber gloves, gas masks, and protective clothing, power off the equipment, remove the battery, and contact technical engineers.

	container user manual	Ver.	1.0
		Page.	16
		effective date	Sept.10th.2024

A battery is an enclosed system and will not release any gases under normal operations. If a battery is improperly treated, for example, burnt, needle-pricked, squeezed, struck by lightning, overcharged, or subject to other adverse conditions that may cause battery thermal runaway, the battery may be damaged or an abnormal chemical reaction may occur inside the battery, resulting in electrolyte leakage or production of gases such as CO and H2. To prevent fire or device corrosion, ensure that flammable gas is properly exhausted.

The gas generated by a burning battery may irritate your eyes, skin, and throat. Take protective measures promptly.

Install batteries in a dry area. Do not install them under areas prone to water leakage, such as air conditioner vents, ventilation vents, feeder windows of the equipment room, or water pipes. Ensure that no liquid enters the equipment to prevent faults or short circuits.

Before installing and commissioning batteries, prepare firefighting facilities, such as fire sand and carbon dioxide fire extinguishers, according to construction standards and regulations. Before putting into operation, ensure that firefighting facilities that comply with local laws and regulations are installed.

Before unpacking, storage, and transportation, ensure that the packing cases are intact and the batteries are correctly placed according to the labels on the packing cases. Do not place a battery upside down or vertically, lay it on one side, or tilt it. Stack the batteries according to the stacking requirements on the packing cases.

Ensure that the batteries do not fall or get damaged. Otherwise, they will need to be scrapped.

After unpacking batteries, place them in the required direction. Do not place a battery upside down or vertically, lay it on one side, tilt it, or stack it. Ensure that the batteries do not fall or get damaged. Otherwise, they will need to be scrapped.

Tighten the screws on copper bars or cables to the torque specified in this document. Periodically confirm whether the screws are tightened, check for rust, corrosion, or other foreign objects, and clean them up if any. Loose screw connections will result in excessive voltage drops and batteries may catch fire when the current is high.

After batteries are discharged, charge them in time to avoid damage due to overdischarge.

2.6 Operation and Maintenance

The Company shall not be liable for any damage or other consequences to the batteries it provides due to the following reasons:

	container user manual	Ver.	1.0
		Page.	17
		effective date	Sept.10th.2024

● Batteries are damaged due to force majeure such as earthquakes, floods, volcanic eruptions, debris flows, lightning strikes, fires, wars, armed conflicts, typhoons, hurricanes, tornadoes, and other extreme weather conditions.
● Batteries are damaged because the onsite equipment operating environment or external power parameters do not meet the environment requirements for normal operation, for example, the actual operating temperature of batteries is too high or too low, or the power grid is unstable and experiences outages frequently.
● Batteries are damaged, fall, leak, or crack due to improper operations or incorrect connection.
● After being installed and connected to the system, the batteries are not powered on in time due to your reasons, which causes damage to the batteries due to overdischarge.
● Batteries are damaged because they are not accepted in time due to your reasons.
● Batteries are damaged due to your or a third party's reasons, for example, relocating or reinstalling the batteries without complying with the Company's requirements.
● You change the battery use scenarios without notifying the Company.
● You connect extra loads to the batteries.

● The battery storage period has exceeded the upper limit.
● The battery warranty period has expired. You are advised not to use a battery whose warranty period has expired, as this poses safety risks.
● You set battery operating parameters incorrectly.
● You use batteries of different types together, causing acceleration of capacity attenuation.
For example, you use our batteries together with batteries of other vendors or with batteries of different rated capacity.
● You maintain batteries improperly, causing frequent overdischarge; you expand the load capacity without notifying us; or you have not fully charged the batteries for a long time.
● You do not perform battery maintenance based on the operation guide, such as failure to check battery terminals regularly.
● Batteries are damaged because you do not store them in accordance with storage requirements (for example, in an environment that is damp or prone to rain).
● Batteries are not charged as required during storage due to your reasons, resulting in capacity loss or other irreversible damages to the batteries. To ensure battery safety and battery management accuracy, use batteries provided by the Company. The Company is not responsible for any faults of batteries not provided by it.
● Before installing, operating, and maintaining batteries, read the battery manufacturer's instructions and comply with their requirements. The safety precautions specified in this document are highly important and require special attention. For additional safety precautions, see the instructions provided by the battery manufacturer.
● Use batteries within the specified temperature range. When the ambient temperature of the batteries is lower than the allowed range, do not charge the batteries to prevent internal short circuits caused during low-temperature charging.

Consistent energy storage concept

	container user manual	Ver.	1.0
		Page.	18
		effective date	Sept.10th.2024

● Before unpacking batteries, check whether the packaging is intact. Do not use batteries with damaged packaging. If any damage is found, notify the carrier and manufacturer immediately.
● Install batteries within 24 hours after unpacking. If the batteries cannot be installed in time, put them in the original packaging and place them in a dry indoor environment without corrosive gases. Power on the ESS within 24 hours after installation. The process from unpacking batteries to powering on the system must be completed within 72 hours. During routine maintenance, ensure that the power-off time does not exceed 24 hours.
● Do not use a damaged battery (such as damage caused when a battery is dropped, bumped, bulged, or dented on the enclosure), because the damage may cause electrolyte leakage or flammable gas release. In the case of electrolyte leakage or structural deformation, contact the installer or professional O&M personnel immediately to remove or replace the battery.
● Do not store the damaged battery near other devices or flammable materials and keep it away from non-professionals.
● Before working on a battery, ensure that there is no irritant or scorched smell around the battery.
● When installing batteries, do not place installation tools, metal parts, or sundries on the batteries.
● After the installation is complete, clean up the objects on the batteries and the surrounding area.
● Do not install battery packs on rainy, snowy, or foggy days. Otherwise, the battery packs may be corroded by moisture or rain.
● If batteries are exposed to water accidentally, do not install them. Instead, transport the batteries to a safe isolation point and dispose of them in a timely manner.
● Before installing a battery pack, check that its enclosure is not deformed or damaged.
● Check whether the positive and negative battery terminals are grounded unexpectedly. If so, disconnect the battery terminals from the ground.
● Do not perform welding or grinding work around batteries to prevent fire caused by electric sparks or arcs.
● If batteries are left unused for a long period of time, store and charge them according to the battery requirements.
● Do not charge or discharge batteries by using a device that does not comply with local laws and regulations.
● Keep the battery loop disconnected during installation and maintenance.
● Monitor damaged batteries during storage for signs of smoke, flame, electrolyte leakage, or heat.
● If a battery is faulty, its surface temperature may be high. Do not touch the battery to avoid scalds.
● Do not stand on, lean on, or sit on the top of the equipment.
● In backup power scenarios, do not use the batteries for the following situations: – Medical devices substantially important to human life
– Control equipment such as trains and elevators, as this may cause personal injury
– Computer systems of social and public importance
– Locations near medical devices

Consistent energy storage concept

– Other devices similar to those described above

Short Circuit Protection

● When installing and maintaining batteries, wrap the exposed cable terminals on the batteries with insulation tape.

● Avoid foreign objects (such as conductive objects, screws, and liquids) from entering a battery, as this may cause short circuits.

Leakage Handling

Electrolyte leakage may damage the equipment. It will corrode metal parts and boards, and ultimately damage the boards.
Electrolyte is corrosive and can cause irritation and chemical burns. If you come into direct contact with the battery electrolyte, do as follows:
● Inhalation: Evacuate from contaminated areas, get fresh air immediately, and seek immediate medical attention.
● Eye contact: Immediately wash your eyes with water for at least 15 minutes, do not rub your eyes, and seek immediate medical attention.
● Skin contact: Wash the affected areas immediately with soap and water and seek immediate medical attention.
● Intake: Seek immediate medical attention.

Recycling
● Dispose of waste batteries in accordance with local laws and regulations. Do not dispose of batteries as household waste. Improper disposal of batteries may result in environmental pollution or an explosion.
● If a battery leaks or is damaged, contact technical support or a battery recycling company for disposal.
● If batteries are out of service life, contact a battery recycling company for disposal.
● Do not expose waste batteries to high temperatures or direct sunlight.
● Do not place waste batteries in environments with high humidity or corrosive substances.
● Do not use faulty batteries. Contact a battery recycling company to scrap them as soon as possible to avoid environmental pollution.

3. Product Description

3.1 Model Description

The container-2508kW/5015kWh comprises battery clusters (or battery racks, which is composed by battery packs), a switch gear and an integrated power distribution panel (or Integrated Control Panel).

Consistent energy storage concept

	container user manual	Ver.	1.0
		Page.	20
		effective date	Sept.10th.2024

The auxiliary control system includes thermal management system and fire suppression system and its auxiliary control system.



The energy storage liquid-cooled battery container compartment consists of :
1)314Ah Lithium-ion Phosphate (LiFePO4, or LFP) Cells in series to form a 1P104S liquid-cooled Battery Pack.
2) 4 liquid-cooled Battery Packs are connected in series to form a 1P416S Battery Rack (or Battery Cluster),
3) 12 Battery Racks in the container are connected in parallel to form a whole 1331.2V/5.015MWh battery ESS Container.
4) The Battery System is arranged with the first, second, and third-level BMS to form a Three-Level battery management structure, and form a system-level control and management.
The liquid-cooled energy storage container is an important platform product with the temperature control technology for large-scale energy storage, which can meet the needs of factory production,testing, and overall hoisting and transportation of energy storage containers.

3.2 Label Description

label	name	interpretation
	Electric Shock Warming	High voltage may occur after the device is powered on. Only qualified and trained electrical technicians are allowed to install and operate the device.
	Dangerous Warning	Indicates the device might cause harmful to the personnel. Only qualified and trained electrical technicians are allowed to install and operate the device.

	container user manual	Ver.	1.0
		Page.	21
		effective date	Sept.10th.2024

	Explosive Warning	Indicates the device might cause explosion. Only qualified and trained electrical technicians are allowed to install and operate the device.
	Grounding Symbol	Indicates the position for connecting the ground cable.
	ADR transportation warning label – diamond-shape label	Helps other traffic participants identify and keep away from hazardous sources in a timely manner to reduce the risk of accidents.
	Hoisting Mark	Indicates the position for hoisting the battery ESS container.
	Water Firefighting Mark	Indicates this is to be connected with fire hose for firefighting.
	Emergency Stop Mark	Indicate the button is only for emergency stop. It is a fail-safe control switch that when de-energized, will stop the operation of the equipment
	Height label	The equipment is high. You may need tools such as an insulation stool or a step ladder to facilitate operation.
	Height (or mind the step) warning label	Indicates that the container height is greater than 2.6m to alert the personnel during transportation and operation.

3.3 Function and Features

Functions

The container-2508kW/5015kWh Battery Energy Storage System can be charged and discharged via the DC power rectified by the PCS for applications such as power grid peak shaving and frequency regulation.

Consistent energy storage concept

Each battery rack is connected to the Third-Level BMS that manages the charge and discharge of the rack independently, improving the available capacity and system availability.
Battery Charge: The PCS is connected to the rack controller and send commands to charge the batteries.
Battery Discharge: When grid power is insufficient for the loads, the system controls the batteries to supply power to the loads through the PCS.
The input and output ports of the ESS are high-voltage direct current (HVDC) ports.
The ESS is a prefabricated all-in-one Lithium-ions Battery Container System that integrates the prefabricated modular structure system, power supply, and distribution system, monitoring system, environmental control system, fire suppression system and integrated cabling system.

Features

The container-2508kW/5015kWh Battery Energy Storage System has the following features:

- High Energy Density: it has very high volumetric energy density, and can be configured in the way by using double containers in parallel to save space.

- Standardization: It has modular design, reasonable layout, which is convenient for maintenance. The standard containers are easy to load and unload, transport and install.

- Ultra-high Security: it has cell-level temperature monitoring, and cell-level thermal barrier. It also has pack-level submersion suppression, with fully coverage by submerged gas extinguishing and whole container fire sprinkler.

- Intelligent Temperature Control Technology: It has modular adjustable piping for excellent temperature uniformity. The BMS+liquid cooling linkage control provides high efficiency and energy saving.

3.4 Appearance

The following is the appearance of the BESS Container (without the Fan Cover on the left side

	container user manual	Ver.	1.0
		Page.	23
		effective date	Sept.10th.2024

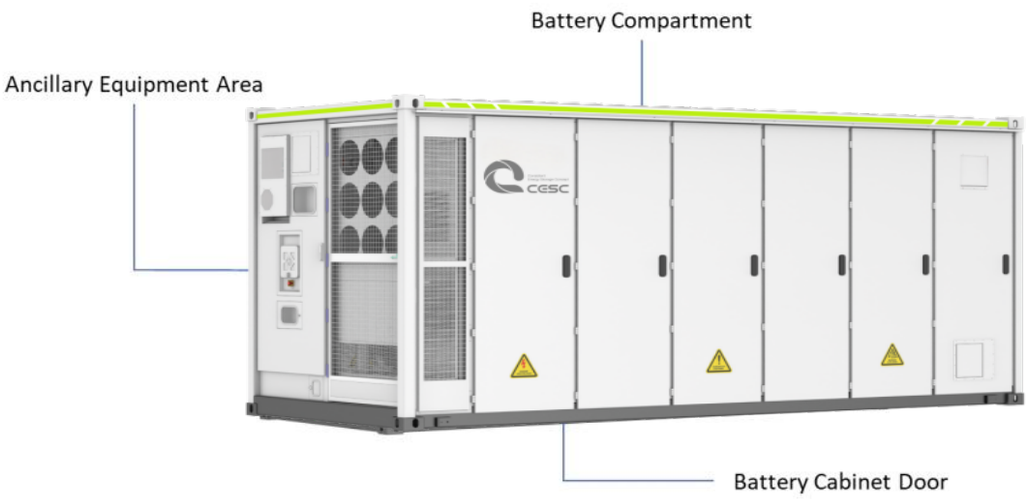

■ Front View



■ Rear View



Consistent energy storage concept

	container user manual	Ver.	1.0
		Page.	24
		effective date	Sept.10th.2024

- Left Side View

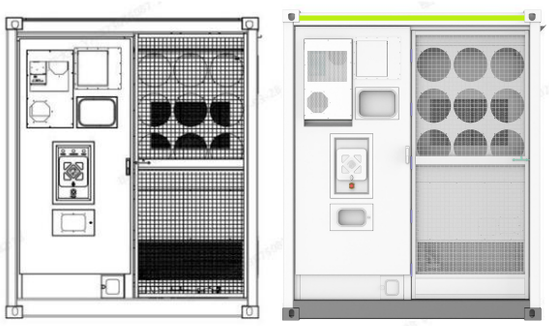

- Right Side View

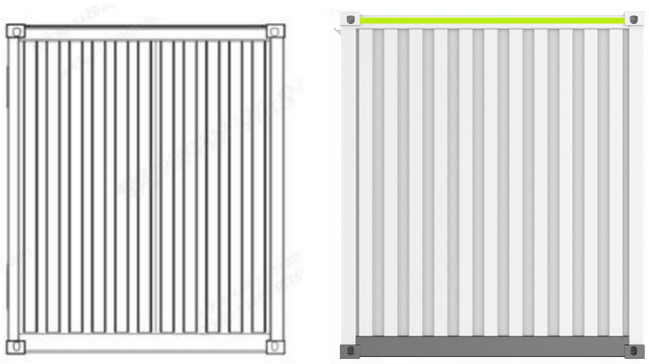

- Top View (With Cooling System and Fire Extinguish System separated)

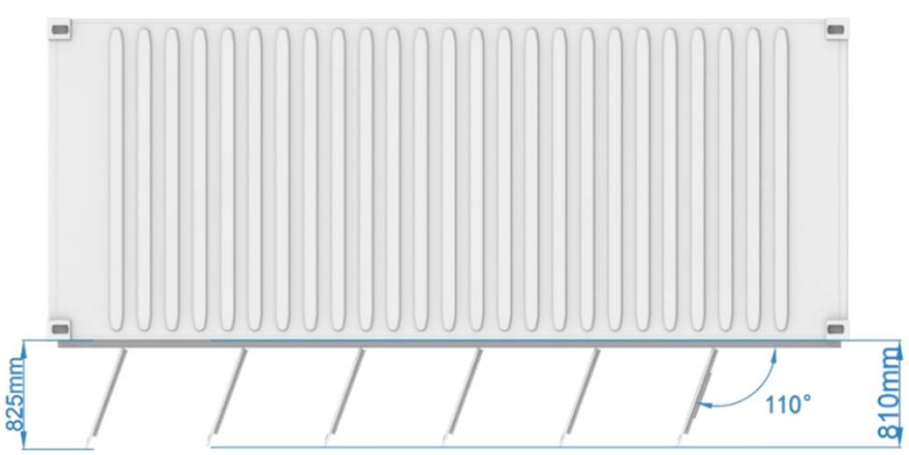

	container user manual	Ver.	1.0
		Page.	25
		effective date	Sept.10th.2024

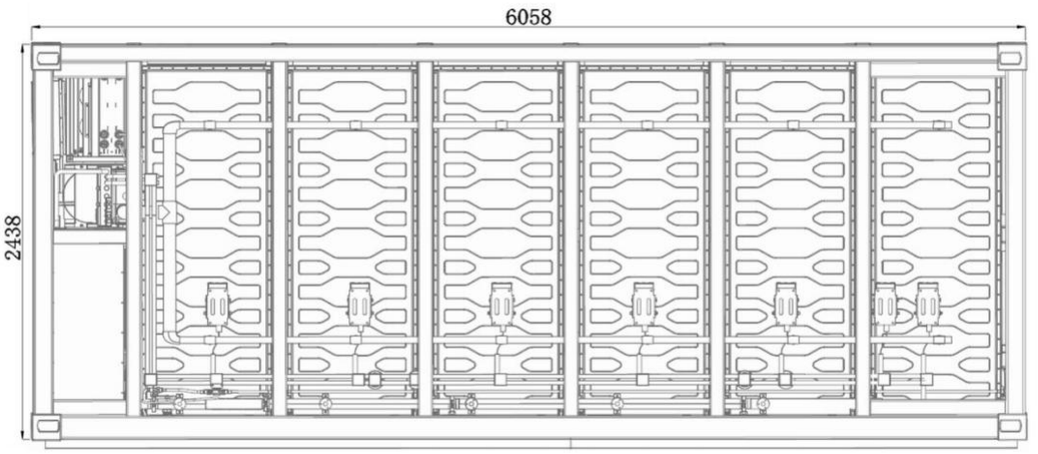

NOTE

The site foundation must be designed by professional technical personnel such as those from a design institute. The technical personnel can refer to the foundation drawings of the Company. Contact the product manager of the Company to obtain the drawing

3.5 Components

The Battery ESS has the following key components:

● Battery Container and Battery Racks (or Battery Clusters)

● Fire Suppression System (Water Spray Pipeline, Smoke Detector, Temperature Heat Detector, Fire Cylinder, Auxiliary Control Panel, Exhaust System, etc.)

● switch gear

● Integrated Control Panel

● Environmental Control System (Liquid Cooling Unit, Air Conditioner)

● Monitoring System (key information showed on the LCD display on the front panel of Integrated control panel)

Overview of Key Component

	container user manual	Ver.	1.0
		Page.	26
		effective date	Sept.10th.2024

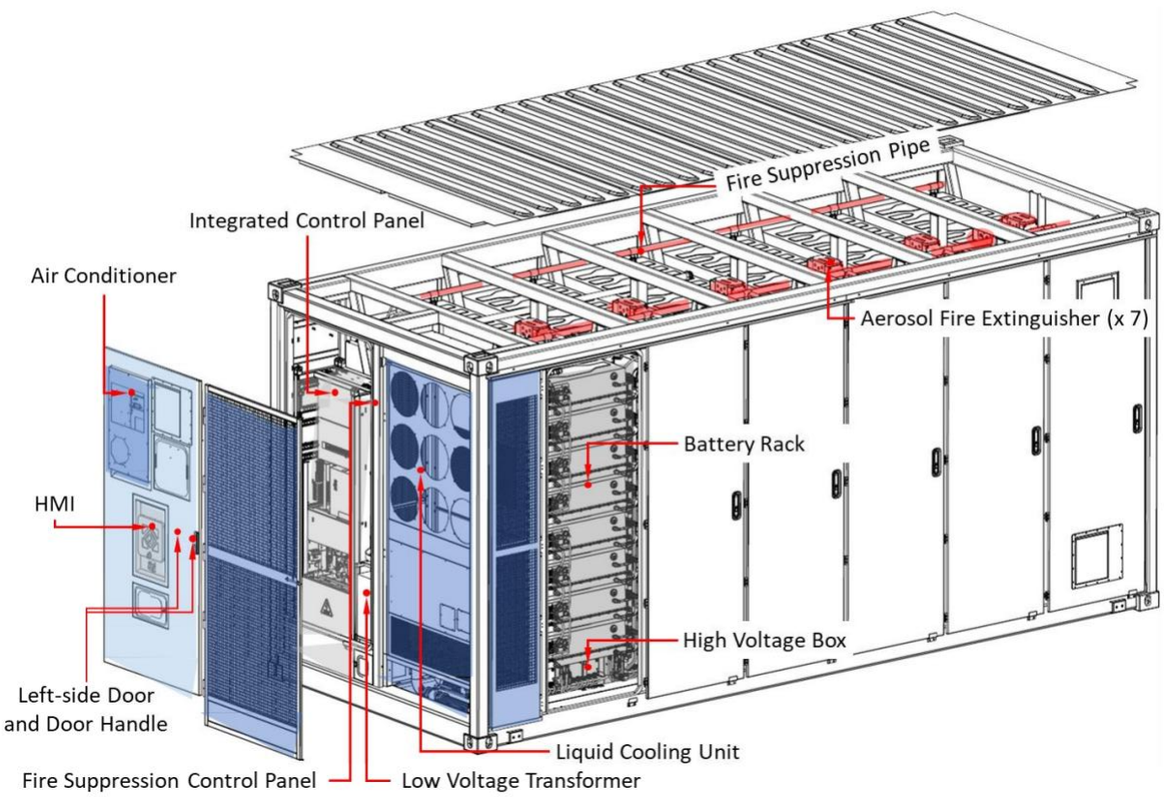

3.5.1 technical parameters

role	Items	Parameters	Remark
Cell	Chemistry	LFP	
	Nominal capacity (Ah)	314	0.5P, 25℃
	Nominal energy (Wh)	1004.8	0.5P, 25℃
	Nominal voltage (V)	3.2	
Module	Configuration	1P104S	
	Nominal capacity (Ah)	314	0.5P, 25℃
	Nominal energy (kWh)	104.4	0.5P, 25℃
	Nominal voltage (V)	332.8	
ESS Container	Configuration	12P416S	

	container user manual	Ver.	1.0
		Page.	27
		effective date	Sept.10th.2024

Nominal energy (kWh)	5015.9	0.5P, 25℃
Nominal voltage (V)	1331,2	
Operation voltage (V)	1040~1497.6	T > 0℃
	1164.8~1497.6	T ≤ 0℃
Operation range of Recommended voltage(V)	1164.8~1497.6	
Nominal charge/discharge power rate	0.5P	
Energy efficiency	≥ 93%	0.5P,25℃
Communication interface	CAN/RS485/Ethernet	
Communication protocol	Modbus-RTU、Modbus-TCP、IEC61850	
Cooling way	Liquid cooling	
Coolant	50%Water & 50%Glycol	
IP level	Container: IP55 Module: IP67	
Discharge temperature range(℃)	-30~60	
Charge temperature range (℃)	0~55	
Storage temperature range (℃)	-20~45	Recommended
Dimension (mm)	20ft standard container 6058X2438X2896	Sea shipping
Total weight (kg)	< 44000	

Consistent energy storage concept

	container user manual	Ver.	1.0
		Page.	28
		effective date	Sept.10th.2024

	certifications	IEC62619、IEC62477、 IEC63056、IEC61000、 UL1973、UL9540A、NFPA855、 UN38.3	

3.5.2 switch gear

The switch gear box is a cluster-level control unit tailor-designed and made by CESC New Energy Technology for the liquid-cooled energy storage battery system.

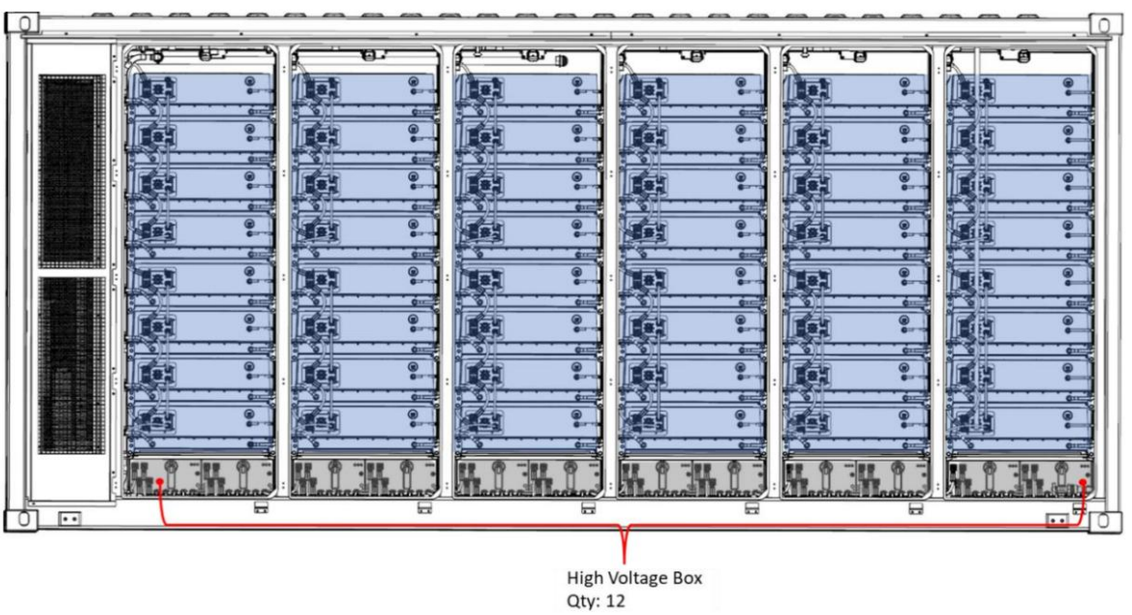

It is an intermediate unit connecting the battery pack and the Integrated Control Panel. Isolation switches, relays, fuses, secondary BMS and switching power supplies are installed in the energy storage switch gear box.

The electrical characteristics, heat dissipation performance, waterproof performance, safety performance and operability and maintainability of each component have been fully considered in the design of the energy storage high-voltage box, and the space layout is reasonable, with the characteristics of compact structure, flexible configuration, safety and reliability.

The energy storage high-voltage box has DC24V power supply interface, CAN communication interface, etc., to realize the data communication, control and protection of the battery management system.

Item	specification

	container user manual	Ver.	1.0
		Page.	29
		effective date	Sept.10th.2024

appearance	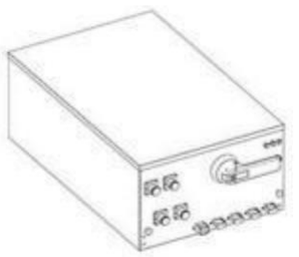
Dimension (W x H x D) (mm)	390×614×200mm
Weight (kg)	27kg
Voltage Range (V)	⩽1500VDC
Nominal Current (A)	250A
Working Temperature Range	-10℃ ~ +40℃
Altitude (m)	⩽2000m
Communication Protocol	CAN

Function Description

● Supports AC 220V (480V/380V is used for single phase) Power Supply.

● Supports CAN Communication Protocol.

● Supports electric opening control and condition monitoring of circuit breakers, and enables reliable breakpoint maintenance.

● Equipped with power indicator, operation indicator and fault indicator to realize the visualization of product status.

● Equipped with high-voltage fast plug-in to achieve fast, safe and reliable connection.

● Available in standardized sizes：390×615×230mm (Width x Depth x Height).

Key Components Parameters

	container user manual	Ver.	1.0
		Page.	30
		effective date	Sept.10th.2024

Item	Description	Parameter	Qty.	Unit	Note
1	Isolating Switch	NDG3VH-250，1500V	1	pc	
2	DC Contactor	DC1500V(max)/350A，No Polarity	2	pc	
3	Fuse	DC 1500V/315A	2	pc	
4	Current Sensor	Range±300A	1	pc	
5	Positive Pole Socket	DC1500V/250A，Orange Color	2	pc	
6	Negative Pole Socket	DC1500V/250A，Black Color	2	pc	
7	BMS Master Unit	Developed by Gotion	1	pc	

External Front Panel

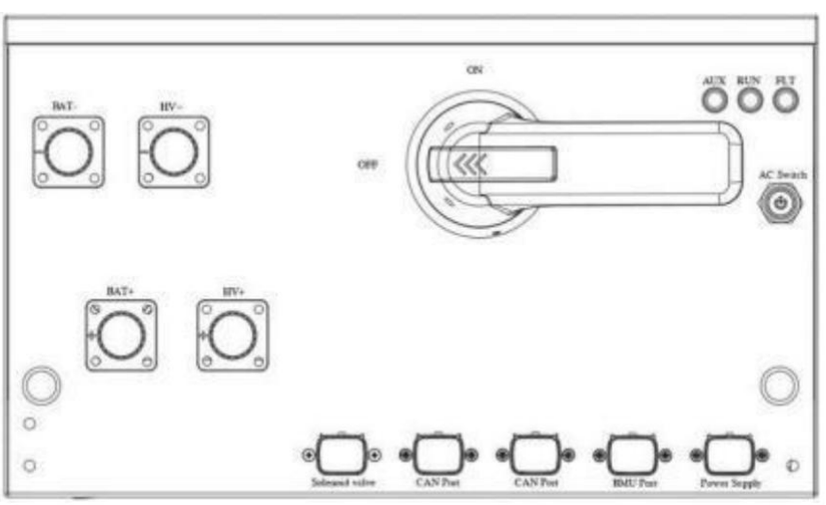

The switch gear box external front panel is shown in the figure above, and the main interfaces are as follows:

	container user manual	Ver.	1.0
		Page.	31
		effective date	Sept.10th.2024

Interface Definition Table

12	GND	Installation Grounding Point	
13	ON/OFF	ON/OFF Status for Circuit Breaker connector	
2	BAT-	PACK Negative Pole Connector	
3	HV+	External output Positive connector	
4	HV-	External output Negative connector	
5	AUX	Auxiliary power LED	The green light is always on, indicating the power supply is normal
6	RUN	Running LED	A solid green light indicates that the main output relay in the high-voltage box is closed. the light is off when the relay is off.
7	FLT	Fault LED	A solid red light indicates that the system has fault
8	Solenoid Valve	Solenoid valve control interface	Connect to the solenoid valve on the battery pack
9	CAN Port	Cascaded CAN communication interface	CAN bus, hand-in-hand
10	BMU Port	BMU (1st Level BMS) communication interface	
11	Power Supply	Power Supply for High Voltage Box	AC220V Input

3.5.3 Integrated Control Panel

The Integrated Control Panel is tailored for our standard liquid-cooled battery energy storage container.
It is an intermediate unit connecting the high-voltage box and the energy storage converter;
The Integrated Control Panel is composed of battery system-level isolation switches, fuses, three-level BMS, UPS power supplies, etc.
The electrical characteristics, heat dissipation performance, safety performance and operability and maintainability of each component have been fully considered in the design of the Integrated Control Panel, and the space layout is reasonable, with the characteristics of compact structure, flexible configuration, safety and reliability

	container user manual	Ver.	1.0
		Page.	32
		effective date	Sept.10th.2024

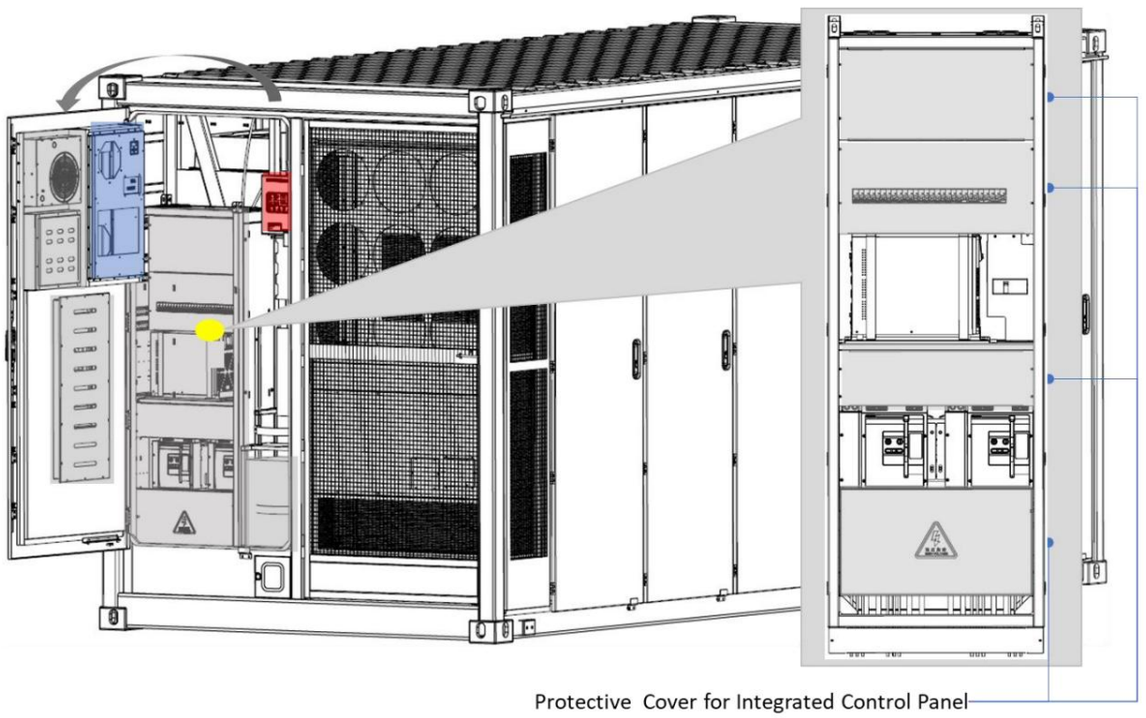

The 3 rd-Level BMS installed in the Integrated Control Panel has CAN, RS-485 and RJ45 Ethernet communication interfaces, which can realize the communication function with the switch gear box, PCS or EMS, and realize the data communication, control and protection of the storage system.

Description of the Function

● AC480V is used for power supply;
● Support AC220V power supply of Rack-level high-voltage control box;
● Support CAN communication function for the high-voltage control box of the Battery Rack, to realize the monitoring and management of the BMS;
● Support communication with EMS, PCS and other external devices to realize the information exchange;
● Support communication backbone node control, support CAN, RS-485, RJ45 Ethernet communication protocols;
● Support digital signal input detection, which can detect switching status, fire alarm and other signals;
● Reserve the installation space of UPS backup battery in the Integrated Control Panel;
● The power line and control line are using “bottom-in and bottom-out”, and the bottom plate is removable;
● Emergency stop control function;
● Integrated Control Panel is equipped with control power supply indication, operation indication and fault indication;

	container user manual	Ver.	1.0
		Page.	33
		effective date	Sept.10th.2024

Key Components Parameters

Item	Description	Parameter	Qty	Unit	Note
1	DC Circuit Breaker	1500VDC1600A	2	pc	
2	Fuse	1500VDC1800A	4	pc	
3	3rd-Level BMS	Gotion	2	set	
4	UPS	3KVA w/ Backup Power for 30min	1	pc	
5	Switch Power Supply	240W (output power)	1	pc	

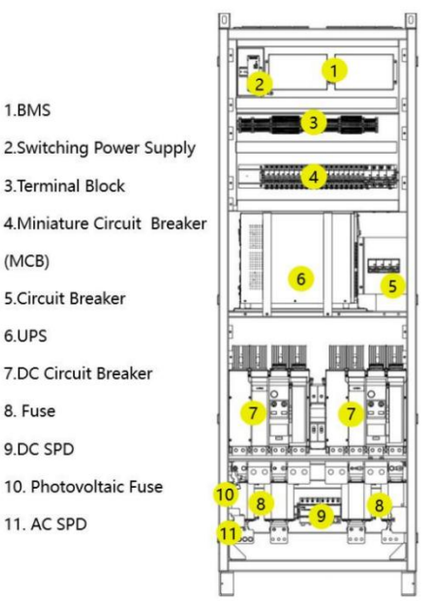

■ Grounding the Integrated Control Panel's Cabinet

As shown in the figure, the Integrated Control Panel's grounding connection point diagram, the grounding tab is connected with the cabin housing, thus, the effect of the Integrated Control Panel's grounding is achieved through the cabin housing grounding.

	container user manual	Ver.	1.0
		Page.	34
		effective date	Sept.10th.2024

1.BMS
2.Switching Power Supply
3.Terminal Block
4.Miniature Circuit Breaker (MCB)
5.Circuit Breaker
6.UPS
7.DC Circuit Breaker
8. Fuse
9.DC SPD
10. Photovoltaic Fuse
11. AC SPD
12. Terminal Block

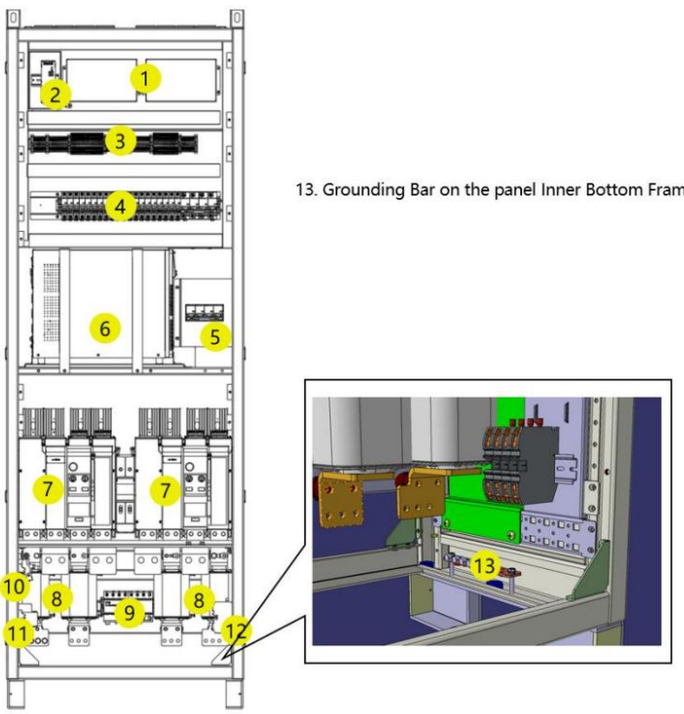

■ Grounding battery rack

The Battery Rack is welded on the Battery Container which is bonded together with the Battery Container. Refer to 5.5.2 Grounding the ESS on Battery Container's Grounding.

NOTICE

* The grounding connection of the busbar control cabinet has been connected before leaving the factory, and the customer only needs to check whether the grounding wire is connected!

3.5.4 Monitoring System

Consistent energy storage concept

	container user manual	Ver.	1.0
		Page.	35
		effective date	Sept.10th.2024

The monitoring system can display the operation information of air conditioning, fire protection, liquid cooling unit and other equipment in the system, and completely display the information of various data of the battery, including current, temperature, voltage, etc.

Appearance of the Monitoring System

The monitoring system is mounted on the left side of the container.

Item	Appearance
Front Appearance	
Back Plate	
Installation Dimensions (mm)	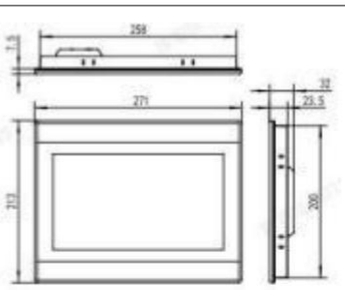

The Monitoring System has the following main functions:

- Monitor battery information in the Battery ESS.
- Monitor the status of liquid cooling units, fire suppression system, and the status other external nodes.
- Manage the status of system operation, faults, alarms, etc
- Monitor charge and discharge status of the battery.
- Monitor the status of the input and output ports of the 3rd-level BMS
- Monitor the communication status of the primary and secondary level BMS

	container user manual	Ver.	1.0
		Page.	36
		effective date	Sept.10th.2024



3.5.5 BMS

BMS in the Battery ESS adopts a three-level hierarchical architecture, to perform the following functions:

- Real-time monitoring of battery voltage, temperature, total battery cluster voltage, current, insulation, etc.;
- Insulation resistance detection;
- Fault diagnosis, alarm, fault protection and recording of battery system;
- Self-test;
- Protection function of preventing overcharge, over-discharge, over-current and so on of the battery system;
- Anti-circulation control between Battery Racks;
- SOC/SOH estimation;
- Passive equalization and active equalization;
- Timing alignment;
- Set the battery operating parameters, alarms, and protection values locally or remotely;
- Event recording, data storage, and display;
- Communication with PCS, EMS and monitoring devices;

	container user manual	Ver.	1.0
		Page.	37
		effective date	Sept.10th.2024

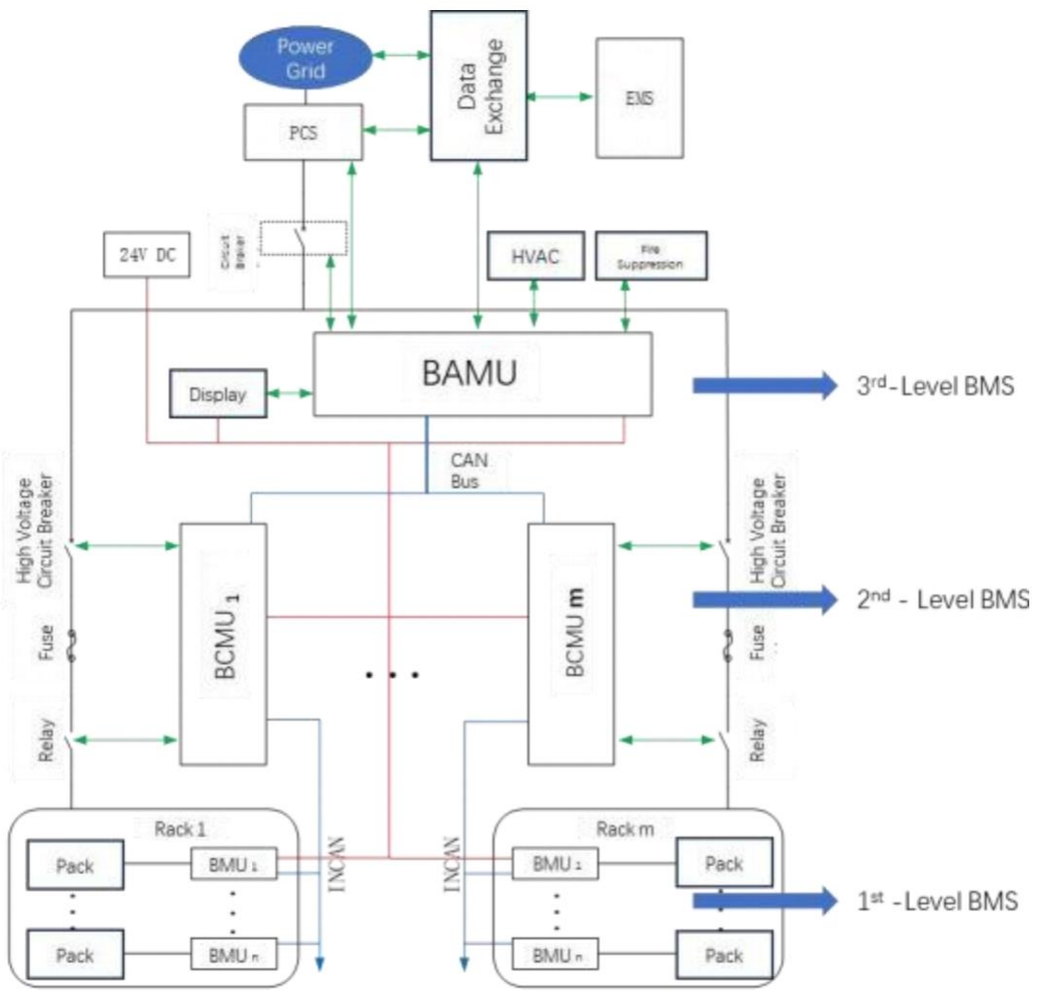

3.5.5.1 First-Level BMS

The First-level BMS is a slave control unit with integrated passive balancing function suitable for lithium battery management system:

- Supports 54 single-cell (cell) voltage monitoring.
- Support 30 channels of NTC (10K) temperature monitoring.
- Support passive balancing, equalization current ≥ 100mA.
- Thermal management is supported, and the fan speed can be adjusted according to different temperature levels,
- Support Bootloader upgrade, firmware upgrade can be carried out online through CAN.
- Support single voltage (overvoltage, undervoltage), temperature (overtemperature), communication and other alarm functions.
- Support the detection function of collecting wiring harness (voltage) drop

	container user manual	Ver.	1.0
		Page.	38
		effective date	Sept.10th.2024

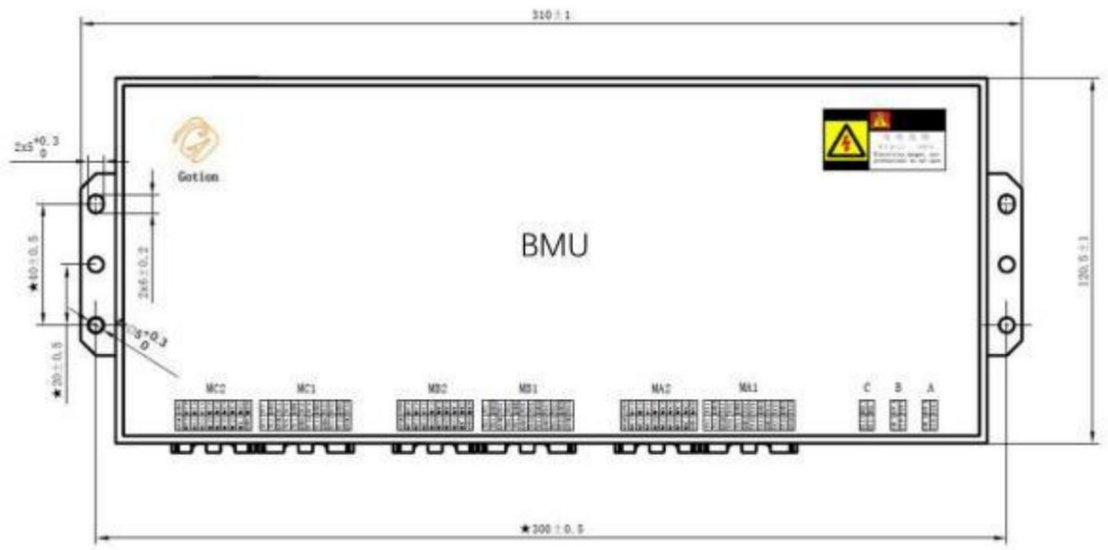

First-Level BMS Specification

Item	Description		Parameter				Note
			Minimum	Typical	Maximum	Unit	
1	Working Power	Nominal Voltage	9	-	32	Vdc	
		Nominal Power Consumption	-	-	1	W	DI/DO not connected
2	Data Acquisition – Single Cell Voltage Data	Channels	3	-	54		Voltage for battery modules should be above (>) 6V
		Range	1.5	-	4.5		
		Accuracy	≤±0.1%FS, Voltage≤5mV				
3	Data Acquisition – Temperature	Channels	-	-	30	Channel	
		Range	-40	-	125	℃	
		Accuracy	-	±1	-	℃	±1℃@-25℃~65℃; ±2℃@-40℃~-25℃, or 65℃~125℃

4	DO	Channels	-	-	1	Channel	
		Output Current (A)	-	-	1	A	Peak Current 5A@100ms
5	DI	Channels	-	-	1	Channel	
		High Level	9	24	32	Vdc	

3.5.5.2 Second-Level BMS

The Second-level BMS is the BMS at the Battery Rack Level. It is mainly responsible for real-time collection of the total voltage, current, insulation resistance, and switching status of the Battery Rack.

● completes the state estimation and balancing strategy judgment of the SOC/SOH and other states of the Battery Rack, by acquiring the voltage and temperature data of the single cell in the Battery Rack uploaded by the first-level BMS,

● supports the fault diagnosis of the battery system, and can realize the safety control function of protection equipment, such as circuit breakers and relays.

● communicate with the upper level battery array management system (third-level BMS) to make automatic responses according to the established strategy, so as to ensure the safe, stable and reliable operation of the Battery ESS.

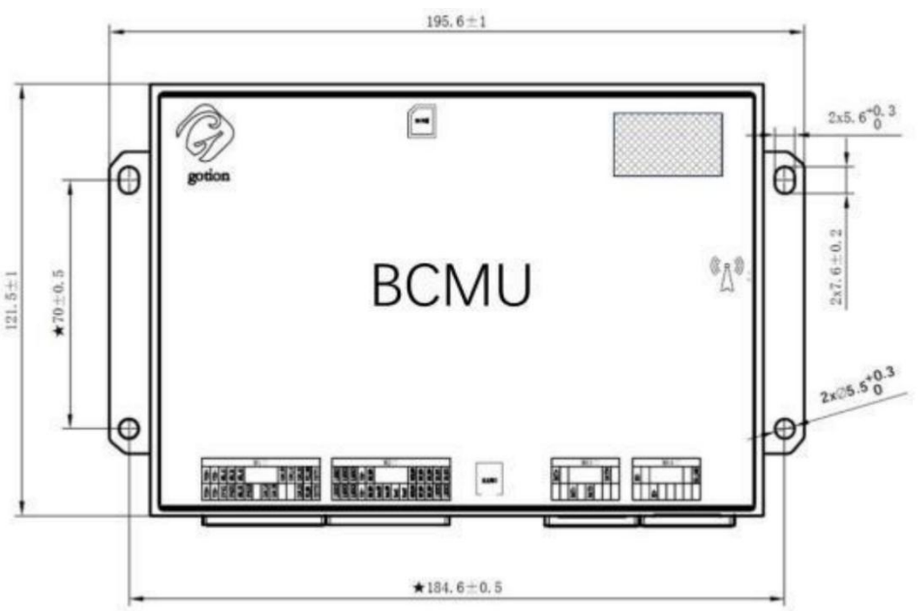

	container user manual	Ver.	1.0
		Page.	40
		effective date	Sept.10th.2024

Second-Level BMS Specification

Item	Description	Specification
1	Dimension	195 mm x 120 mm x 20.8mm
2	Weight	800g
3	Material	Sheet metal with ordinary spray paint
4	Insulation Resistance	>10MΩ 1000VDC
5	Withstand Voltage	3280V AC @ 50Hz
6	Power Supply Voltage	24V DC
7	Power Consumption	<3W
8	Slave BMS can be connected	Max. 64 Slave BMS
	Communication Protocol	2 x Insulated CAN / 2xInsulated 485 / 1xEthernet /
10	Baud Rate	250kbps / CAN; 9600Kbps/RS485
11	Total Voltage Acquisition Accuracy (Rack Level)	⩽±0.5%FS, maximum error⩽5V
12	Current Acquisition Accuracy (Rack Level)	⩽±0.5%FS, maximum error⩽3A
13	Insulation Resistance Acquisition Accuracy (Rack Level)	Relative error ⩽ 20% when nominal total voltage ⩾ 400V; Relative error⩽30% when nominal total voltage<400V;
14	Working Environment	Temperature: -10 ~ +55℃; Humidity: < 95% (RH, no condensing) Magnetic Field: < 400A/m Corrosive, flammable and explosive gases are not allowed around

3.5.2.3 Third-Level BMS

The Third-Level BMS (BAMS) is the control host suitable for the battery management system of the energy storage power station.

● communicate with the second-level host (Second-level BMS) to obtain battery cluster data such as battery voltage, current, temperature, and SOC in real time.
● monitor the operation status of air conditioners, fire-fighting equipment, circuit breakers and other equipment with the help of network communication,
● complete relevant data analysis, alarm processing, parameter independent setting and change and time storage functions.

	container user manual	Ver.	1.0
		Page.	41
		effective date	Sept.10th.2024

● cooperate with the PCS host, energy storage mobilization monitoring system (EMS), etc., according to the actual power output needs and the SOC optimization of each group of batteries to comply with the control strategy,

● automatically adjust, realize linkage control, to ensure the safe and stable operation of the power station, and promote the extension of battery life.

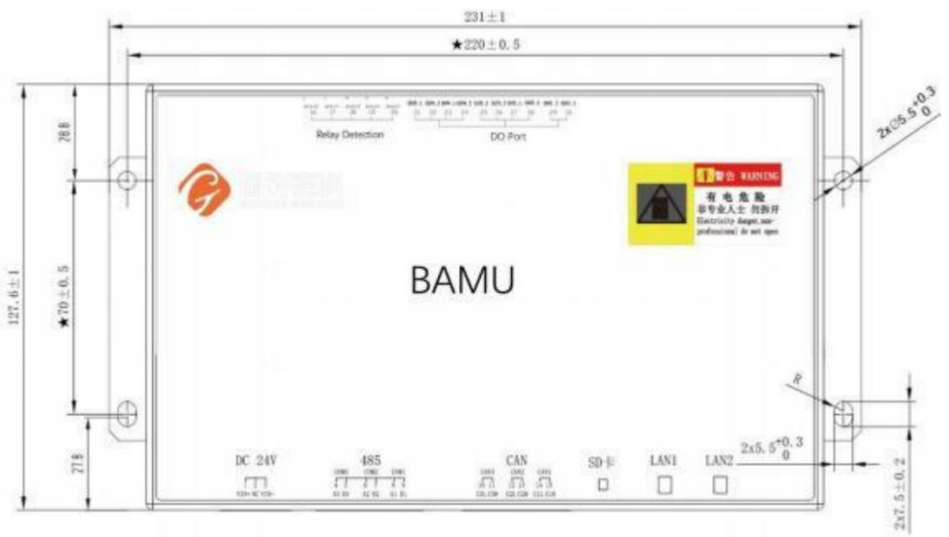

Third-Level BMS Specification

	container user manual	Ver.	1.0
		Page.	42
		effective date	Sept.10th.2024

Third-Level BMS Specification

Item	Description	Specification
1	Dimension	231.0 mm x 125.0 mm x 20.8mm
2	Weight	1800g
3	Material	Sheet metal with ordinary spray paint
4	Insulation Resistance	>10MΩ 1000VDC
5	Withstand Voltage	4380V AC @ 50Hz
6	Power Supply Voltage	24V DC
7	Power Consumption	<5W
8	Communication Port	2x10/100M LAN(RJ45), 3 x isolated CAN, 3 x isolated RS485
9	Baud Rate	9600bps/RS485, 250kbps / CAN, 100Mbps/LAN
10	Data Logging Interval	≤60 seconds
11	Event Log Database	>5000 events, including exception class, occurrence time, protection action
12	Query method	On-site Panel Inquiry, Remote computer queries.
13	Alarm mode	Light alarm, and display alarm prompt
14	Display	10.2" TFT LCD Screen, resolution (1024 x 600)
15	Working Environment	Temperature: -10 ~ +55℃; Humidity: < 95% (RH, no condensing) Magnetic Field: < 400A/m Corrosive, flammable and explosive gases are not allowed around

3.5.6 Environmental Control System

At the ESS container level, the temperature of the whole system is controlled using air conditioning and liquid cooling temperature control system.
The liquid cooling system consists of the liquid cooling unit, the piping system and the battery pack cooling system, so as to achieve temperature control of the battery pack.

	container user manual	Ver.	1.0
		Page.	43
		effective date	Sept.10th.2024

■Liquid Cooling Unit-Air Flow Direction



■Liquid Cooling Unit And Cooling Pipes



At the Battery Pack level, the Battery Pack adopts the second generation of CESC New Energy Technology energy storage

liquid-cooled standard box, which integrates the liquid-cooled channel on the bottom plate of the box, to improve the efficiency of heat conduction and reduce the temperature variation of the system.

At the Battery Rack level, the liquid cooling pipes are connected in parallel between the Battery Packs that make up the Battery Rack, so that the inlet water temperature of the Battery Pack in the Rack is consistent and the temperature difference between the single Rack is reduced.

At the ESS container level, the liquid-cooled system between all the Racks is connected in parallel.

By using a customized refrigeration unit, the flow rate distributed in each Battery Pack is controlled at the same flow rate, which ensures the cooling flow rate of the Battery Pack while minimizing the temperature difference between the Battery Packs inside the container.

Top and Front view of Water Cooling System

View	Illustration

Consistent energy storage concept

	container user manual	Ver.	1.0
		Page.	44
		effective date	Sept.10th.2024

Top View	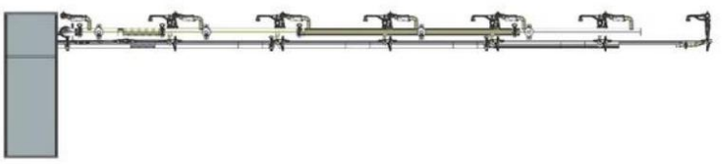
Front View	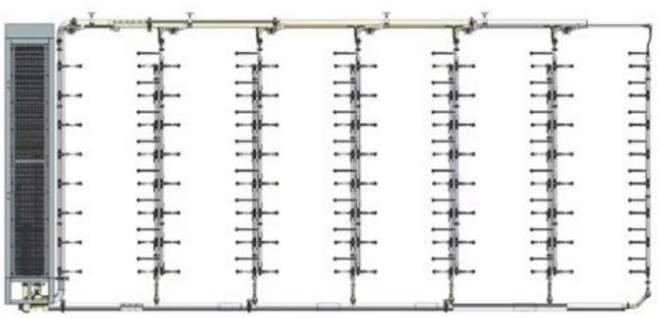

3.5.6.1 Air Conditioner

	container user manual	Ver.	1.0
		Page.	45
		effective date	Sept.10th.2024

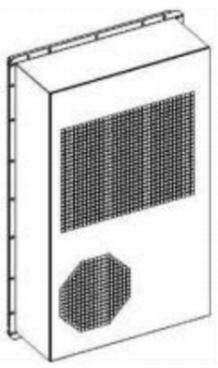

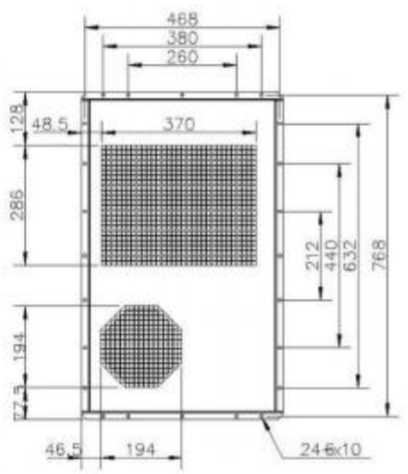

Specification

Item	Unit	Specification
Dimension (Height x Width x Depth)	Millimeters (mm)	783 x 483 x 200
Weight	Kg	35
Installation		Outdoor
Working Temperature	℃	-40 – 55
Sound Level (indoor side)	dB(A)	65
IP Class		IP55
RoHS2 compliance		Yes
Energy Consumption -Input Power (kW)	W	850
Energy Consumption – Input Current (A)	A	3.80
Air Flow Volume	m3/h	650
Maximum Operation Current	A	6.5
Voltage Range	V, Hz	220±15%, 50/60
Nominal Voltage – Controller	V, Hz	220, 50
Nominal Voltage – Cooling/Heating System	V, Hz	220, 50

3.5.6.2 Liquid Cooling Unit(chiller)

	container user manual	Ver.	1.0
		Page.	46
		effective date	Sept.10th.2024

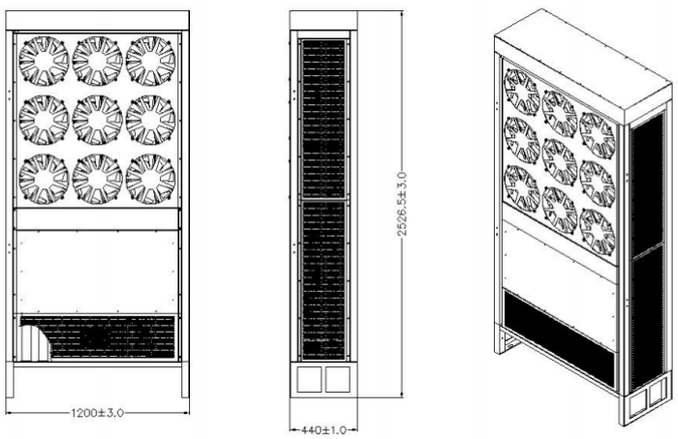

Specification:

Item	Description	Specification
1	Voltage(V)	380Vac±15%
2	Frequency (Hz)	50±2%
3	W18/L45/ cooling capacity(kW)	60
4	Heating volume(kW)	12
5	Rated cooling power(kW) W18/L45	28
6	Self-circulating power(kW)	3.6
7	Maximum operating current(A)	64
8	Rated liquid rate	500L/min@15m
9	Nosie(dB)	≤85
10	Coolant	50% ethylene glycol aqueous solution
11	Working temperature (℃)	-30 ~ +55
12	Storage humidity	5 ~ 95%
13	Working altitude	0 ~ 4000m , greater than 2000m, performance decreases by 3% for every 1000m increase in altitude
14	Liquid supply and recycle	Bottom supply and return liquid
15	Installation method	Floor mounted installation
16	Weight	390kg
17	Outlet size(W*D*H)	1200*440*2530mm

Consistent energy storage concept

	container user manual	Ver.	1.0
		Page.	47
		effective date	Sept.10th.2024

3.5.7 Fire Suppression System

The fire extinguishing system (including sensors, sprinklers, pipelines, etc.) is rack mounted and pre-integrated in the battery ESS container.

Key components of the fire suppression system are: Extinguishant releasing panel, Li-ion Tamer Rack Monitoring sensor and interface module, temperature sensor, smoke detector, Aerosol Fire Extinguisher, etc.

The fire suppression system's Auxiliary Control Panel is mounted at the right side of the battery ESS container.

The gas ventilation system (composed mainly of exhaust module) is located at left and right side of the ESS container.

The extinguishant is using Powdered Aerosol A (SFE),which features high insulation, environment friendly, and quick-fire extinguishing and cooling.

The fire protection system has two control modes: automatic and electrical manual.

Each protected area has set up two independent detection loops. It is mainly composed of a detection circuit, an Aerosol fire extinguishing system and a water fire extinguishing system.

The detection circuit is composed of Aerosol extinguishing controller, temperature sensing, smoke sensor, emergency stop button, alarm bell, etc.

The extinguishing agent delivered by the Aerosol extinguishing system is a powdered aerosol created in-situ by a chemical reaction taking place in a non-pressurized container, delivering dry powder small particles (1-5 microns) floating in inert gases.

The water fire extinguishing system is composed of fire hydrant interface, fire water pipeline and fire sprinklers.

■ Top View of Fire Extinguishing System

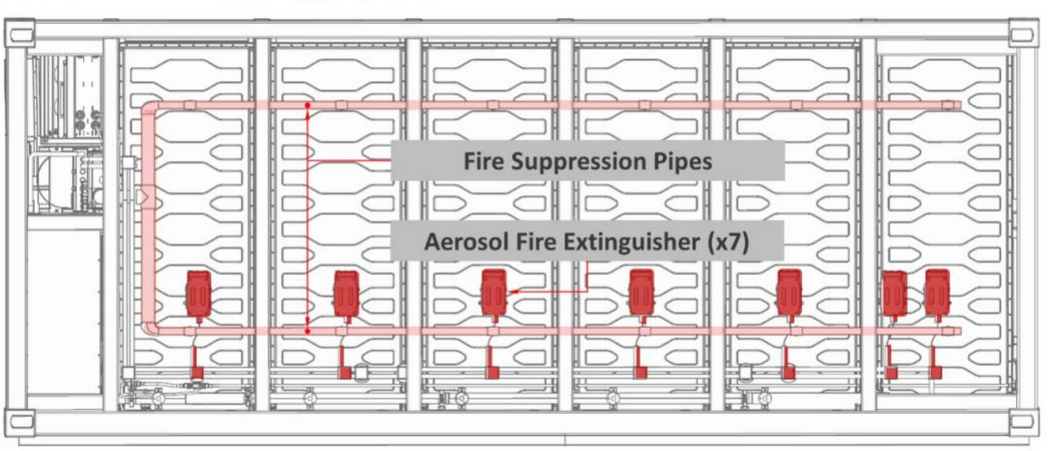

Top View of Aerosol Fire Extinguishers (x7) and Fire Suppression Pipes in the BESS Container

3.5.7.1 Fire Suppression System's Key Components

Key components are Extinguishant Control Panel, Extinguishant Abort Switch, Li-ion Tamer Interface

	container user manual	Ver.	1.0
		Page.	48
		effective date	Sept.10th.2024

module, Ventilation System Intelligent Control Module, Manual Non-Coded Pull Station, Horn Strobe, Emergency Stop Button, etc.

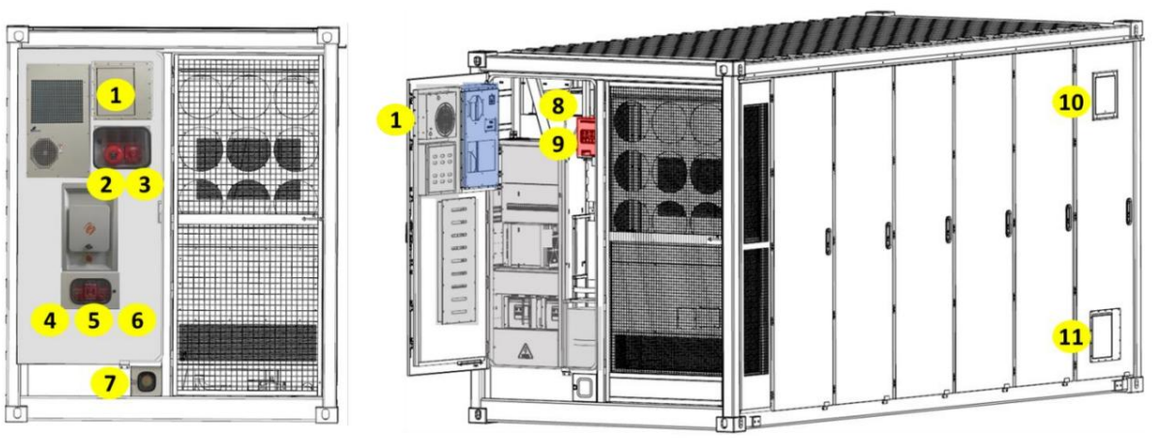

1	Exhaust Fan	5	Manual Non-coded Pull Station	9	Extinguishant Control Panel
2	Alarm Bell	6	Extinguishant Abort Switch	10	Pressure Relief Port
3	Horn Strobe	7	Open Snoot	11	Inlet Fan
4	Extinguishant Disablement Switch	8	Li-ion Tamer (on top of Extinguishant Control Panel)		

3.5.7.1.1 Extinguishant Control Panel

The Extinguishant Control Panel is used for fire alarms and automatic fire extinguishing control

	container user manual	Ver.	1.0
		Page.	49
		effective date	Sept.10th.2024



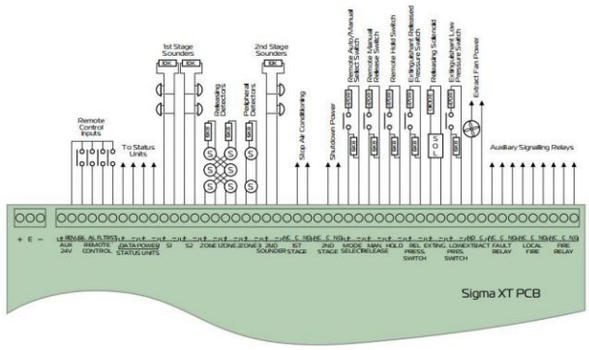

Item	Specification
Dimension (H x W x D)	385mm x 310mm x 90mm
Enclosure material	1.2mm mild sheet steel
Operating Voltage (V)	230V AC Battery: two 12V 7Ah sealed lead acid in series
Capacity	Number of initiating circuits: 3 Number of detectors per zone: ≤ 32
Operating temperature (℃)	-5℃ - +40℃±2℃
Humidity	≤ 95% (no condensing)
IP Rating	IP 30

3.5.7.1.2 Alarm Bell

The Alarm Bell provide loud resonant tones. It operates on 24VDC and is motor driven,



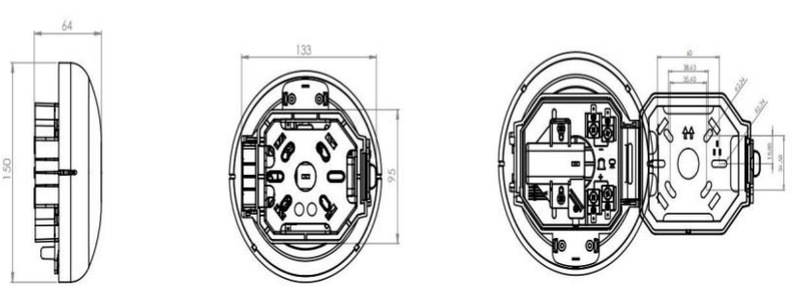

	container user manual	Ver.	1.0
		Page.	50
		effective date	Sept.10th.2024

Item	Specification
Dimension (L x W x D)	150mm x 64mm
Nominal Voltage	Regulated 24V DC/FWR (full wave rectified)
Operating Voltage Range	20.4-27.6V
Sound Output	96dBA
Standard Operating Temperature	-10℃-+50℃

3.5.7.1.3 Li-ion Tamer Rack Monitoring module and sensor

The Li-ion Tamer interface module is installed on the right side of the Battery ESS Container, on the top left area of the Fire Suppression System's Auxiliary Control Panel.

Description	Specification
Li-ion Tamer Interface Module 	Dimension: (W x L x D): 85mm x 140mm x 32.8mm Input Voltage: 24V (Range: 15 ~32V DC) Relay Output: Fault indication, Alarm Indication Hardware: CAN Bus,MODBus 485 Operating Temperature: –10°C to +60°C Ambient Humidity: 5 ~ 95% RH (non-condensing)

The monitoring sensors are installed at the battery racks. The sensors are acutely sensitive to lithium-ion battery off-gassing compounds, do not require calibration.

Description	Specification
Li-ion Tamer Sensor  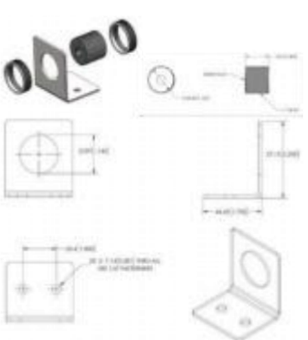	Dimension: Φ28.6 x 25.4mm Input Power: 3-16VDC Power Consumption: 250mW (@5VDC, 25℃) Target Gas: Battery electrolyte vapor components (such as diethyl carbonate, dimethyl carbonate, EMC, DEC, etc.), Volatile organic compounds, CO, H2 Min. probe threshold: <1ppm/sec Response time: 5 seconds Operating Temperature: -10 - +80℃ Ambient Humidity: 10 ~ 95% RH (non-condensing) Max. Temperature Change: 8.6℃/minute Target Application Lifetime: > 15 years

	container user manual	Ver.	1.0
		Page.	51
		effective date	Sept.10th.2024

The sensors provide early warning of lithium-ion battery failures, and provide highly reliable output signal.

3.5.7.1.4 Extinguishant Disablement and Abort Switch



The Abort switch connects to the Abort terminals of the releasing panel, which provide open and short circuit supervision.
The Abort switch can only be used after the secondary fire alarm is activated and will enter the deflation countdown. The deflation countdown is 30 seconds.
If the gas deflation needs to be stopped urgently, then press and hold the Fire Suppression System Abort button, the countdown will stop for 30 seconds. The countdown will continue when the button is released
.

3.5.7.1.5 Manual Automatic Switching With Emergency Start



The manual automatic transfer switch should be kept in automatic mode, that is, the fire protection system should operate automatically.
When personnel need to maintain the energy storage system, the manual/automatic transfer switch

should be switched to manual mode to prevent accidental action of the fire protection system and the release of fire extinguishing agents.
In case of emergency, personnel can manually release the fire extinguishing agent through the emergency start button.

3.5.7.2 Temperature Heat Detector




Name	Color	Status	Description
Temperature Heat Detector	Red	Steady on	The detector enters the alarm state.
		Blinking	The detector enters the monitoring state.

3.5.7.3 Smoke Detector

The smoke detector can detect the smoke concentration in the environment.


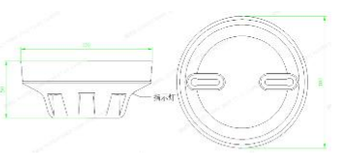

Name	Color	Status	Description
Smoke Detector	Red	Steady on	The detector enters the alarm state.
		Blinking	The detector enters the monitoring state.

Technical Specifications	Smoke Detector
Dimension	100mm (diameter) x 42mm (height)
Operating voltage	24 V (9–16 V DC)
Quiescent current	30 – 50μA
Alarm current	52 mA
Operating temperature	–20°C to +60°C
Ambient humidity	0% ~ 95% RH (non-condensing or icing)

	container user manual	Ver.	1.0
		Page.	53
		effective date	Sept.10th.2024

3.5.7.4 Aerosol Fire Extinguisher

The Aerosol Fire Extinguisher uses the GreenSol© A500 Fire Extinguisher, which is based on the environment friendly SFE Powdered Aerosol technology, listed on the USEPA Halon Alternatives SNAP list as Powdered Aerosol A.
The A500 model is designed to extinguish and provide extinguishment for Class A (solid fuel), B (liquid and gas fuel), and C (electrical) fires in defined enclosures.
It produces large amounts of powdered aerosol, designed to extinguish a fire in a 5.0m3 closed volume.
The system is compatible with standard detection and control systems and can be installed inside or outside the protected volume.

- Appearance of the Aerosol Fire Extinguisher



- Specification

Item	Description	Specification
1	Extinguishing Volume	5m3 (100 gr/m3)
2	Activation Mode	Electrical
3	Powdered Aerosol Color	White / light gray
4	Discharge Time	48 seconds
5	Temperature Range	-40℃ (-40℉) to 80℃ (176℉)
6	Toxicity	None
7	SFE Weight	500 gr / 17.64oz
8	SFE Combustion Velocity	1.1-1.2 mm/sec
9	Power Supply	1.2A
10	Ignition	Electrical match (1a – 1w) type
11	Electrical Resistance	0.85-1.85 Ohm (±0.2)

	container user manual	Ver.	1.0
		Page.	54
		effective date	Sept.10th.2024

12	Dimension (W x H x L) (mm)	120 x 120 x 245
13	Total Weight (kg)	11.6kg
14	Ozone Depletion Potential	None
15	Global Warming Potential	None

■ Location of the Aerosol Fire Extinguishers

There are seven (7) Aerosol Fire Extinguishers mounted on the container top roof, as showed in the top view picture below

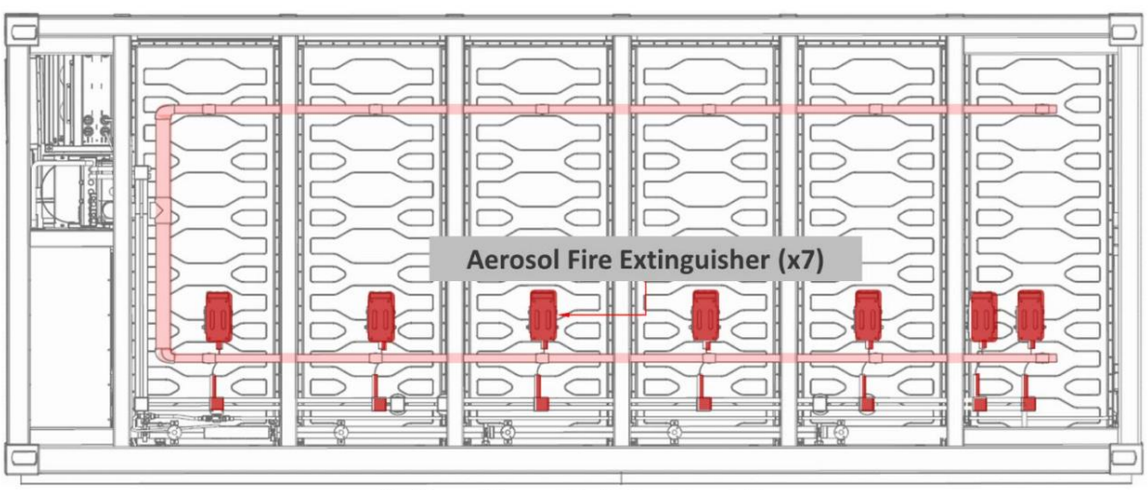

Top View of Aerosol Fire Extinguishers (x7)

3.5.7.5 Exhaust Module

The exhaust module is the actuator of the gas ventilation system. It is made of Exhaust Fan and Inlet Fan. The exhaust module (or automatic pressure relief module) is installed on the wall of the fire extinguishing protection area and is usually closed. it is an integral part of a gas fire extinguishing system.

■ Specifications for Exhaust/Inlet Fan

Item	Specification
Dimension (L x W x D)	Exhaust Fan: 400mm x 350mm x 110mm Inlet Fan: 400mm x 350mm x 52mm
Nominal Voltage	Exhaust Fan: 230V AC @ 50 Hz Inlet Fan: 24V DC
Nominal Power	Exhaust Fan: 120W Inlet Fan: 30W
Maximum Flow Rate (CFM Cubic Foot per Minute)	820 CFM
Operating Temperature	-20℃ - 55℃ 85%RH
Storage Temperature	-40℃ - 65℃, 95%RH

	container user manual	Ver.	1.0
		Page.	55
		effective date	Sept.10th.2024

IP Rating	IP55
Material	Galvanized steel
Corrosion Protection Level	C4, or C5

■ Dimensions for Exhaust/Inlet Fan

Exhaust Fan:

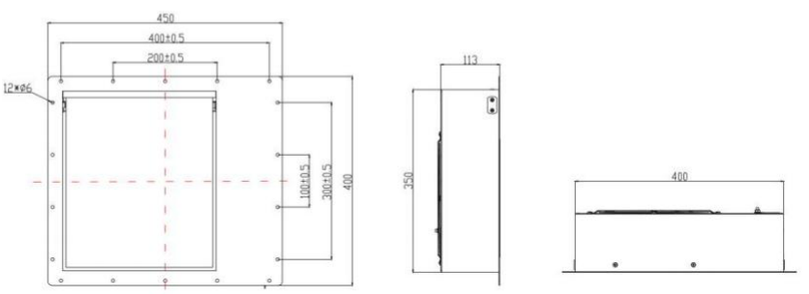

Inlet Fan:

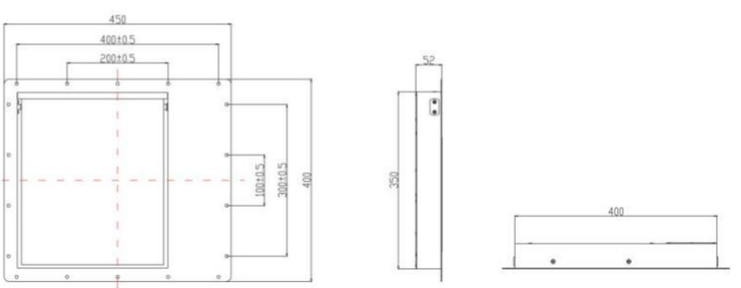

3.5.7.6 Automatic Pressure Relief Device

The automatic pressure relief device is an integral part of the gas fire extinguishing system. It is normally in a “CLOSE” state.

When the gas fire extinguishing system extinguishes the fire in the protection area, more pressure will be generated than allowed in the protection area, the automatic pressure relief device will release the overpressure, implement protection for the protection area. When the pressure is reduced, the pressure relief device will be closed, so that the airtightness of the protection area is ensured and the needs of fire extinguishing is achieved.

	container user manual	Ver.	1.0
		Page.	56
		effective date	Sept.10th.2024



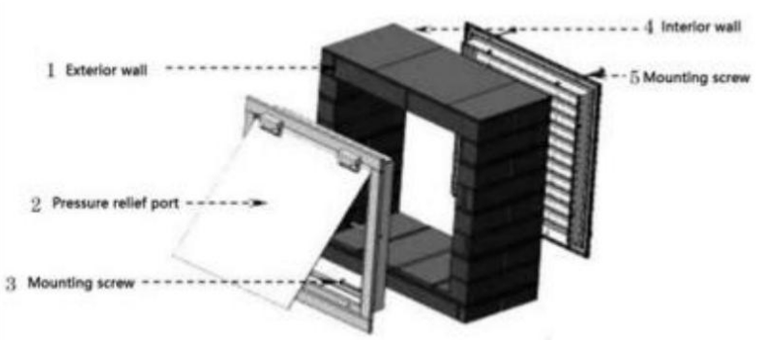

Item	Specification
Dimension (L x W x D) (mm)	375mm x 375mm x 80mm
Cut-out Size (L x W) (mm)	300mm x 300mm
Opening Pressure (PA)	1100±50
Pressure relief area (m2)	0-0.07

3.6 Battery ESS Working Principle

3.6.1 Main Circuit Diagram

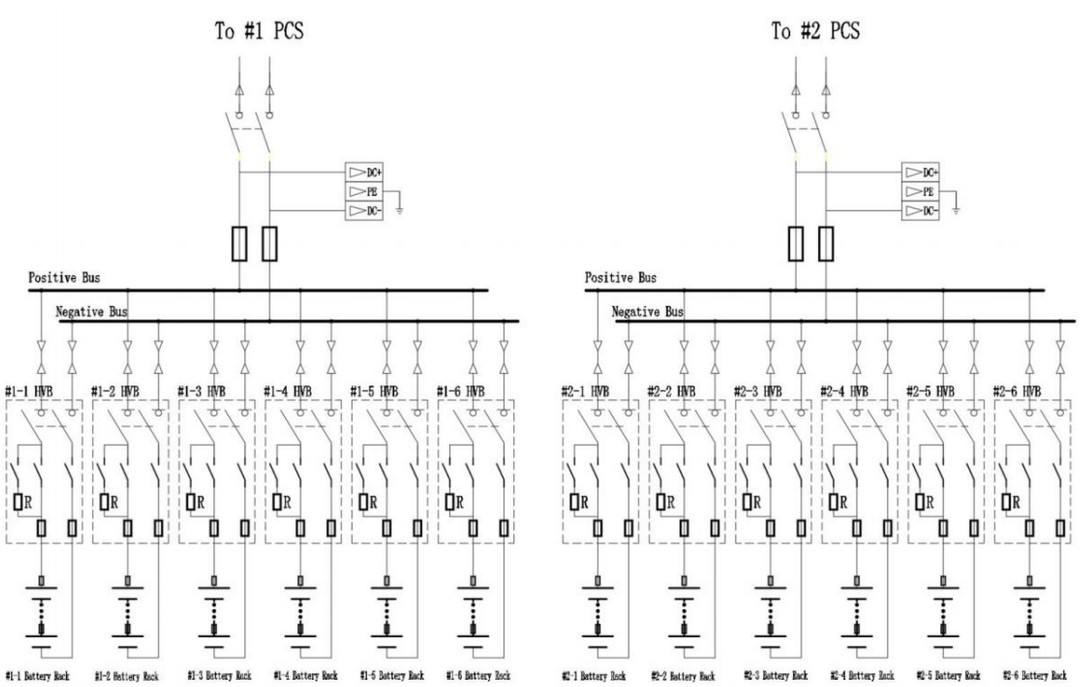

	container user manual	Ver.	1.0
		Page.	57
		effective date	Sept.10th.2024

Remark:

The above diagram shows the typical internal electrical layout of a 5MWh battery container when connected to the grid via a centralized inverter and transformer. In this project, string inverters are used, with each battery cluster connected to one 215kVA string inverter. Therefore, there is no DC bus circuit in the Master control box; it is equipped with auxiliary power distribution and a Cluster Battery Management Unit (CBMU), among other components.

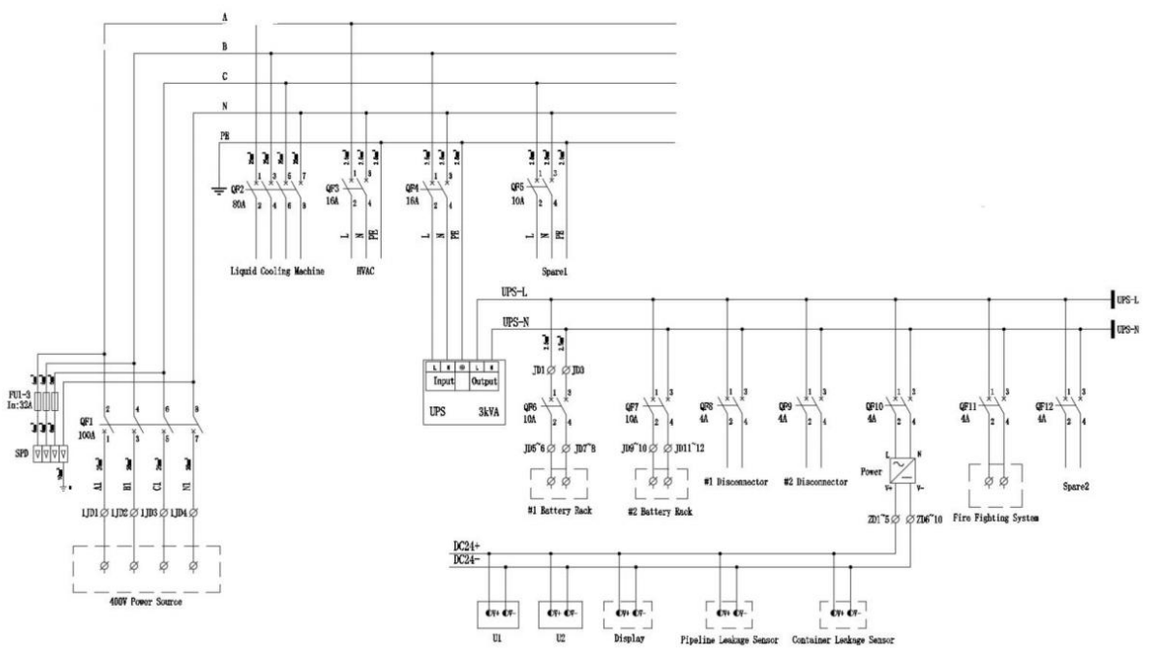

3.6.2 Working Modes

The Battery ESS has FOUR working modes: Charging, Discharging, Idle, and Fault.

	container user manual	Ver.	1.0
		Page.	58
		effective date	Sept.10th.2024

Working Mode	Description	Reference Figure
Charging	In this mode, the Battery ESS is charging the battery system and automatically stops when fully charged.	

	container user manual	Ver.	1.0
		Page.	59
		effective date	Sept.10th.2024

Discharging	In this mode, the Battery ESS is discharging to the load and stops when the discharge cut-off voltage is reached.	
Idle	In this mode, the Battery ESS is idle.	
Fault	In this mode, the Battery ESS is in a fault state, and the specific fault content can be viewed through the display screen.	

3.7 Typical Application Scenario

From the perspective of the entire power system, the application scenarios of energy storage can be divided into three scenarios: power generation side energy storage, transmission and distribution side energy storage, and user side energy storage.

These three scenarios can be divided into energy-based demand and power-based demand. Energy-based demands generally require a long discharge time (e.g., energy time shift) and do not require a high response time.

	container user manual	Ver.	1.0
		Page.	60
		effective date	Sept.10th.2024

In contrast, power-based demands generally require fast response capability, but generally the discharge time is not long (e.g., system frequency modulation).

In practical applications, energy storage technologies need to be analyzed according to the needs of various scenarios to find the most suitable energy storage technology

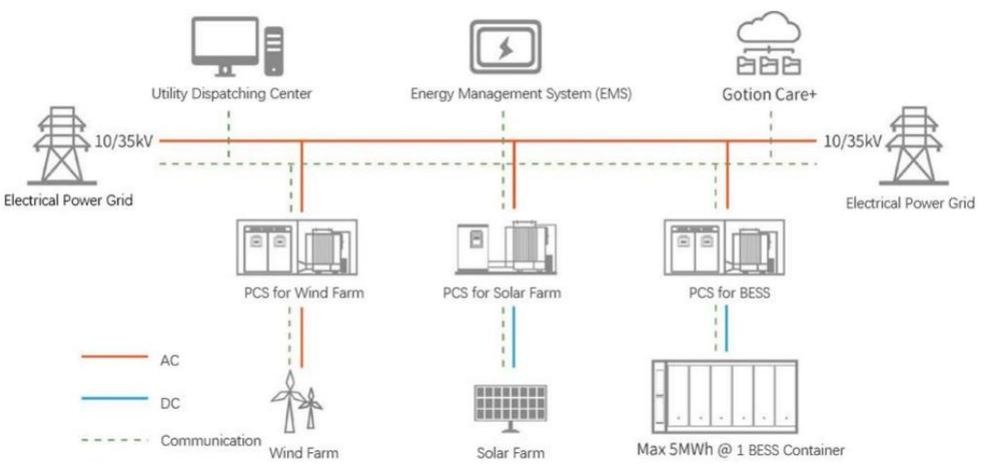

4. Transportation Requirement

DANGER

Load or unload batteries with caution. Otherwise, the batteries may be short - circuited or damaged (such as leakage and crack), catch fire, or explode.

WARNING

Do not move a battery by holding its terminals, bolts, or cables. Otherwise, the battery may be damaged.

Keep batteries in the correct direction during transportation. They must not be placed upside down or tilted, and must be protected against falling down, mechanical impact, rains, snows, and falling into water during transportation.
Batteries must be transported separately. Do not transport a Container with batteries installed. If the Container needs to be transported or moved, remove the batteries first.

- Batteries have obtained the certifications of the UN38.3 and UN3536. The batteries belong to Class 9 dangerous goods.
- The transportation service provider must be qualified to transport dangerous goods. Open truck transportation is not allowed.
- Batteries are delivered to the site directly and the road or sea transportation requirements shall be met.

	container user manual	Ver.	1.0
		Page.	61
		effective date	Sept.10th.2024

● Comply with the international regulations on the transport of dangerous goods and meet the requirements of the transportation regulatory authorities in the countries of departure, route, and destination.

● Choose sea or roads in good conditions for transportation. Do not transport the equipment by railway or air. Avoid tilt or jolt during transportation.

● Maritime transport must comply with the International Maritime Dangerous Goods Code (IMDG Code).

● Road transport must comply with the Agreement Concerning the International Carriage of Dangerous Goods by Road(ADR) or JT/T 617.

● Before transportation, check that the battery package is intact and that there is no abnormal odor, leakage, smoke, or sign of burning. Otherwise, the batteries must not be transported.

●The packing case must be secured for transportation. Handle the case with care during loading and unloading, and take moisture-proof measures during transportation.

● Vehicles for road transport should meet the load bearing capacity requirement.

● The speed limit for road transport is 80km/h on flat roads and 60km/h on rough roads. In the case of any conflict, comply with local traffic laws and regulations.

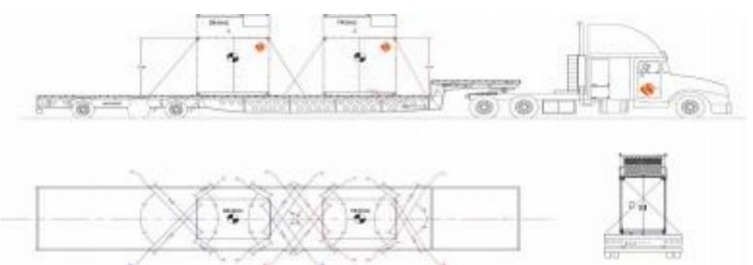

● Exercise caution when moving batteries to prevent bumping and ensure personal safety.

● Unless otherwise specified, dangerous goods must not be mixed with goods containing food, medicine, animal feed, or their additives in the same vehicle or container.

● Unless otherwise specified, when dangerous goods packages are loaded in the same vehicle or container as ordinary goods, they shall be separated in either of the following ways:

– Use a spacer that is as high as the packages.

– Keep a distance of at least 0.8 m around.

● Before transporting a faulty battery (with scorch, leakage, bulge, or water intrusion), insulate its positive and negative terminals, pack it, and place it in an insulated explosion-proof box as soon as possible. Record information such as the site name, address, time, and fault symptom on the box.

● When transporting faulty batteries, avoid approaching flammable material storage areas, residential areas, or other densely populated places, such as mass transit facilities or elevators.

● Be cautious to prevent injury when moving heavy objects

	container user manual	Ver.	1.0
		Page.	62
		effective date	Sept.10th.2024

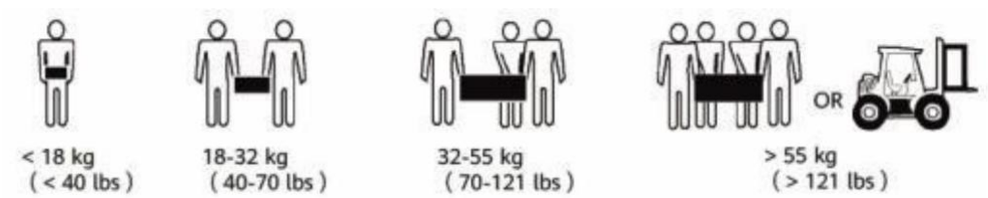

● If multiple persons need to move a heavy object together, determine the manpower and work division with consideration of height and other conditions to ensure that the weight is equally distributed.
● If two persons or more move a heavy object together, ensure that the object is lifted and landed simultaneously and moved at a uniform pace under the supervision of one person.
● Wear personal protective gears such as protective gloves and shoes when manually moving the equipment.
● To move an object by hand, approach to the object, squat down, and then lift the object gently and stably by the force of the legs instead of your back. Do not lift it suddenly or turn your body around.
● Move or lift the equipment by holding its handles or lower edges. Do not hold the handles of modules that are installed in the equipment.
● Do not quickly lift a heavy object above your waist. Place the object on a workbench that is half-waist high or any other appropriate place, adjust the positions of your palms, and then lift it.
● Move a heavy object stably with balanced force at an even and low speed. Put down the object stably and slowly to prevent any collision or drop from scratching the surface of the equipment or damaging the components and cables.
● When moving a heavy object, be aware of the workbench, slope, staircase, and slippery places. When moving a heavy object through a door, ensure that the door is wide enough to move the object and avoid bumping or injury.
● When transferring a heavy object, move your feet instead of turning your waist around. When lifting and transferring a heavy object, ensure that your feet point to the target direction of movement.

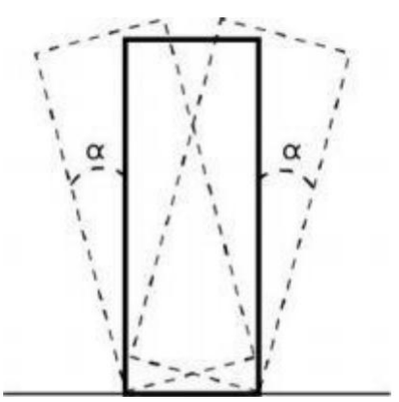

Consistent energy storage concept

● When transporting the equipment using a forklift truck, ensure that the forks are properly positioned so that the equipment does not topple. Before moving the equipment, secure it to the forklift truck using ropes. When moving the equipment, assign dedicated personnel to take care of it.
● Move the equipment with caution to prevent collision or fall

5. Storage Requirement

General Requirements

NOTE

● Proof that the product is stored according to the requirements must be available, such as temperature and humidity log data, storage environment photos, and inspection reports.
● Do not store battery packs for extended periods. Long-term storage of lithium batteries may cause capacity loss. Generally, the irreversible capacity loss is 3% to 5% after the lithium batteries are stored at the recommended storage temperature range for 12 months.
● The storage environment must be clean and dry. The product must be protected against rain and water.
● The air must not contain corrosive or flammable gases.
● Do not tilt the product or place it upside down. If equipment except battery packs has been stored for more than two years, it must be checked and tested by professionals before use.

5.1 ESS (Excluding Battery Packs) Storage

● Do not unpack an ESS if it will be stored for a long time.
● Do not stack the ESSs.
● Ensure that the ground surface is flat (for long-term or temporary storage).
● Close the Container door.
● Storage temperature: –30°C to +60°C (without UPS); relative humidity: 5%–95% RH.

5.2 Battery Pack Storage and Single Battery Pack Charge

Material Delivery Check

WARNING

● Ensure that batteries are stored in a dry, clean, and ventilated indoor environment that is free from sources of strong infrared or other radiations, organic solvents, corrosive gases, and conductive metal dust. Do not expose batteries to direct sunlight or rain and keep them far away from sources of heat and ignition.
● If a battery is faulty (with scorch, leakage, bulge, or water intrusion), move it to a dangerous goods warehouse for separate storage. The distance between the battery and any combustible materials must be at least 3 m. The battery must be scrapped as soon as possible.

	container user manual	Ver.	1.0
		Page.	64
		effective date	Sept.10th.2024

● Place batteries correctly according to the signs on the packing case during storage. Do not place batteries upside down, lay them on one side, or tilt them. Stack batteries in accordance with the stacking requirements on the packing cases.
● Store batteries in a separate place. Do not store batteries together with other devices. Do not stack batteries too high. The site must be equipped with qualified fire fighting facilities, such as fire sand and fire extinguishers.
● After batteries are powered off, static power consumption and self-discharge loss may occur in internal modules, which may cause battery damage due to overdischarge. Do not store batteries in low SOC and charge batteries in a timely manner. Permanent battery faults caused by delayed charge are not covered by the warranty. Storing the batteries in low SOC occurs in scenarios including but not limited to the following:
● The power cables or signal cables are not connected.
● The batteries cannot be charged due to a system fault after discharge.
● The batteries cannot be charged due to incorrect configurations in the system.
● The batteries cannot be charged due to long-term mains failure.

⚠ CAUTION

It is recommended that batteries be used soon after being deployed onsite. Batteries that have been stored for an extended period shall be charged periodically (SOC for storage is recommended to be 30%-50%, periodically charge is every 3 months if batteries are not in use). Otherwise, they may be damaged.
Packaging label description

Label	Description
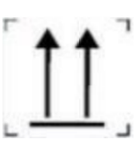	**This way up**: The package shall be vertically oriented during transport and storage.
	**Fragile**: The package contains fragile objects and shall be handled with care.
	**Keep dry**: The package shall be kept away from rain.
	**Stacking limit by number**: The packages shall not be vertically stacked beyond the specified number. The actual label may vary.

Consistent energy storage concept

	container user manual	Ver.	1.0
		Page.	65
		effective date	Sept.10th.2024

● The storage environment requirements are as follows:
– Ambient temperature: –30°C to +60°C (0°C to 30°C are recommended. If batteries are stored at a temperature higher than 40°C for extended periods, the battery performance and service life may be deteriorated.)
– Relative humidity: 5%–95% RH (recommended: about 45% RH)
– Dry, clean, and well-ventilated
– Away from corrosive organic solvents and gases
– Away from direct sunlight
– At least 2 m away from heat sources
● The batteries in storage must be disconnected from external devices. The indicators (if any) on the batteries must be off.
● When stored in low SOC, the batteries must be charged within the maximum interval corresponding to the SOC when the batteries are powered off. If the batteries are not charged within the specified interval, they may be damaged due to overdischarge.
● Only trained and qualified personnel are allowed to charge batteries. Wear insulated gloves and use dedicated insulated tools during the operation.
● Observe onsite during charge and handle any exceptions in a timely manner.
● If a battery experiences an abnormality such as bulging or smoking during charge,

stop charging immediately and dispose of it.

⚠ CAUTION

● AC mains input voltage requirements for charging:
– 220 V (three-phase 260–530 V AC or single-phase 176–300 V AC)
– 110 V (three-phase 130–265 V AC or single-phase 90–175 V AC)
– AC input power cables used for charging in the warehouse must have a through-current capacity greater than 63 A.
● If batteries have been stored for longer than allowed, promptly report the event to the person in charge.
● Ensure that batteries are delivered based on the "first in, first out" rule.
● Handle batteries with caution to avoid damage.

Conditions for Determining Overdue Storage of Battery Packs

● Do not store batteries for extended periods.
● If batteries have been stored for longer than allowed, promptly report the event to the person in charge.
● Dispose of deformed, damaged, or leaking batteries directly irrespective of how long they have been stored.

Preparing Charging Devices

- Multimeter
- Clamp meter
- Insulated torque socket wrench
- Charger

Inspection Before Charge

1). Before charging a battery, you need to check its appearance. Charge the qualified battery or dispose of the unqualified one.

2). The battery is qualified if it is free from the following symptoms:

– Deformation

– Shell damage

– Leakage

3). Check that the accessories are complete based on the packing list delivered with the charger.

Full Charge Strategy

The charging ambient temperature ranges from 15°C to 40°C (25℃±2℃ is recommended)

Charge and Discharge Current (Unit: Ampere)	Charging Duration (Excluding Equalization)
12.5[1]	24 hours (fully discharge the battery and then charge the battery to 50% SOC)
25[1]	12 hours (fully discharge the battery and then charge the battery to 50% SOC)

Note:

[1]:

These are suggested time, it can vary based on the actual need. Maximum Charge/Discharge Current should not exceed 150Ampere

	container user manual	Ver.	1.0
		Page.	67
		effective date	Sept.10th.2024

6. Installation

6.1 Site Requirements

6.1.1 Site Selection

NOTICE

Refer to the *NFPA855StandardfortheInstalationofStationary Energy Storage Systems* and local laws and regulations

● The horizontal level of the installation site shall be above the highest water level of that area in history and at least 300 mm above the ground. The site must not be located in a low-lying land.

● For safety purposes, the distance between the ESS and densely populated areas, high-rise buildings, a s well as flammable/explosive facilities outside the plant area must exceed the minimum threshold of 30 m. If the distance does not meet the requirement, fire walls shall be installed between the ESS and the b uildings.

● The ESS and the site must be in an environment free from explosion risks.

● Transportation to the site shall be convenient and fire suppression facilities shall be available and reliable.

NOTE

● When installing, commissioning, and operating the ESS, ensure that at least two gas fire extinguishers are provided near each unit to ensure fire safety.
● Reserve sockets for the water fire suppression system at the ESS site.

● The site area must meet the requirements and there shall be space for capacity expansion.
● The ESS shall be installed more than 30 m away from the third-party wireless communication facilities.
● The site s hall be in a well-ventilated place.

Do not select the sites that are not recommended by industry standards and regulations, including but not limited to the following areas:

●Areas with sources of strong vibration, loud noises, and strong electromagnetic interference
●Areas with dust, oil fumes, harmful gases, corrosive gases, etc.
●Areas with corrosive, flammable, and explosive materials
● Areas with existing underground facilities

	container user manual	Ver.	1.0
		Page.	68
		effective date	Sept.10th.2024

●Areas with adverse geological conditions such as rubbery soil and soft soil layer, or prone to water logging and land subsidence
●Under a reservoir, water landscape, and water room.

NOTE

- If areas prone to waterlogging cannot be avoided, install water blocking and drainage facilities or raise the ground.
- Cable trenches shall not be used for drainage.
- Fire retardant sealing shall be implemented at cable holes (such as holes through partition walls and floors).

- Areas prone to earthquakes and with seismic fortification intensity higher than 9
- Areas prone to debris flow, landslide, quicksand, karst caves, and other direct hazards
- Areas within the mining land subsidence (dislocation) zone
- Areas within the scope of blasting hazard
- Areas prone to flood due to a dam or levee failure
- Protection areas for important water supply sources
- Protection areas for historic relics
- Populated areas, high-rise buildings, and underground buildings
- Intersections and busy roads of urban main roads Requirements for flood and waterlogging prevention in site selection:
- The site design elevation of a large-scale electrochemical energy storage system (power ⩾ 100 MW) shall be higher than the flood level with a probability of 1% or the historical highest waterlogging level.
- The site design elevation of a medium - or small-scale electrochemical energy storage system (power < 100 MW) shall be higher than the flood level with a probability of 2% or the historical highest waterlogging level.
- If the site design elevation cannot meet the preceding requirements, change the site location or take different flood and waterlogging prevention measures based on the site requirements.
- For energy storage plants prone to wind and waves from rivers, lakes, and seas, the elevation of flood prevention facilities shall consider the wind and wave height with a probability of 2%. and an additional safety height of 0.5 m.
- When a large amount of catchment water flows into or passes through the site, it is recommended that side ditches or drainage ditches be built to drain water from the ground in an organized manner.

The Battery ESS is heavy as a complete system, and before building the foundation for the Battery ESS, the conditions of the installation site (mainly referring to the site location conditions and environmental and climatic conditions, etc.) should be investigated in detail. Only on this basis can the design and construction of the foundation begin.

In order to ensure the maintenance of the battery pack and other equipment in the Battery ESS, the

side road of the container needs to be hardened with cement or asphalt.

6.1.1.1 Outdoor Site Requirements

The general requirements for selecting an outdoor ESS site are as follows:

● There must be no vegetation, especially flammable plants within 3 m of the ESS or the site to protect the ESS from possible fires. (Exemption: Single specimens of trees, shrubbery, or cultivated ground cover such as green grass, ivy, succulents, or similar plants used as ground covers shall be permitted to be exempt provided that they do not form a means of readily transmitting fire.)

● No obstacle shall be above the ESS. For example, the ESS must not be installed under a parking shed and PV modules must not be installed on the top of the ESS.

●The safety distances between the ESS and production buildings must comply with local fire protection regulations or standards.

- The ESS located outdoors must be at least 10 ft (3.048 m) away from lot lines, public ways, buildings, combustible materials, hazardous materials, high-piled stock, parking spaces, and other exposure hazards not associated with electrical grid infrastructure.
- If either of the following conditions is met, the distance between the ESS and the production building shall be permitted to be reduced to 3 ft (0.914 m). In addition, clearance requirements for equipment transportation, installation, and maintenance shall be considered.

● There are 1-hour freestanding fire walls, extending 5 ft (1.5 m) above and extending 5 ft (1.5 m) beyond the physical boundary of the ESS installation.

● Non-combustible exterior walls with no openings or combustible overhangs are provided on the walls adjacent to the ESS and the fire resistance rating of the exterior walls complies with 2-hour fire resistance rating of ASTM E119 or UL 263.

● The distance between the exhaust device of an ESS and the heating and ventilation vents, air intake vents of air conditioners, windows, doors, unloading platforms, and fire sources of otherbuildings or facilities must be greater than 4.6 m.

● The air inlet and outlet of the battery compartment are shown in the figure. When arranging the equipment, the direction of the air inlet and outlet of the battery

When a large amount of catchment water flows into or passes through the site, it is recommended that side ditches or drainage ditches be built to drain water from the ground in an organized manner.

The Battery ESS is heavy as a complete system, and before building the foundation for the Battery ESS, the conditions of the installation site (mainly referring to the site location conditions and environmental and climatic conditions, etc.) should be investigated in detail. Only on this basis can the design and construction of the foundation begin.

In order to ensure the maintenance of the battery pack and other equipment in the Battery ESS, the side road of the container needs to be hardened with cement or asphalt.

6.1.1.2 Outdoor Site Requirements

Consistent energy storage concept

	container user manual	Ver.	1.0
		Page.	70
		effective date	Sept.10th.2024

The general requirements for selecting an outdoor ESS site are as follows:

● There must be no vegetation, especially flammable plants within 3 m of the ESS or the site to protect the ESS from possible fires. (Exemption: Single specimens of trees, shrubbery, or cultivated ground cover such as green grass, ivy, succulents, or similar plants used as ground covers shall be permitted to be exempt provided that they do not form a means of readily transmitting fire.)

● No obstacle shall be above the ESS. For example, the ESS must not be installed under a parking shed and PV modules must not be installed on the top of the ESS.

●The safety distances between the ESS and production buildings must comply with local fire protection regulations or standards.

- The ESS located outdoors must be at least 10 ft (3.048 m) away from lot lines, public ways, buildings, combustible materials, hazardous materials, high-piled stock, parking spaces, and other exposure hazards not associated with electrical grid infrastructure.
- If either of the following conditions is met, the distance between the ESS and the production building shall be permitted to be reduced to 3 ft (0.914 m). In addition, clearance requirements for equipment transportation, installation, and maintenance shall be considered.

●There are 1-hour freestanding fire walls, extending 5 ft (1.5 m) above and extending 5 ft (1.5 m) beyond the physical boundary of the ESS installation.

●Non-combustible exterior walls with no openings or combustible overhangs are provided on the walls adjacent to the ESS and the fire resistance rating of the exterior walls complies with 2-hour fire resistance rating of ASTM E119 or UL 263.

●The distance between the exhaust device of an ESS and the heating and ventilation vents, air intake vents of air conditioners, windows, doors, unloading platforms, and fire sources of other buildings or facilities must be greater than 4.6 m.

●The air inlet and outlet of the battery compartment are shown in the figure. When arranging the equipment, the direction of the air inlet and outlet of the battery.

compartment should be considered, and the air outlet of the battery compartment shall not affect the heat dissipation of other equipment.

	container user manual	Ver.	1.0
		Page.	71
		effective date	Sept.10th.2024

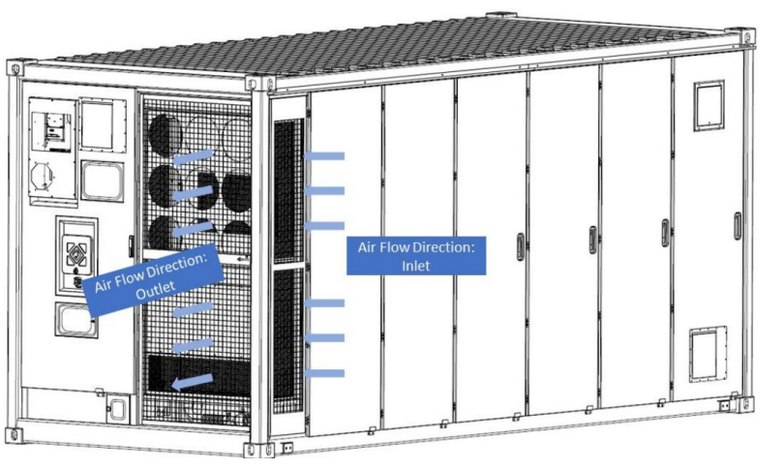

● The ESS cannot be installed in salt-affected or polluted areas because this will cause corrosion. The ESS can be used in the following or better environments:

– Outdoor environment more than 2000 m away from the coast. You are advised not to use the ESS in an area 500 m to 2000 m away from the coast. (If you need to use it, confirm with the vendor or the Company's engineers.) If the site is less than 500 m away From the coast, outdoor deployment is not allowed. Install the ESS indoors according to 6.1.1.3 Indoor Requirements.

– More than 1500–3000 m away from heavy pollution sources such as smelteries, coal mines, and thermal power plants

– More than 1000–2000 m away from medium pollution sources such as chemical, rubber, and electroplating industries

– More than 500–1000 m away from light pollution sources such as packing houses, tanneries, boiler rooms, slaughterhouses, landfill sites, and sewage treatment plant.

6.1.1.3 Indoor Building Requirements

The fire safety of the ESS dedicated-use buildings or structures must comply with local laws and regulations. Refer to standards including but not limited to NFPA 855 and comply with the following requirements:

● An ESS dedicated-use building or structure is required, with a 2-hour fire resistance rating for the walls and a maximum of 600 kWh lithium batteries stored per fire protection unit. The building or structure shall meet relevant requirements.

– The building or structure shall only be used for the operation of the ESS equipment.

– Occupants in the rooms and areas containing the ESS shall be limited to professional personnel that operate, maintain, service, test, and repair the ESS and other energy systems.

– No other occupancy types shall be permitted in the building or structure.

	container user manual	Ver.	1.0
		Page.	72
		effective date	Sept.10th.2024

● The distance between the ESS dedicated-use building or structure and the following places shall be greater than or equal to 3.0 m: lot lines, stored combustible materials, hazardous materials, high-piled stock, electrical infrastructure, public ways, buildings, and parking spaces.
● The layout in the ESS dedicated-use building or structure shall comply with local fire protection laws, regulations, and standards, such as the safe distance and layout of buildings and materials in various production scenarios.
● Combustible materials shall not be stored in the ESS dedicated-use building or structure. The distance between the combustible materials and the building or structure shall be greater than or equal to 3 m.
● The ESS dedicated-use building or structure shall be equipped with fire extinguishers filled with halogenatedane, FM-200, FM-5-1-12, carbon dioxide, or dry powder. Each fire protection unit shall be equipped with at least two fire extinguishers, which shall be checked and replaced periodically.
● The ESS dedicated-use building or structure shall be configured with room- level smoke detectors. At least two detectors of each type shall be configured, and the automatic fire alarm system s hall be enabled.
● The ESS dedicated-use building or structure shall be equipped with independent ventilation devices. The ventilation devices shall interact with the fire alarm system and limit the concentration of flammable gas to below 25% of the lower flammability limit (LFL). The mechanical exhaust ventilation rate shall be greater than or equal to 1 ft3/min/ft2 (5.1 L/sec/m2).
● The ESS dedicated-use building or structure shall be equipped with room-level flammable gas detection devices. Rooms containing the ESS shall be protected by an approved continuous gas detection system that complies with the following:

– The gas detection system shall be designed to activate the mechanical exhaust ventilation system when the level of flammable gas detected in the rooms exceeds 25% of the LFL.
– The mechanical exhaust ventilation system shall remain on until the flammable gas detected is less than 25% of the LFL.
– The gas detection system shall be provided with a minimum of 2 hours of standby power.
– Failure of the gas detection system shall annunciate a trouble signal at the monitoring center.

● The ESS dedicated-use building or structure shall be equipped with fire suppression facilities such as water spray or sprinkler systems. The water source available shall be able to supply for more than 2 hours at the designed water flow rate and the surrounding water source shall be able to supply water continuously for 12 hours to cope with the risk of reignition or fire spreading after a battery fire is extinguished. The water spray or sprinkler systems shall be designed using a minimum density of 0.3 gpm/ft2 (12.2 mm/min) based over the area of the room or 2500 ft2 (230 m2) design area, whichever is smaller.
● The ESS dedicated-use building or structure shall be equipped with pressure relief explosion-proof devices or pressure relief channels (such as glass windows and magnetic lock doors) with equivalent areas. According to the NFPA 68 standard, if side pressure relief is adopted, a protective fence or wall shall be installed outside the pressure relief channels, and the fence or wall shall be at least 3 m away from the pressure relief wall.

● The ambient temperature inside the building where the ESS is located shall be lower than 55°C when the ESS is running.

● The indoor ceiling height of the building or structure shall be at least 4.5 m. A minimum of 2 m clearance above the ESS shall be reserved for pressure relief and no flammable materials shall be placed above the ESS.

● Maintenance clearances:

– The entrance and exit doors shall meet the clearance requirements for installing the ESS using a forklift.

– The indoor area of the building shall meet the clearance requirements for the ESS maintenance and forklift operations.

● Exits and aisles:

– Safety exits and aisles shall be set for all areas containing the ESS in accordance with the local building code.

– Emergency lighting shall be provided for all exit doors and aisles in accordance with the local building code.

– All exit doors shall be opened toward the exit direction.

● Exemption conditions:

– The preceding installation requirements shall be in line with the requirements approved by the local fire department. On the premise that the fire department approval is obtained, the requirements on water sprinkler systems, smoke detection, flammable gas detection, and explosion-proof can be exempt. However, the requirements on mechanical exhaust ventilation, pressure relief clearance above the ESS, heat dissipation, and maintenance clearance shall be met.

– When approved by the fire department, the fire control and suppression systems, size and separation requirements, and the water supply shall be permitted to be omitted in ESS dedicated-use buildings located more than 100 ft (30.5 m) from buildings, lot lines that can be built upon, public ways, stored combustible materials, hazardous materials, high- piled stock, and other exposure hazards not associated with electrical grid infrastructure.

● Requirements for offshore indoor applications:

– If the ESS is less than 500 m away from the coast, ensure that it is located in an indoor environment within a dedicated protective building that has controllable temperature and humidity using air conditioners. The indoor environment must meet the C4 or higher level specified in ISO 12944/ISO 9223. In addition, the preceding site selection requirements for indoor applications must be met.

–Anti-salt fog measures must be taken for outdoor air conditioners and mechanical ventilation devices. Anti-salt fog filters must be installed at the air intake and exhaust vents, or anti-salt fog air conditioners or ventilation devices must be used. The filters must be maintained and replaced periodically.

6.2 Unpacking and Acceptance

● To prevent the equipment from falling over, secure it to a pallet truck or forklift using ropes before moving it. Move the equipment with caution to avoid bumping or falling, which may damage the equipment.

● After placing the equipment in the installation position, unpack it with care to prevent scratches. Keep the equipment stable during unpacking.
● If the installation environment is poor, take dustproof and anti-condensation measures (for example, use a dust cover, plastic film, or fabric cloth) after unpacking batteries to prevent condensation and dust buildup, which may corrode the batteries.
● Before unpacking batteries, check whether the packaging is intact. Do not use batteries with damaged packaging. If any damage is found, notify the carrier and manufacturer immediately.
● After unpacking:
- Check that the deliverables are complete against the enclosed packing list.
- Check that the actual Container received is the same as the model ordered.
- Inspect the BESS and internal equipment to ensure that there is no damage.
- Check whether the fastening components and removable components are loose. If they are loose, notify the carrier and manufacturer immediately.

6.3 Installation Preparations

⚠ WARNING

● Ensure that the power circuit breaker is **OFF** before installing batteries.
● When installing batteries, do not place installation tools, metal parts, or sundries on the batteries.
● After the installation is complete, clean up the objects on the batteries and the surrounding area.
● When moving batteries, do not remove protective components such as protective covers or waterproof caps from battery terminals.
● Do not move or operate under the forklift tynes.
● You can operate the battery pack installation kit only after the forklift stops moving

6.3.1 Preparing Tools

NOTE

● The tool pictures are for reference only.
● The tool tables may not list out some tools required onsite. Onsite installation personnel and the customer need to prepare the tools based on the site requirements.

	container user manual	Ver.	1.0
		Page.	75
		effective date	Sept.10th.2024

■ Installation Tools

 Phillips insulated torque screwdriver	 Insulated torque socket wrench (including an extension bar) • Socket specifications: 7–19 mm • Socket depth ⩾ 32 mm • The socket connector matches the torque wrench. • Torque range: 1.2–45 N·m	 Flat-head insulated torque screwdriver	 Diagonal pliers

Consistent energy storage concept

	container user manual	Ver.	1.0
		Page.	76
		effective date	Sept.10th.2024

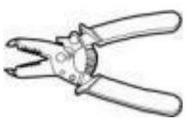 Wire stripper	 Cable cutter	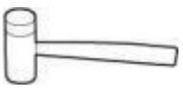 Rubber mallet	 Utility knife
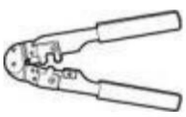 RJ45 crimping tool	 Hydraulic pliers	 Multimeter DC voltage measurement range ⩾ 1500 V DC	 Marker
 Steel measuring tape	 Level	 Vacuum cleaner	 Hammer drill
Hammer drill bit Φ16 mm	 Heat shrink tubing	 Heat gun	 Cable tie

	container user manual	Ver.	1.0
		Page.	77
		effective date	Sept.10th.2024

6.3.2 Personal Protective Equipment (PPE)

 Insulated ladder	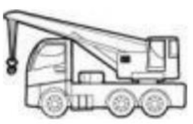 Crane	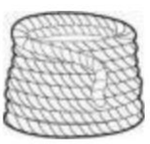 Lifting rope Rope length ⩾ 1845 mm x 4	 Electric forklift
 Pallet truck	-	-	-

 Insulated gloves	 Protective gloves	 Goggles	 Dust mask
 Insulated shoes	 Reflective vest	 Safety helmet	 Safety harness

6.4 Installing the ESS

Consistent energy storage concept

6.4.1 Installation Environment Check

Check the site requirements one by one, and start installation only after all requirements are met.
The company will not be liable for any consequences in the case that the installation environment does not meet the requirements.

NOTE

Mark the safe zone: use red caution belts to delimit a safe zone, clean up obstacles in the safe zone, and place construction signs and warning signs in the prominent positions.

6.4.2 Determining the installation Position of the ESS

■ Prerequisites:

The site requirements are met.
Check and adjust the height of the concrete platforms to ensure the height difference between the upper surfaces of all platforms does not exceed 5mm.
Notice: ensure that the concrete platforms meet requirements.
Determine the installation position and orientation of the ESS based on site conditions.

■ Procedure:

Step 1: determine the reference points for installing the ESS on the concrete platforms. Mark the reference points using a marker.
Step 2: On the basis of the reference pints, mark the mounting positions for the four corner fittings of the ESS using an ink fountain and a long soft measure tape.
Note: When marking the positions for the corner fittings, ensure that the four lines form a rectangle.
---END

6.4.3 Foundation Requirements

	container user manual	Ver.	1.0
		Page.	79
		effective date	Sept.10th.2024

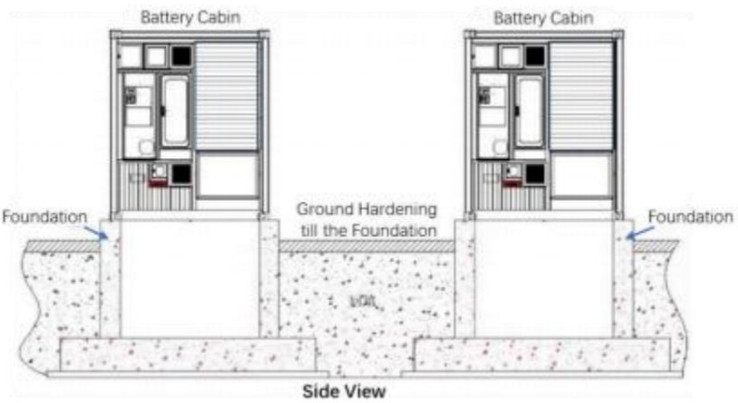

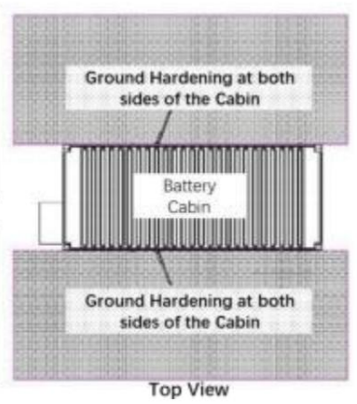

Requirements for foundation design solution:

● The ESS must be installed on concrete or other non-combustible surfaces. Ensure that the installation surface is horizontal, secure, flat, and has sufficient load-bearing capacity. Subsidence or slope is not allowed.

● The foundation shall sustain the total weight of the equipment. If the load- bearing capacity of the foundation does not meet the requirement, a review is required.

● The bottom of the excavated foundation must be compacted and flat.

● After the foundation is excavated, prevent water from entering the foundation. If water enters the foundation, excavate and refill the affected parts.

● The level tolerance between the foundation and the contact surface of the Container must be less than or equal to 3 mm.

● The foundation must be above the highest water level of the local area in history and at least 300 mm above the ground.

● Construct drainage facilities based on the local geological conditions and municipal drainage requirements to ensure that no water will accumulate at the equipment foundation. The foundation construction must meet the local drainage requirements for the maximum historical rainfall. The drained water must be disposed of in accordance with local laws and regulations.

● Reserve trenches or cable inlets for the ESS during foundation construction.

● The reserved holes on the foundation and the cable inlets at the bottom of the equipment shall be sealed.

● The foundation diagram is for reference only and cannot be used as the final construction drawing. The design specifications of the ESS foundation shall be reviewed based on the installation environment, geological features, and seismic resistant requirements of the project site.

6.4.4 Hoisting the ESS

	container user manual	Ver.	1.0
		Page.	80
		effective date	Sept.10th.2024

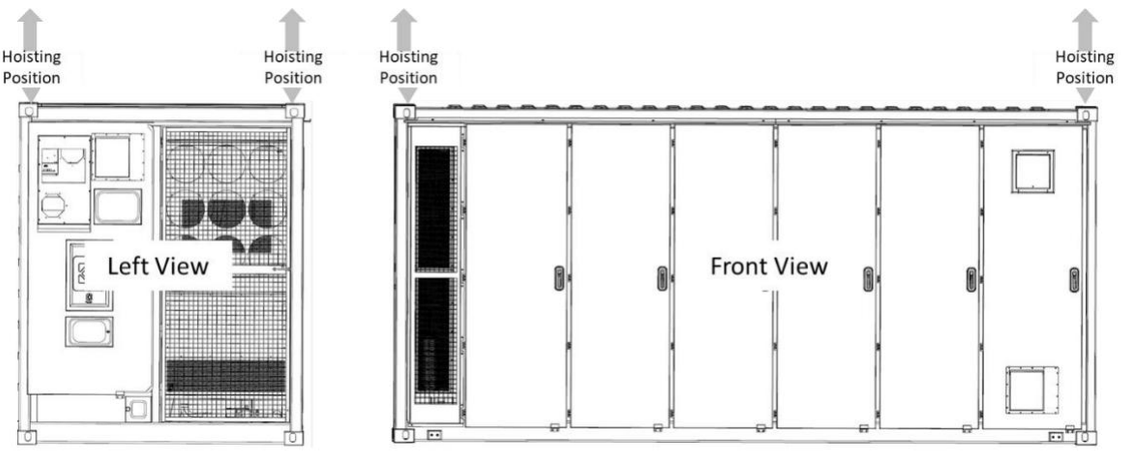

Hoisting Prerequisites:
Before installing the equipment, check the ESS for damage, such as holes and cracks, and check the equipment model.
If appearance is abnormal or the equipment model is incorrect, please contact the dealer.
Before hoisting, ensure the crane and hoisting ropes meet the load-bearing requirements.
The steel hoisting ropes are available.
An appropriate crane is selected based on standards of the crane company and assessed by professionals onsite.
The doors of the ESS to be hoisted have been closed.
It is recommended that the ESS be hoisted outdoors when the weather is clear and there is no wind

When installing or removing the hoisting equipment, do not drag it on the ESS to prevent scratches.

Before hoisting, ensure that the crane and hoisting ropes meet the load- bearing requirements.

	container user manual	Ver.	1.0
		Page.	81
		effective date	Sept.10th.2024

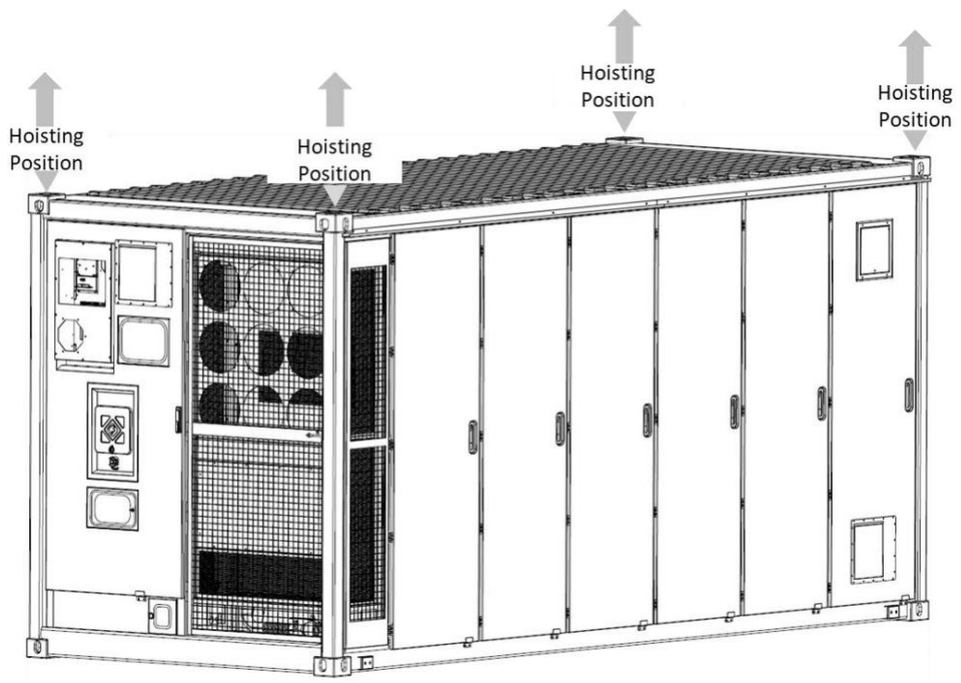

- Do not hoist or move the ESS after battery packs are installed.

Stage	Precautions
Before hoisting	Crane hoisting capacity ⩾ 40 t, working radius ⩾ 10 m (These are suggested information for reference only). If the onsite environment does not meet the required working conditions, ask a professional to assess the conditions.
	Only trained and qualified personnel are allowed to perform hoisting operations.
	Check that hoisting tools are complete and in good condition.
	Ensure that the hoisting tools are secured to a load-bearing object or wall.
	When the equipment is used outdoors, it is recommended that you hoist the equipment when the weather is good and there is no wind.
	Ensure that the crane and steel ropes meet the requirements before the hoisting.
	All doors of the equipment are closed and locked.

	Ensure that the steel hoisting ropes are securely connected.
	It is recommended that the equipment be hoisted from left to right or from right to left.

Stage	Precautions
During hoisting	Do not allow any unauthorized person to enter the hoisting areas and do not stand under the crane arm.
	Ensure that the crane is properly located and avoid long- distance hoisting.
	Keep the Container stable and horizontal during hoisting, and ensure that the diagonal gradient of the Container is less than or equal to 5 degrees.
	Ensure that the angle between two ropes is less than or equal to 90 degrees.
	Lift and land the Container slowly to prevent shock to equipment inside it.
	Remove the ropes after ensuring that the Container is placed evenly on the Container base.
	Do not drag steel ropes or lifting appliances. Do not collide with the equipment.
	Secure the Container you have hoisted before hoisting another Container.

6.4.5 Clearance Requirement

NOTICE

The following figure shows the minimum clearance requirements for installation and O&M. The equipment clearances must also meet the site selection requirements (see 6.1.1 Site Selection Requirements).

	container user manual	Ver.	1.0
		Page.	83
		effective date	Sept.10th.2024

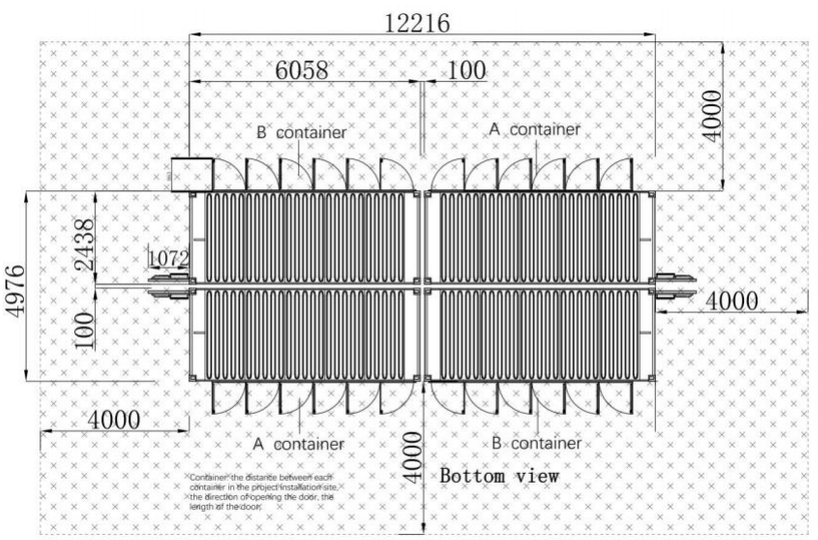

6.4.6 Forklift Requirement

Do not move the ESS after battery packs are installed.

● Before using a forklift, ensure that the forklift has a load-bearing capacity of at least 2 t.

● It is recommended that the length of the tynes be greater than or equal to 1.2 m, the width be 80 cm to 160 cm, and the thickness be 25 cm to 70 cm.

●

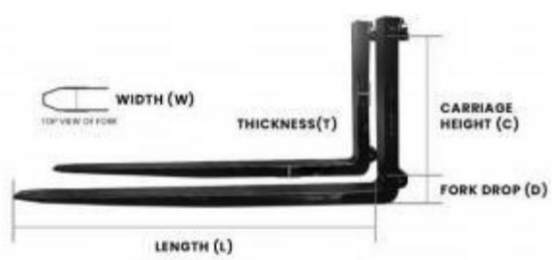

Lifting height of a forklift: If the foundation is less than or equal to 0.3 m high, the lifting height shall be greater than or equal to 2 m. If the foundation is greater than 0.3 m high, the lifting height shall be increased accordingly.

6.5 Connecting a Ground Cable for the ESS

6.5.1 Bottom Fixation for the ESS

	container user manual	Ver.	1.0
		Page.	84
		effective date	Sept.10th.2024

The bottom of the battery ESS Container is fixed by welding: the bottom of the Battery ESS Container is fixed by welding with the foundation. After the fixation is completed, the welding place is treated with anti-corrosion.

■ Front View

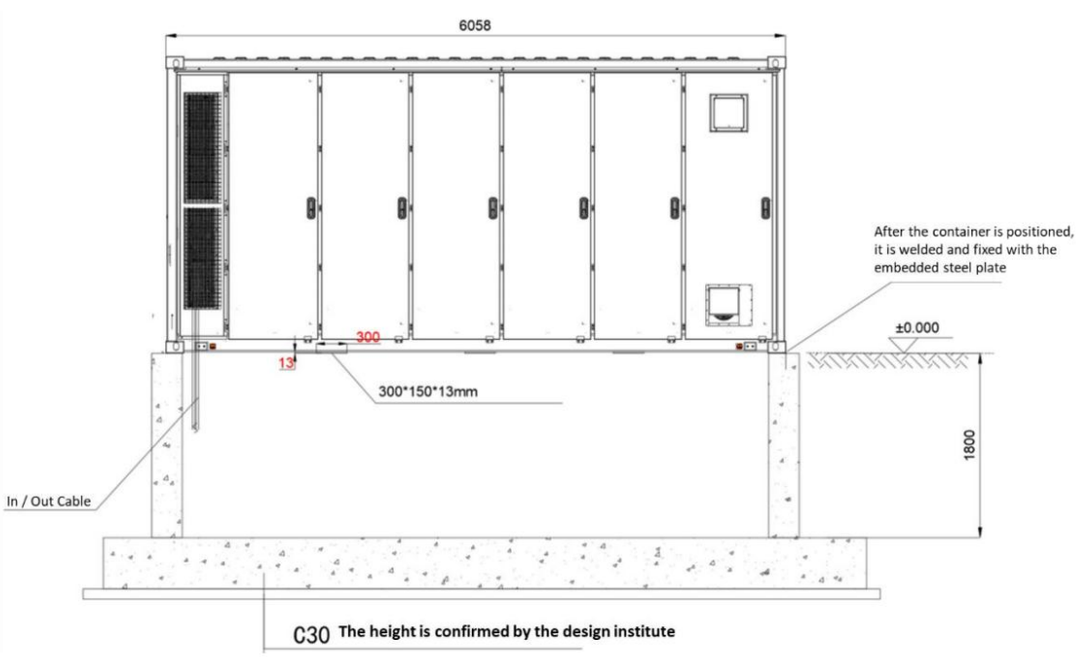

■ Bottom View

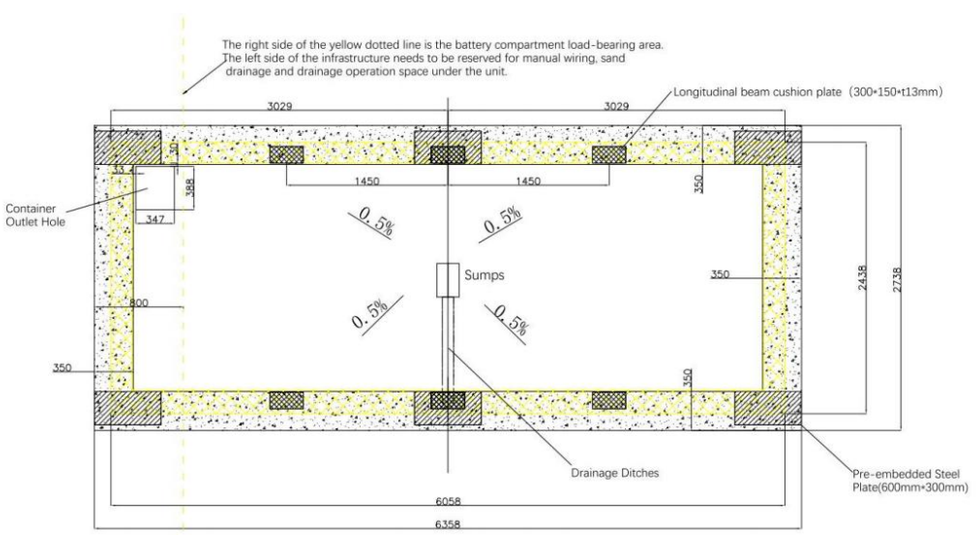

Consistent energy storage concept

	container user manual	Ver.	1.0
		Page.	85
		effective date	Sept.10th.2024

NOTICE

1) The entire megawatt-level BESS Container is installed on a concrete foundation.
2) The foundation is about 300mm above the ground, and the thickness of the foundation is determined by the civil engineer.
3) The upper surface of the container foundation should be on the same horizontal plane (no more than 5mm).
4) The four corners of the concrete foundation are pre-embedded steel plates, and the embedded steel plates are required to be firm and reliable.
5) After stacking the container on the bottom pier and adjusting the position, the container base is welded with the embedded steel plate and treated with anti-rust.
5) The middle position of the container needs to be supported by steel plates. For each side, there are should be at least 3 supporting points, which are evenly distributed to avoid deformation caused by local sinking in the middle of the container.
7) The foundation should be reserved for grounding flat steel, and the grounding of the container should be installed firmly, and at least two places need to be connected.
8) The two ends of all embedded pipes should be temporarily blocked to avoid the entry of debris and facilitate the later cable laying.
9) The above figure is a proposed foundation drawing, and the specific design should be subject to the design of a professional design institute;
10) The total weight of the battery system container is about 43 tons.

6.5.2 Grounding the ESS

Schematic diagram of on-site grounding of Battery ESS Container is showed below:

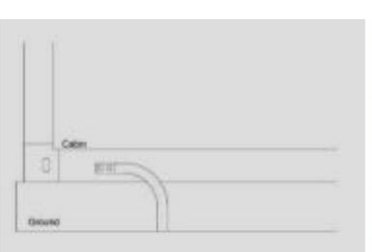



Grounding instructions:

• The Battery ESS Container reserves 4 grounding copper bars, which are connected to the grounding points welded on the channel beam (or U Bar) of Battery ESS Container through M10 bolts.
• The customer needs to connect at least two places.

	container user manual	Ver.	1.0
		Page.	86
		effective date	Sept.10th.2024

Recommendation: Use hand arc welding if possible

6.6 Installing Components

The Rain Cover and Rain Eaves will be shipped together with the Container.

6.6.1 Installation of rain cover for the liquid cooling unit

The rain cover for the air inlet of the liquid cooling unit, is bolted with M5 x 16 bolts, a total of 9 bolts, as shown in the figure below



6.6.2 Installation of the Rain Eaves for the Battery Container

Step1:
Unpack the package, take out the rain eaves, each system cabin is equipped with 2 sets of rain eaves, and each set of rain eaves is composed of symmetrical parts.

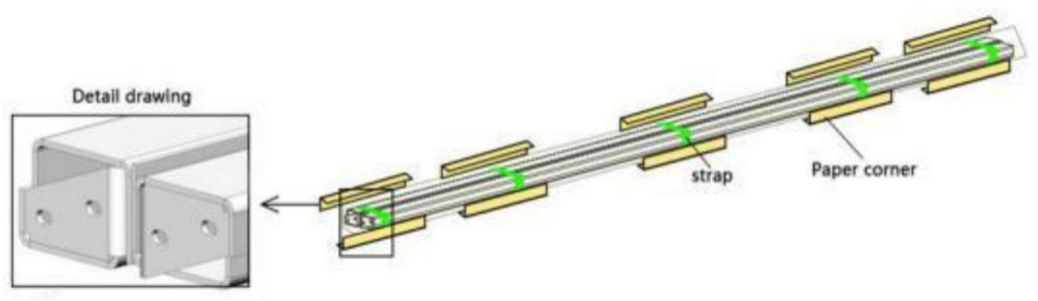

Step 2:
Use M5× 16 combination bolts and M5 nuts to connect the left and right symmetrical parts to form a whole.

	container user manual	Ver.	1.0
		Page.	87
		effective date	Sept.10th.2024

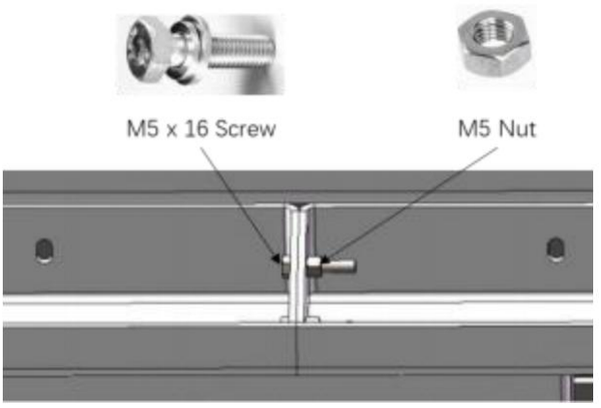

Step 3:

Fix the rain eaves onto the Container body, by aligning the hole position of the rain eaves with the corresponding hole position on the container, and bolt with M5× 16 combination bolts.

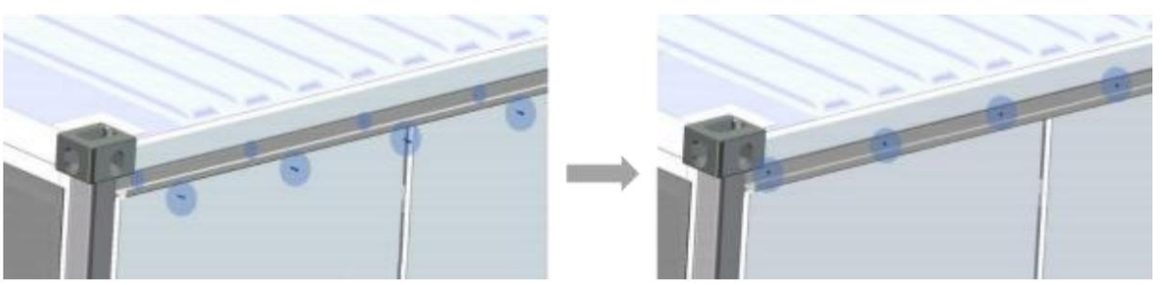

Step 4:

After the installation is completed, seal the joints uniformly to prevent rainwater from dripping down through the gaps;

	container user manual	Ver.	1.0
		Page.	88
		effective date	Sept.10th.2024

Install the rainproof eaves on the other side of the container following the same steps above

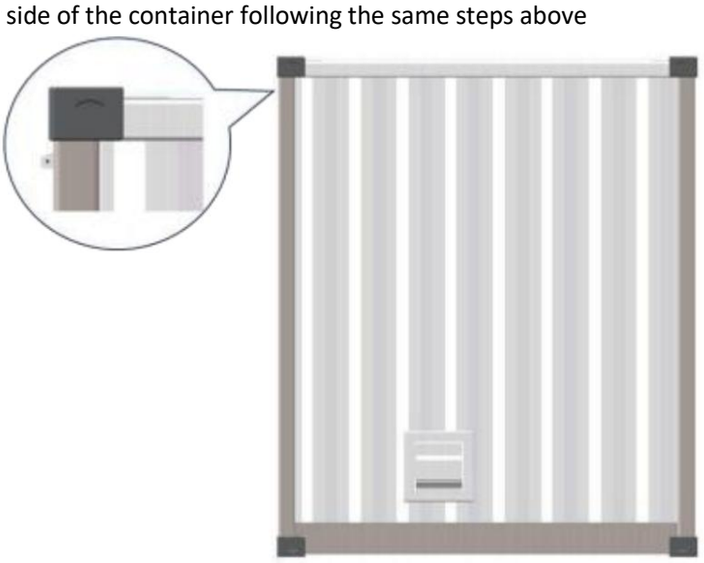

7. Battery Connection

7.1 Precautions

The instructions for safe use in this manual must be strictly followed at all times.
In order to avoid casualties and property damage that may occur during installation or operation, and to effectively extend the service life of the product, please be sure to read the safety instructions carefully.

Improper use or operation can cause certain hazards:

• Endanger the life and personal safety of the operator or third parties.

• Hazard the battery energy storage system or other property of the operator or third party

⚠ CAUTION

• The safety precautions in this manual cannot contain all the specifications that should be followed, and all work should be carried out in combination with the actual situation on site.

• CESC New Energy Technology shall not be liable for any loss caused by failure to follow the safety precautions in the manual.

⚠ WARNING

	container user manual	Ver.	1.0
		Page.	89
		effective date	Sept.10th.2024

• When installing equipment with hazardous voltages, be sure to follow the relevant codes and local installation safety guidelines.

• Please follow the rules regarding the proper use of tools and personal protective equipment.

• All connections must be made under clear guidance, and any form of speculation and fuzzy attempts is strictly prohibited.

• Tools with an insulating protective layer must be used.

•The connecting cable shall meet the requirements of voltage and current.

• Each connected connector must be safe and reliable to ensure that there will be no loose or false contact problems. The joints or connectors must be corrosion-resistant, wear-resistant, and shock-resistant.

• All kinds of connections must meet the requirements of relevant national standards, and all forms of arc discharge must be strictly complied and followed.

• The connection between the internal batteries must have an anti-vibration relaxation and anti-loosening device, and the connection of temperature, voltage and current sensors must also be safe and reliable to prevent loosening, aging and extrusion.

• It is strictly forbidden to expose any metal to any induction line.

• Any form of short circuit during connection is strictly prohibited.

• It is strictly forbidden for operators to operate without wearing protective devices.

• Connect key points: Make sure the connection is correct, reliable (not loose), in good contact, and free of short circuits.

• Once the connection is complete, it must be measured and confirmed point by point.

• All connection points must be made in such a way that they do not come into contact with the outer box or other components, or short circuit.

• If there is any other uncertain point, it should be confirmed by consulting CESC

personnel before implementation

7.2 Connecting the Cable

7.2.1 Tools Preparation

 Safety Helmet	 Insulation Gloves	 Insulation Shoes
 Reflective Vest	 Insulated safety tools	 High-voltage Cables
 Communication Cables	/	/

7.2.2 Connection Steps

Step 1

Check the DC Circuit Breaker and Switches' Status

Before connecting the cables, wear on insulated clothing first.

Then,

	container user manual	Ver.	1.0
		Page.	91
		effective date	Sept.10th.2024

● Open the door of the Integrated Control Panel by a professional,

● Check whether the following switches or circuit breakers are turned to " OFF" state (locations are showed in the figure)

– QS1, DC Circuit Breaker,

– QF2, MCB for Main Power,

– QF4 to QF14,

● Check whether the isolation switch of the high-voltage box is disconnected. If it is not disconnected, please turn it off first, and each switch is disconnected before wiring

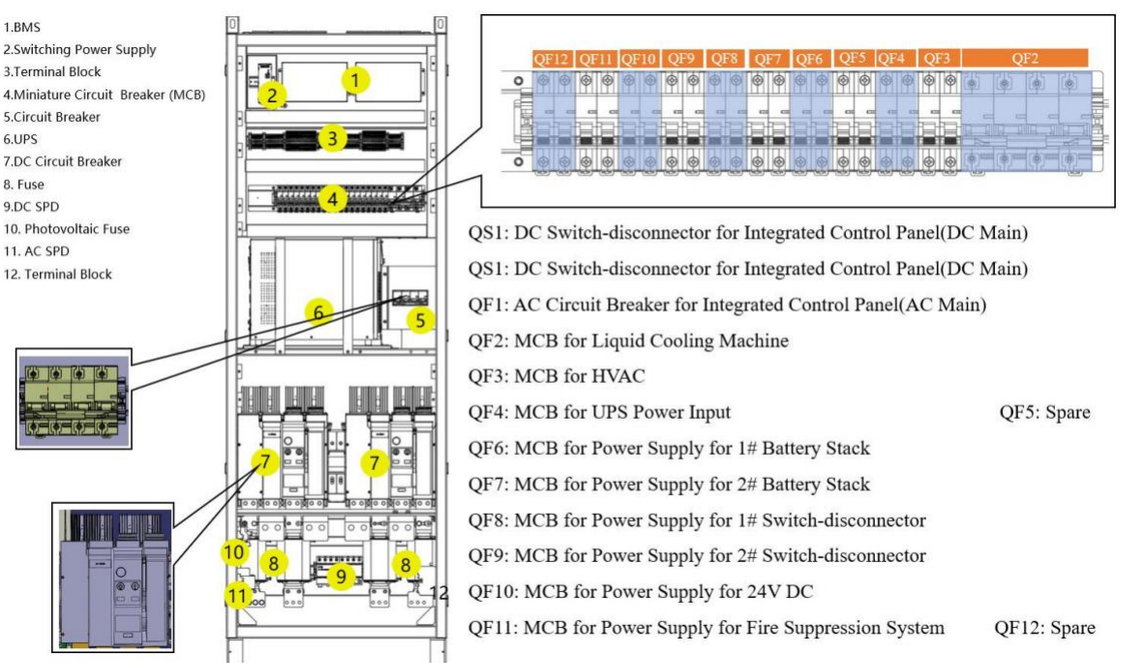

Step 2

Connecting the High-Voltage cable.

	container user manual	Ver.	1.0
		Page.	92
		effective date	Sept.10th.2024

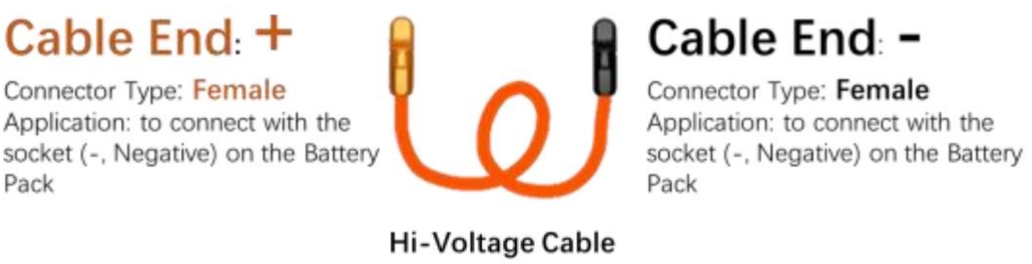

Before connecting the high-voltage cable, check whether the cable is in good condition and whether the label is complete.

If the cable is in good condition and label is complete, then connect the adjacent battery packs ' power sockets using the high voltage cable

1) Align the **orange end** of the intact cable with the **orange socket** of the adjacent battery pack, and insert it into the Lock position (a "click" sound will be heard);

2) Align the **black end** of the cable with the **black socket** of the other adjacent battery, and insert it into the **Lock position** (a "click" sound will be heard).

Repeat 1) and 2), so that the High Voltage side of the Battery Rack is connected.

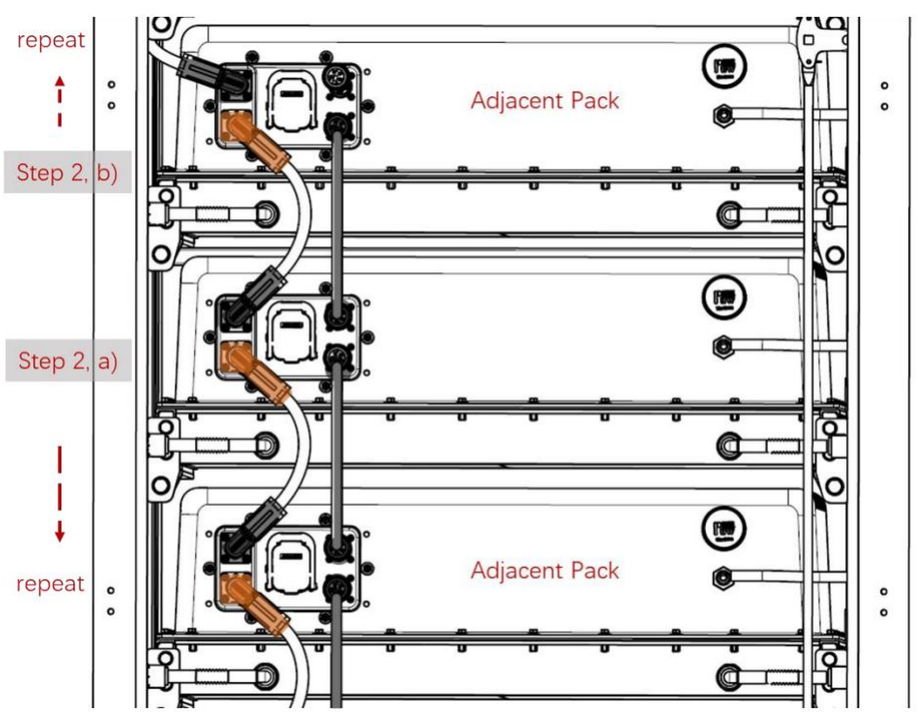

Consistent energy storage concept

	container user manual	Ver.	1.0
		Page.	93
		effective date	Sept.10th.2024

Step 3

Connecting the communication cable



If the communication cable is in good condition and the label is complete, then:

1) Connect one end of the communication cable to the communication port 2 of the adjacent battery pack, and insert it into the **Lock position** (a “click” sound will be heard, and then, turn the connector clockwise till it cannot be further turned);

2) Connect the other end of the communication cable to the communication 1 socket of the adjacent battery pack and insert it into the **Lock position** (a “ click” sound will be heard, and then turn the connector clockwise till it cannot be further turned).

Repeat 1) and 2), so that the communication terminals of the Battery Rack are connected.

	container user manual	Ver.	1.0
		Page.	94
		effective date	Sept.10th.2024

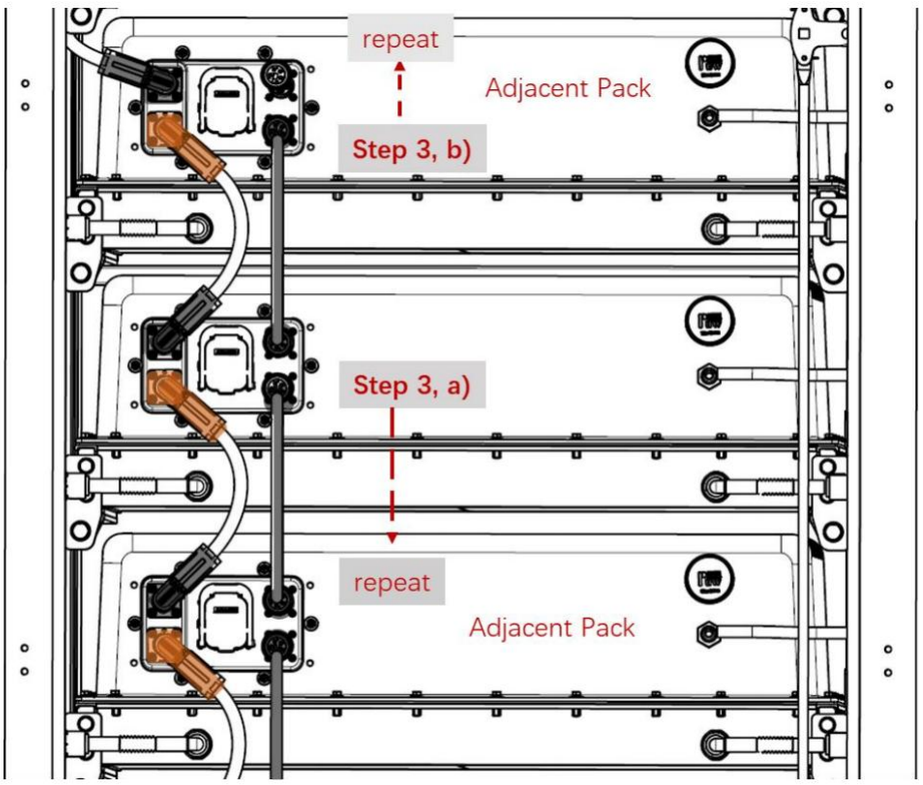

Adjacent Battery Packs after Connecting the High Voltage Cables and Communication Cables



Actual Picture - Pack after Cable Connection

--END

	container user manual	Ver.	1.0
		Page.	95
		effective date	Sept.10th.2024

8. Electrical Cable Connection

The company's products have a foolproof design.

The cable equipped with the product has a text indicating the purpose of each port.

The interface of electrical components is also marked.

8.1 ESS Container Electrical Wiring Overview

The schematic diagram of the wiring of the energy storage battery Container is shown in the figure below:

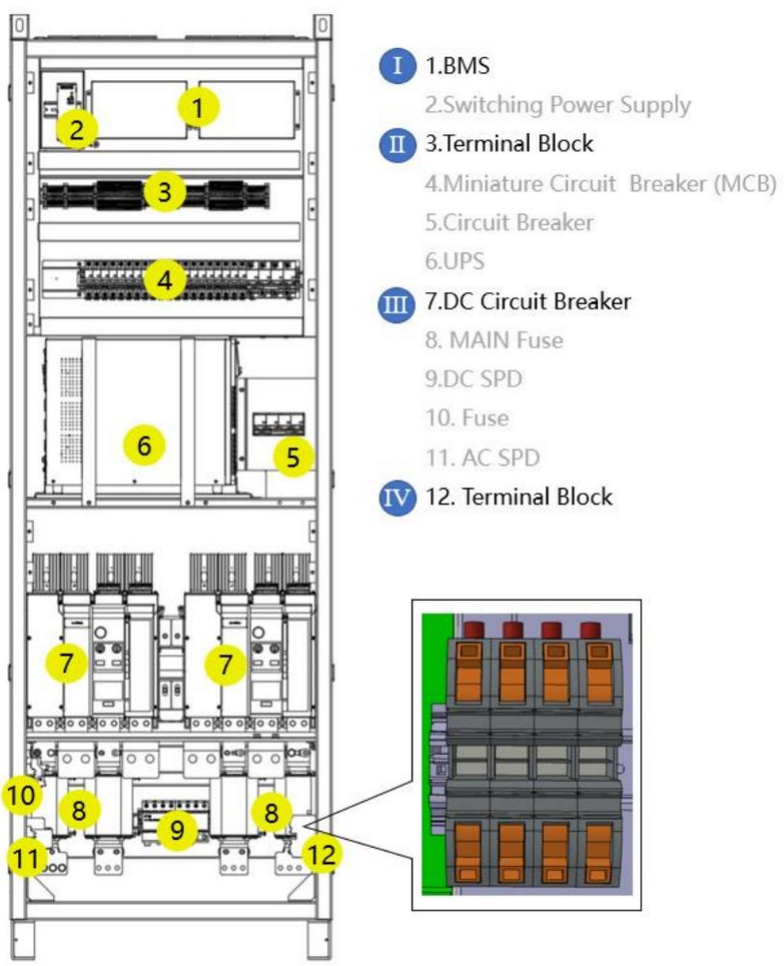

	container user manual	Ver.	1.0
		Page.	96
		effective date	Sept.10th.2024

Port Description

Item	Description	Recommended Model
I	Network Port	CAT5e shielded network cable
II	Communication Port	Shielded twisted pair 2×1.0mm²
III	DC Output Port	ZR-YJY23-DC1500V-1×185 mm²
IV	External auxiliary power input Port	ZR-RVV-4×25 mm²

8.2 Preparation Before Electrical Cable Connection

8.2.1 Installation Tools Preparation

 Safety Helmet	 Insulation Gloves	 Insulation Shoes
 Reflective Vest	 Insulated safety tools	

8.2.2 Open the Container door and panel door

	container user manual	Ver.	1.0
		Page.	97
		effective date	Sept.10th.2024

Step 1

Open the ESS Container Door

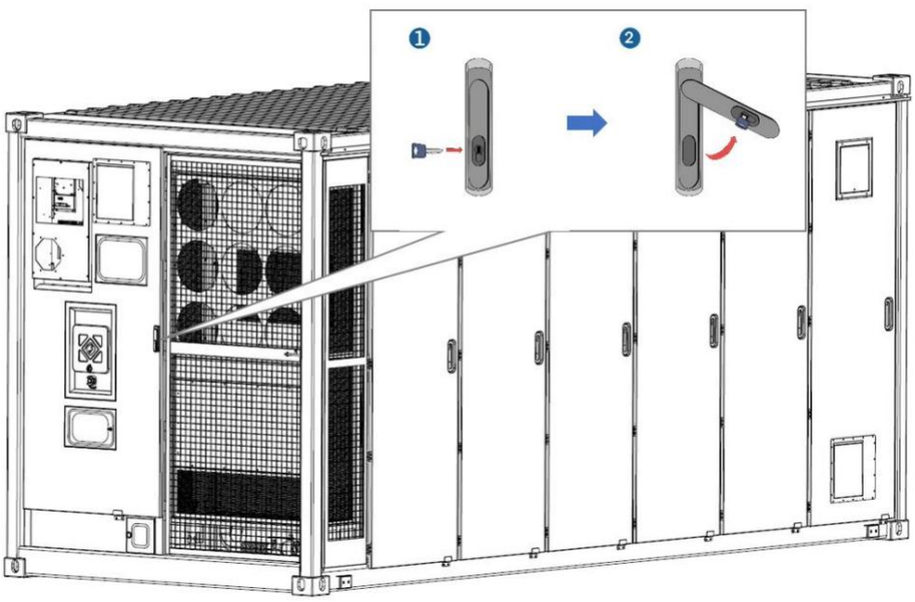

Step 2

Remove the protective covers on the Integrated Control Panel.

Unscrew the protective envelope

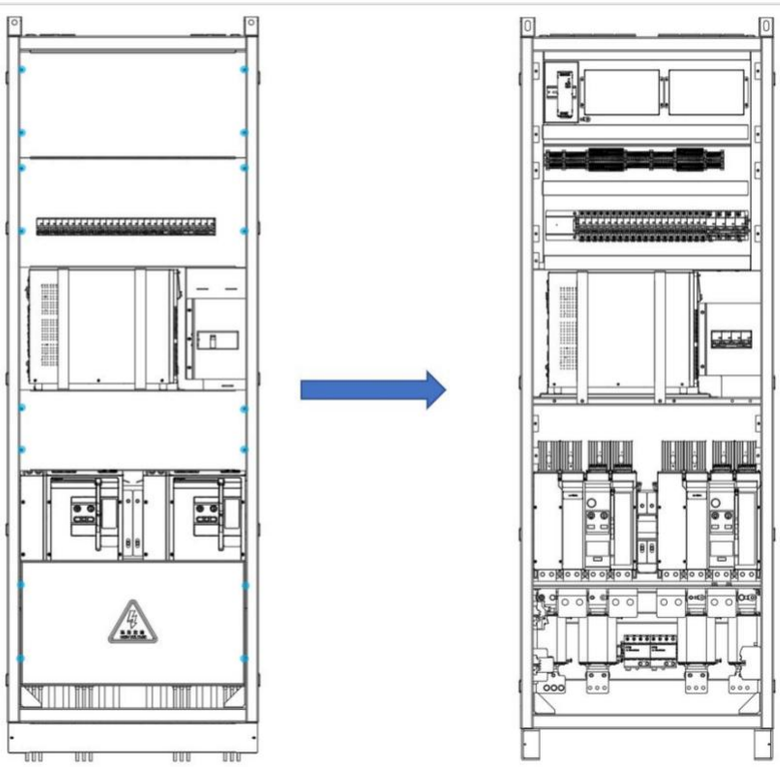

	container user manual	Ver.	1.0
		Page.	98
		effective date	Sept.10th.2024

NOTICE

The above pictures are for reference only, please refer to the actual product received

8.2.3 Preparing the Electrical Cables

The selected cable must meet the following conditions:

● It has sufficient current-carrying capacity. Factors affecting the current-carrying capacity of a conductor include, but are not limited to:

– Environmental conditions
– Type of conductor insulation material
– How the cable is routed
– Cable material and cross-sectional area
– The diameter of the cable must be selected according to the maximum current carrying capacity, and the length must be marginalized.

● All DC input cables should be of the same size and material.
● The specifications and materials of the three-phase AC output cable should be consistent.
● Be sure to choose a flame-retardant cable.

⚠ CAUTION

● The cables used should comply with local laws and regulations.
● The cable colors mentioned in the illustration in this manual are for reference only, please select the cable according to the local cable standard

8.3 DC Cable Wiring

● The wiring work between the internal equipment of Battery ESS Container has been completed before leaving the factory.
● The user only needs to connect the external wiring.

	container user manual	Ver.	1.0
		Page.	99
		effective date	Sept.10th.2024

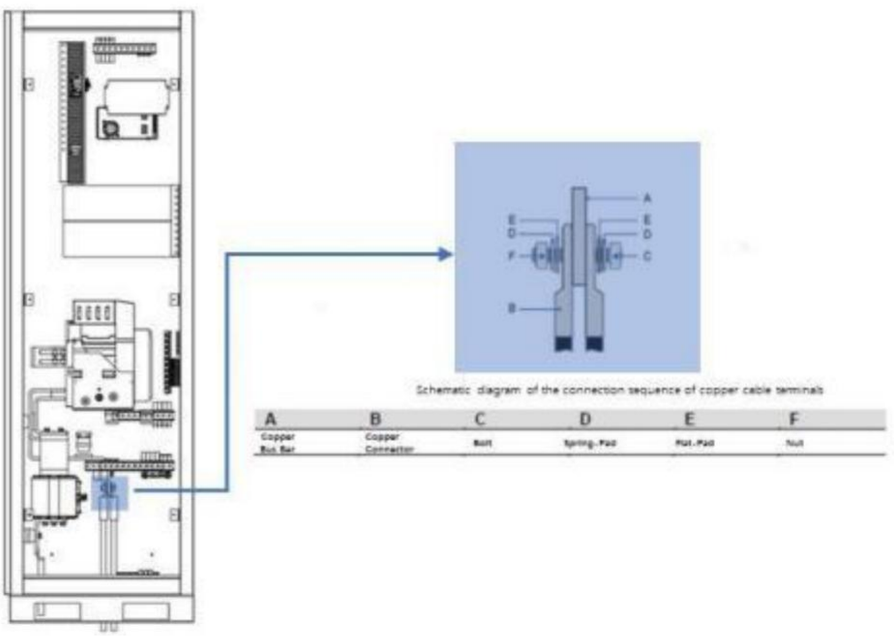

Wiring Description

Item	Description	Qty	Recommended Model
1	DC+ DC Wiring	8	1 × 185mm² Copper conductor power cables
2	DC- DC Wiring	8	1 × 185mm² Copper conductor power cables
3	Connector		DT185

8.3.1 DC cable wiring steps

Step 1

Confirm that the output switches of the parent and subordinate circuits of the Integrated Control Panel are disconnected (OFF).

Step 2:

Peel off the cable insulating layer at the end of the cable. The length of the insulating layer at cable end should be about 5mm plus the depth of the copper nose crimping hole of the wiring, as shown

in Figure below.

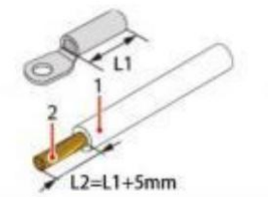

Step 3

Crimp the copper nose of the wiring. Select a suitable copper nose according to the selected cable size.

1)Place the exposed copper core part of the stripped wire into the crimping hole of the wiring's copper nose

2) Use a terminal crimping machine to press the wiring copper nose tightly. The number of crimps should be more than two lanes.

Step 4:

Install the heat shrink tubing.

1) Choose a heat shrinkable sleeve that is more consistent with the size of the cable, and the length should exceed the copper nose conduit by about 2cm.

2) Put the heat shrinkable sleeve on the wire's copper nose, so as to completely cover the crimping hole of the wire's copper nose.

3) Use a heat gun to tighten the heat shrink sleeve.

Step 5

Wiring

1) Select bolt (M16) that match the wire's copper nose.

2)Crimp the wiring copper nose onto the DC busbar .

--END

8.4 External power supply and communication interface

The Integrated Control Panel inside is equipped with communication ports and external auxiliary power supply ports.

The location of these ports is shown in the figure below.

Consistent energy storage concept

	container user manual	Ver.	1.0
		Page.	101
		effective date	Sept.10th.2024

In the field, wiring shall be carried out according to the terminal markings.

	container user manual	Ver.	1.0
		Page.	102
		effective date	Sept.10th.2024

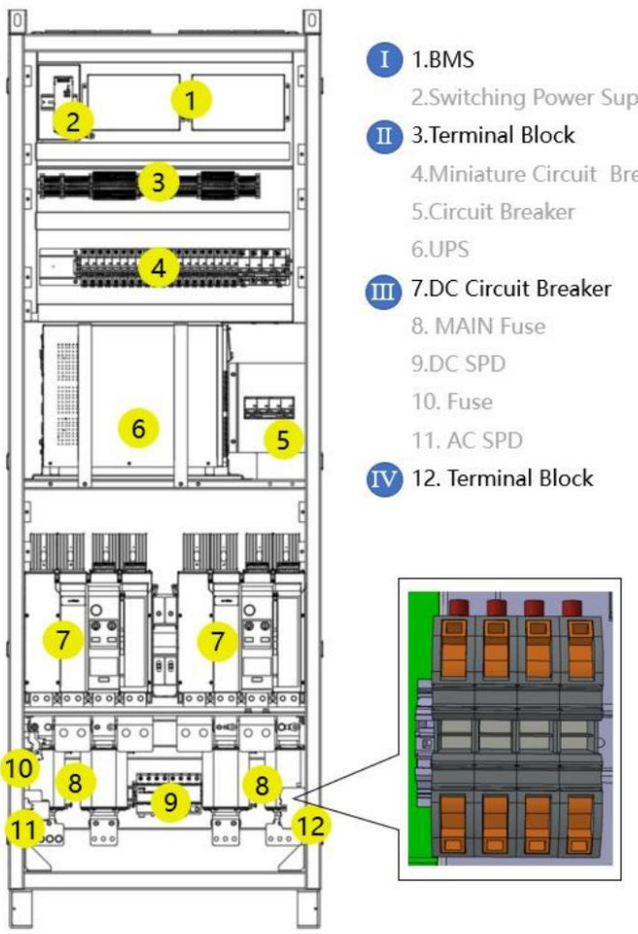

I 1.BMS
2.Switching Power Supply
II 3.Terminal Block
4.Miniature Circuit Breaker (MCB)
5.Circuit Breaker
6.UPS
III 7.DC Circuit Breaker
8. MAIN Fuse
9.DC SPD
10. Fuse
11. AC SPD
IV 12. Terminal Block

■ Wiring Description

Item	Location	Description	Qty	Recommended Model
I	BMS	External Network Port	1	CAT5e shielded network cable
II	Terminal Block	External Communication Line (Backbone Node, RS485, CAN)	2	Shielded twisted pair 2×1.0mm²
III	Terminal Block (mounted on lower right panel wall)	External Power Supply (3-Phase 4-Lines, 400VAC/50Hz)	4	4×25mm²

8.5 Operation after Electrical Cable Connection

After all electrical connections have been completed, the wiring should be thoroughly and carefully inspected.
At the same time, the following procedure shall be carried out:

	container user manual	Ver.	1.0
		Page.	103
		effective date	Sept.10th.2024

● Check that all the air inlets and outlets are free of foreign objects or blockages.

● The Battery ESS and BMS outlet holes and the surrounding gaps are tightly sealed and plugged with fireproof and waterproof materials

⚠ WARNING

- Failure to seal properly can lead to moisture ingress.
- Failure to seal properly can lead to rodent entry.

Lock the Container door

Step 1

Close the door of the Integrated Control Panel area, then lock the Battery ESS Container door, pull out the key, and keep it properly。

Step 2

Lock the outdoor Container door, pull out the key, and keep it safe。

--END

⚠ CAUTION

Make sure the sealing strip around the door doesn't curl when the door is closed.

	container user manual	Ver.	1.0
		Page.	104
		effective date	Sept.10th.2024

9. Power-on and Power-off Operation

9.1 Power-on

WARNING

The battery ESS container can only be put into operation after confirmation by a professional **AND** with the permission of the local power authority.

WARNING

For the battery ESS having a long downtime, before powering on, the ESS must be inspected comprehensively and meticulously, to ensure that all indicators meet the requirements before it can be powered on.

9.1.1 Power-on Check

Before powering on, check the following items carefully to ensure that they are correct.

● Check the equipment inside the battery container for foreign objects (such as small animals, residual tools, etc.);

● Check to make sure the switches and circuit breakers (MCBs) in the Integrated Control Panel are in the OFF state;

● Check to make sure the Isolation Switch on the front panel of the high-voltage box is in the OFF state;

● Check to make sure the air conditioning system is properly connected and the switch is in the OFF state;

● Check to make sure the positive and negative poles of the DC power cable in the Integrated Control Panel are connected correctly;

● Check to make sure the insulation of the connecting cables between the equipment inside the Battery ESS Container is NOT damaged or deteriorated;

● Check to make sure the terminals of the communication and power supply cables of the internal equipment in the Battery ESS Container are NOT loose;

● Check to make sure the equipment inside the Battery ESS Container has NO irritant or scorched smells;

● Check to make sure that both the PCS AC side and the DC side switch are in the disconnected (OFF) state;

● Clean up the installation site to ensure that it is clean and free of flammable and explosive materials.

9.1.2 Power-on Steps

Location of the DC Circuit Breaker and AC Circuit Breakers (including MCBs)

	container user manual	Ver.	1.0
		Page.	105
		effective date	Sept.10th.2024

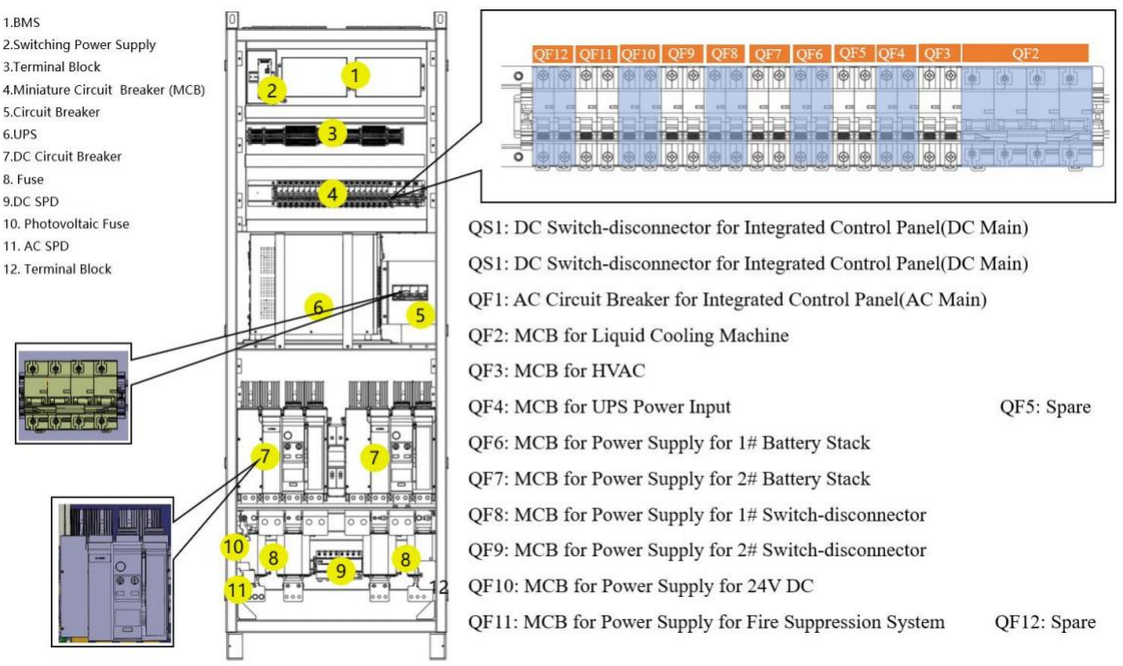

■ Power-On Procedure

step	item		remarks
1	Power-on the AC Auxiliary Power	Switch on the 380V AC power supply	As shown by (1) in figure 9-1.
2		Switch on the liquid cooling unit	As shown by (2) in figure 9-1.
3		Switch on the HVAC	As shown by (3) in figure 9-1.
4		Switch on the UPS Supply Power	As shown by (4) in figure 9-1.
5		Turn on the UPS	As shown by (5) in figure 9-1.
6		Switch on the switch gear of #1 battery stack power supply	As shown by (6) in figure 9-1.
7		Switch on the switch gear of #2 battery stack power supply	As shown by (7) in figure 9-1.
8		Switch on #1 DC Main Switch power supply	As shown by (8) in figure 9-1.
9		Switch on #1 DC Main Switch power supply	As shown by (9) in figure 9-1.
10		Switch on the 24V DC power supply	As shown by (10) in figure 9-1.

	container user manual	Ver.	1.0
		Page.	106
		effective date	Sept.10th.2024

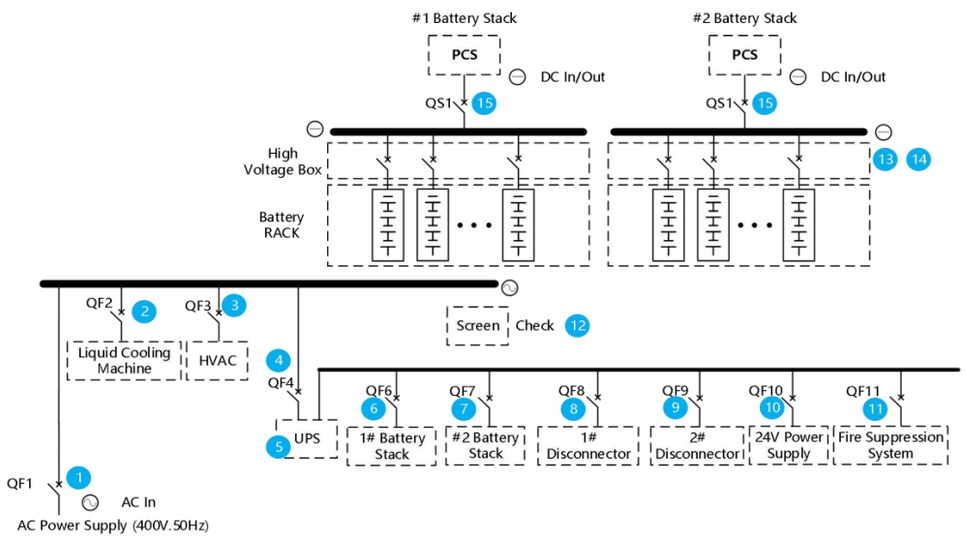

11		Switch on the fire suppression system	As shown by (11) in figure 9-1.
12		Check that each module works properly	As shown by (12) in figure 9-1.
13	Power-on the DC Power	Switch on the high voltage box, as shown by Figure 9-2	As shown by (13 in figure 9-1.
14		Turn on the high voltage box relay, using BMS	As shown by (14) in figure 9-1.
15		Turn on the battery side of the DC	As shown by (15) in figure 9-1.
16		power using BMS	As shown by in figure 9-3.

- Figure 9-1 Circuit Diagram of Power-On Procedure

- Remark:

- The above diagram shows the typical internal electrical layout of a 5MWh battery container when connected to the grid via a centralized inverter and transformer. In this project, string inverters are used, with each battery cluster connected to one 215kVA string inverter. Therefore, there is no DC bus circuit in the Master control box; it is equipped with auxiliary power distribution and a Cluster Battery Management Unit (CBMU), among other components.

- Figure 9-2-1 Manually Switch on Switch gear Box

	container user manual	Ver.	1.0
		Page.	107
		effective date	Sept.10th.2024

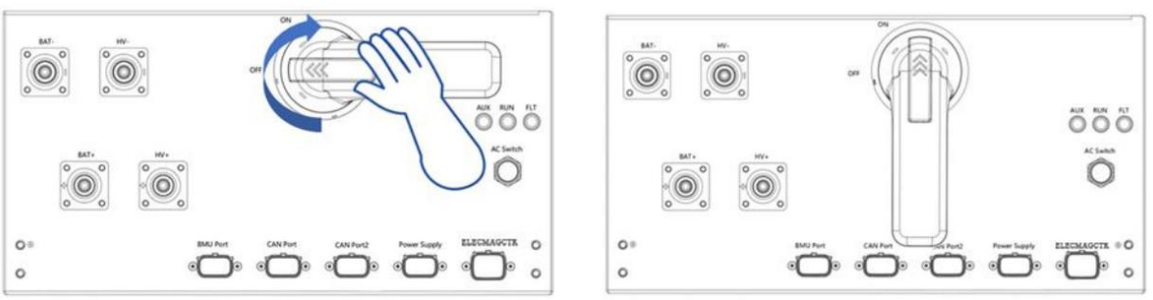

■ Figure 9-2-2 turn on AC switch on Switch gear Box

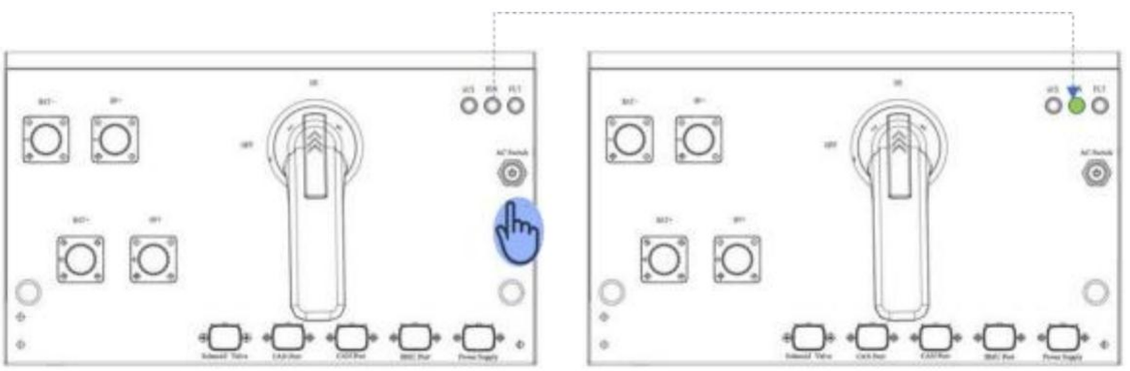

■ Figure 9-3 Powering on the high voltage box, using BMS



	container user manual	Ver.	1.0
		Page.	108
		effective date	Sept.10th.2024

Step 1:

Switch ON the external auxiliary power supply switch QF1, and then switch ON the miniature circuit breakers (MCBs) such as the liquid cooling unit, air conditioning system, and UPS power:

• Switch ON the power supply switch QF2 for the liquid-cooled unit;
• Switch ON the power supply switch QF3 of the air conditioning unit;
• Switch ON the switch QF4 for UPS input power;
• Turn ON the UPS power;
• Switch ON the power supply switch QF6 of the high-voltage box of #1 Battery Stack;
• Switch ON the power supply switch QF7 of the high-voltage box of #2 Battery Stack;
• Switch ON the power supply switch QF8 of #1 DC Main Switch;
• Switch ON the power supply switch QF9 of #2 DC Main Switch;
• Switch ON the 24V DC voltage power supply switch QF10;
• Switch ON the power supply switch QF11 for fire suppression system.

Step 2:

After step 1 is completed, turn on the display screen on the Integrated Control Panel.
Check on the LCD display to see whether the liquid cooling unit, air conditioner, fire suppression system and other modules can work normally.

Step 3:

● Check to make sure all modules are working normally,
● Manually switch ON the isolation switch of each cluster of high-voltage box (hold the handle of the high-voltage box, rotate it 90 degrees clockwise, and rotate the handle from OFF to ON as showed in the Figure9-2-1),
● Turn on the 220V-AC power supply switch of each cluster of high-voltage box (find the AC Switch button on the high-voltage box, and press it, as showed in the Figure 9-2-2).
● Then come to the display panel of the integrated control panel and press the main relay closure button on the screen, to complete the closure of the relays in each cluster of switch gear boxes.
● Observe the indicator light on the switch gear box.

AUX: power indicator, green light indicates that power supply is normal;
RUN: Running indicator, green light indicates that the total output relay in the switch gear box is turned ON (or connected). When the switch gear box is disconnected, the light is OFF;

FLT: Fault indicator, red light indicates that the system has fault, including hardware failure, internal communication failure, battery failure, etc.;

Step 4:

Turn ON the main DC Circuit Breaker switch QS1 in the Integrated Control Panel by clicking the button on the display screen;

Step 5

Consistent energy storage concept

	container user manual	Ver.	1.0
		Page.	109
		effective date	Sept.10th.2024

● After the battery rack is powered on, the third-level BMS (BAMS) will automatically issue a closed relay instruction to the second-level BMS (BCMS), and the second-level BMS (BCMS) will be engaged, and the main positive and negative relays will be in pick-up state, the DC bus of the 9-racks battery racks will be successfully powered on,

● the third-level BMS monitoring display will show the messages in GREEN (as shown in the figure below), and the system display description status will be displayed as "Normal", and the power-on will be completed, and it will enter the state of charging and discharging.



--- END

WARNING

If the circuit breaker trips during the power-on process, suspend the closure of other circuit breakers, and immediately check whether the subordinate circuit's load of the tripping circuit breaker has a short circuit.

9.2 Power-off

9.2.1 Planned Power-off

	container user manual	Ver.	1.0
		Page.	110
		effective date	Sept.10th.2024

Location of the DC Circuit Breaker and AC Circuit Breakers (including MCBs)

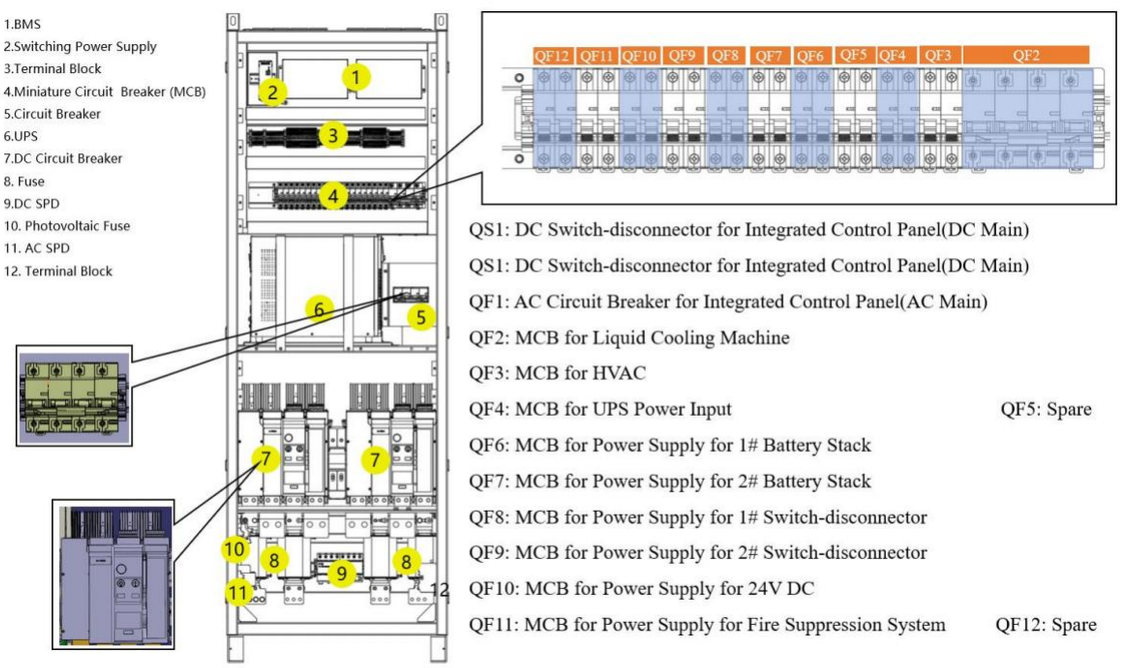

■ Power-off Procedure

step	item		remarks
1	Power-off the DC Power	Turn off the battery side of the DC power (via BAMS), by clicking the “M Breaker (cut)” button on the LCD Display.	As shown by (1) in figure 9-4 and as shown by Figure 9-5.
2		Turn off the high voltage box relay (via BAMS), by clicking the “ M-Relay (cut)” button on the LCD Display	As shown by (2) in figure 9-4 and as shown by Figure 9-5.
3		Switch OFF the high voltage box, as shown in Figure 9-6.	As shown by (3) in figure 9-4

	container user manual	Ver.	1.0
		Page.	111
		effective date	Sept.10th.2024

4	Power-off the AC Auxiliary Power	Switch OFF the fire suppression system.	As shown by (4) in figure 9-4.
5		Switch OFF the 24V DC power supply.	As shown by (5) in figure 9-4.
6		Switch OFF the #2 DC Main Switch power supply	As shown by (6) in figure 9-4.
7		Switch OFF the #1 DC Main Switch power supply	9-4.
8		Switch OFF the high voltage box of #2 battery stack power supply	As shown by (8) in figure 9-4.
9		Switch OFF the high voltage box of #1 battery stack power supply	As shown by (9) in figure 9-4.
10		Turn OFF the UPS.	As shown by (10) in figure 9-4.
11		Switch OFF the UPS input power supply.	As shown by (11) in figure 9-4.
12		Switch OFF the Air Conditioner.	As shown by (12) in figure 9-4.
13		Switch OFF the liquid cooling unit.	As shown by (13) in figure 9-4.
14		Switch OFF the 380V AC power supply .	As shown by (14) in figure 9-4.

■ **Figure 9-4** Circuit Diagram of Power-Off Procedure

Remark:

The above diagram shows the typical internal electrical layout of a 5MWh battery container when connected to the grid via a centralized inverter and transformer. In this project, string inverters are used, with each battery cluster connected to one 215kVA string inverter. Therefore, there is no DC bus circuit in the Master control box; it is equipped with auxiliary power distribution and a Cluster Battery Management Unit (CBMU), among other components.

	container user manual	Ver.	1.0
		Page.	112
		effective date	Sept.10th.2024

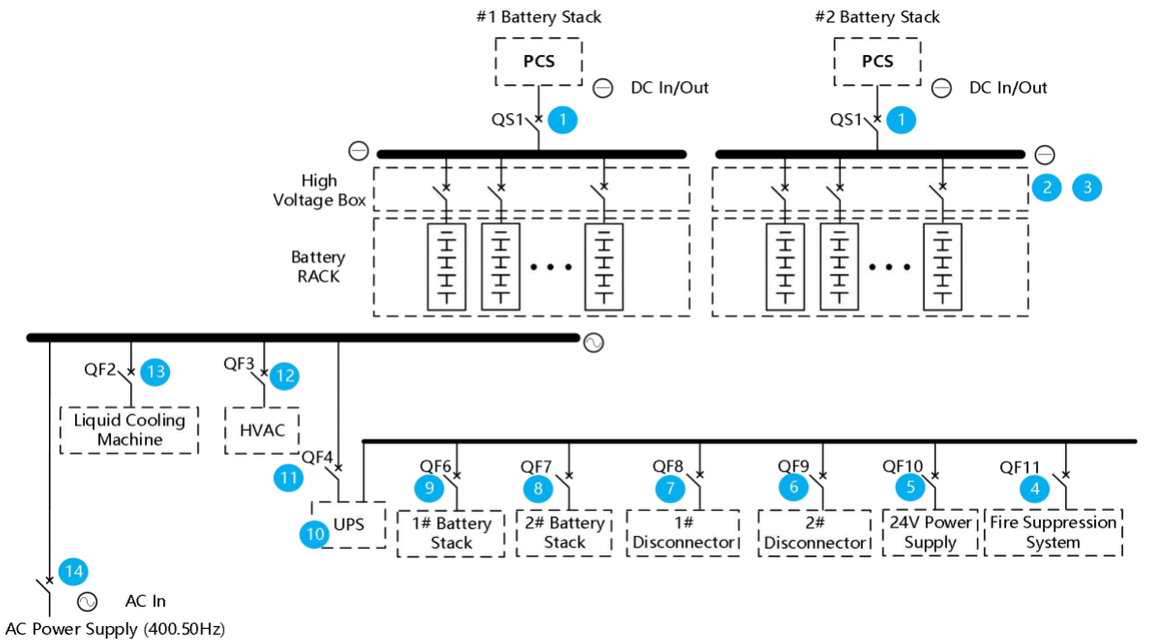

■ **Figure 9-5** Powering off the switch gear box, using BMS

	container user manual	Ver.	1.0
		Page.	113
		effective date	Sept.10th.2024



Step 1

Make sure the PCS or the EMS side has turned OFF the AC and DC power to the Battery ESS. For example, on the PCS LCD panel or through the EMS control system, click the stop button, disconnect the AC side and DC side switches after the PCS is withdrawn, and enter the shutdown state;

Step 2

Switch OFF the DC Circuit Breaker QS1 in the Integrated Control Panel。

Step 3:

● By clicking on the screen on the Integrated Control Panel as shown in **Figure 9-3**, the battery cluster relay disconnection instruction is issued to the three-level BMS, so that each cluster of high-voltage boxes is disconnected (by the Relays in the high voltage box);

● Manually disconnect the isolation switch of each switch gear box cluster - hold the handle of the switch gear box, rotate 90 degrees counterclockwise, and rotate the handle from ON to OFF, as shown in Figure 9-6-1;

Figure 9-6-1 Manually Switch on High Voltage Box

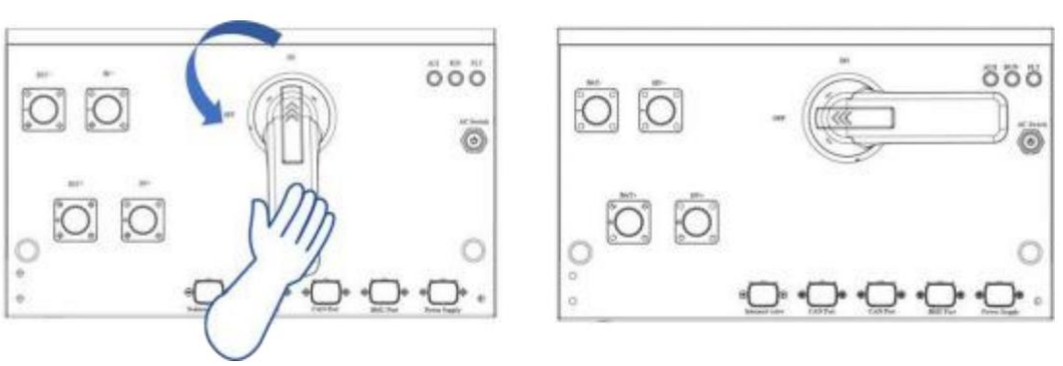

Consistent energy storage concept

	container user manual	Ver.	1.0
		Page.	114
		effective date	Sept.10th.2024

● Disconnect the 220V-AC power supply switch of each cluster of switch gear boxes (find the AC Switch button on the switch gear box and press it, as showed in the Figure 9-6-2).

Figure 9-6-2 Manually Switch off switch gear Box

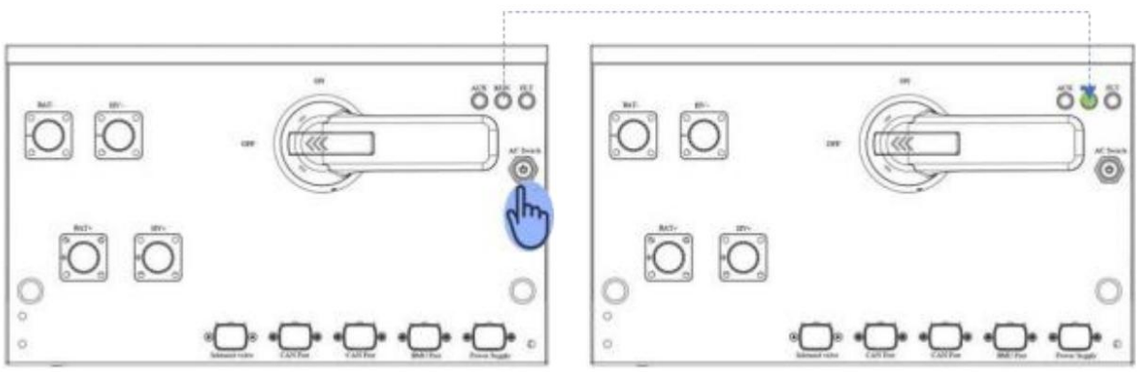

Step 4

Switch OFF air conditioning system, fire protection system, UPS, etc.;

• Switch OFF the fire suppression system's power supply switch QF11;
• Switch OFF the 24V DC voltage power supply switch QF10;
• Switch OFF the QF9 for the high-voltage box;
• Turn OFF the UPS ;
• Switch OFF the UPS power supply switch QF8;
• Switch OFF switch QF5 for the air conditioning unit;
• Switch OFF QF4 for the liquid cooling unit;

Step 5

Switch OFF the AC auxiliary power supply QF2 in the Integrated Control Panel.

---END

9.3 Unplanned Power-off (Outage)

1. Fire Accidents:

Please contact your local fire department professional IMMEDIATELY.

2. Unplanned outages (outages due to failures):

Please contact CESC in time

	container user manual	Ver.	1.0
		Page.	115
		effective date	Sept.10th.2024

10. Fire Extinguishing System

WARNING

1）Please comply with the fire laws and regulations of the country/region where the project is located. Check and maintain the fire equipment regularly to ensure a normal operation of all functions.
2）The battery container is equipped with an automatic fire extinguishing system, which is not an emergency and shall not trigger the fire switch at will.
3）All fire-related components (combustible gas sensor, smoke sensor, temperature sensor, input and output modules, aerosol (if any)) in the BESS products sold by CESC in the UL area meet UL standards. For other certification or to meet other fire protection requirements in the project location, please contact CESC.

10.1 Description of the System

The Battery ESS Container is equipped with a water firefighting system, a gas fire extinguishing system, an automatic fire alarm and linkage control system, a combustible gas detection and alarm system and a ventilation system.
The system is a set of efficient fire extinguishing equipment, which can detect the fire by fire detection devices such as combustible gas detection equipment, smoke detectors, and temperature detectors.

When an abnormality is detected, a signal is sent to the station-level alarm host (Battery ESS Site Station Level) through the host for fire alarm, and control the battery system operation through corresponding logic control.

10.2 Control Logic

The system has two control modes: Automatic Control Mode and Electrical Manual Control Mode.

Automatic Control Mode:
● When there is no one in the protection area, switch the control mode in the automatic fire extinguishing controller, to the "**Automatic**" position, and the fire extinguishing system is in an automatic control state.
● When the first detector in the protection area sends out a fire signal, an alarm is issued to indicate the location of the fire and remind the staff to pay attention.

Electrical Manual Control Mode:
● When someone is working or on duty in the protection area, switch the control mode transfer switch in the automatic fire extinguishing controller, to the "**Manual**" position, and the fire extinguishing system is in a manual control state.
● When a fire occurs in the protection area, you can press the manual start button in the automatic fire extinguishing controller, or activate the emergency start button outside the door

	container user manual	Ver.	1.0
		Page.	116
		effective date	Sept.10th.2024

of the protection area, and the fire extinguishing procedure can be started and the fire extinguishing can be implemented.

In the Automatic Control Mode, electrical manual control can still be realized.

Before the implementation of electrical manual control, all personnel in the protection area must be evacuated.

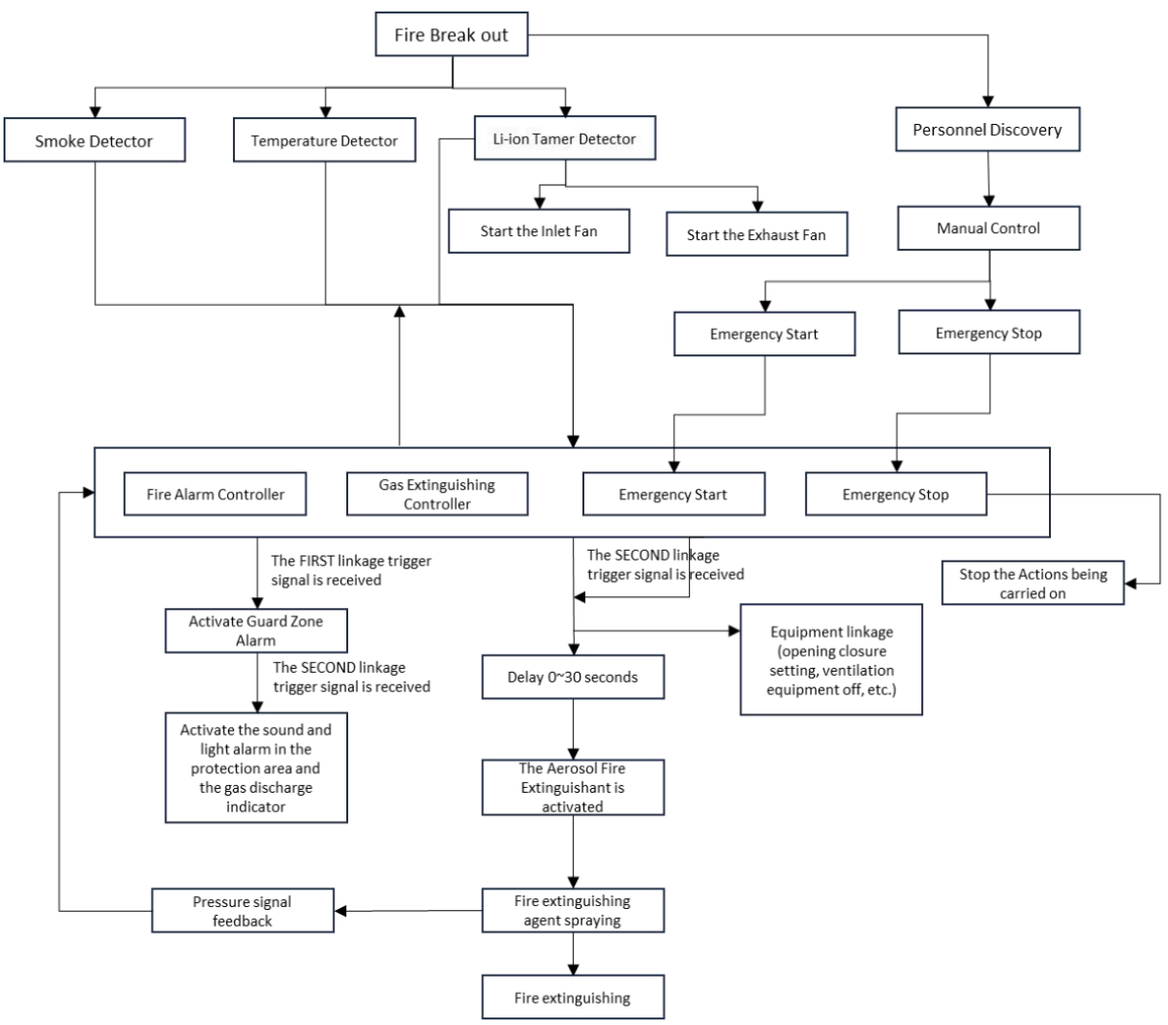

10.3 Exhaust System

The combustible gas detection equipment is installed in the battery cabinet.
Once the detected combustible gas reaches 10% LEL, the combustible gas detection equipment sends a signal to the station-level alarm host through the fire host, for fire warning, and turns on the exhaust system (open the fire intake air intake equipment and fire exhaust equipment).).

	container user manual	Ver.	1.0
		Page.	117
		effective date	Sept.10th.2024

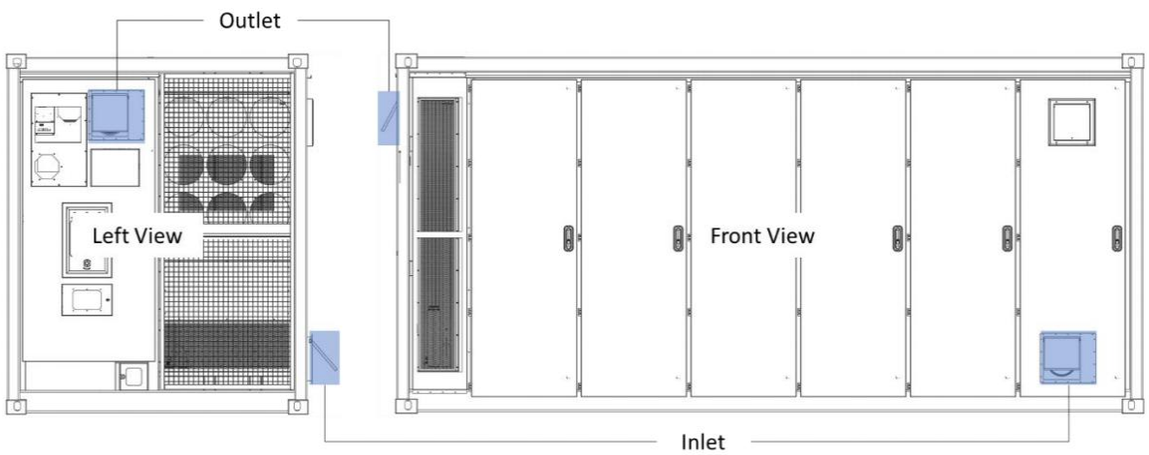

The explosion-proof Exhaust system comes with its own electric shutters, which are closed under normal conditions.

When the controller host of the explosion-proof Exhaust system receives the alarm signal sent by the gas detector, it sends a signal to the ventilation and exhaust system.
When the combustible gas concentration is higher than the threshold (10% LEL), the electric shutter of the exhaust fan is opened, the explosion-proof fan is turned on, and the ventilation electric shutter is opened to discharge the combustible gas in the energy storage box.

The main controller receives a signal to automatically shut down the exhaust system.

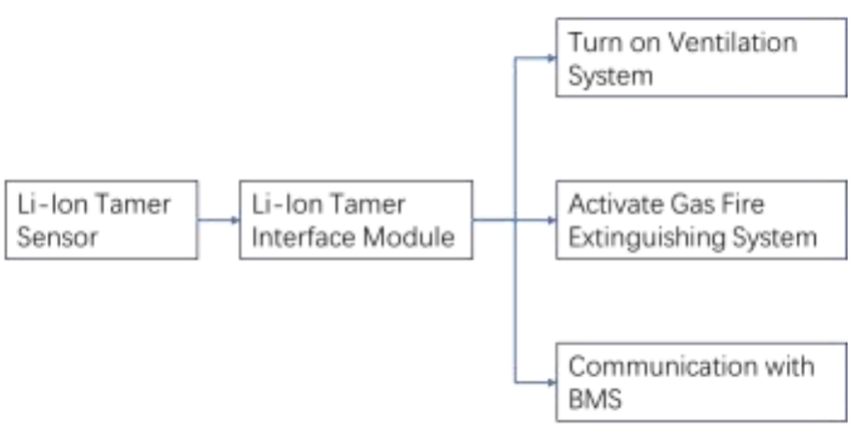

10.4 Aerosol Fire Extinguishing System

The Aerosol Fire Extinguisher uses the GreenSol© A500 Fire Extinguisher, which is based on the environment friendly SFE Powdered Aerosol technology, listed on the USEPA Halon Alternatives

	container user manual	Ver.	1.0
		Page.	118
		effective date	Sept.10th.2024

SNAP list as Powdered Aerosol A.
The A500 model is designed to extinguish and provide extinguishment for Class A (solid fuel), B (liquid and gas fuel), and C (electrical) fires in defined enclosures.
The extinguishing agent delivered by the GreenSol© system is a powdered aerosol created in-situ by a chemical reaction taking place in a non-pressurized container, delivering dry powder small particles (1-5 microns) floating in inert gases.
SFE (Powdered Aerosol A) acts on the fire in more than one way. It combines the heat absorption capability of dry powder extinguishing agents with the chemical interfering capability such as performed by Halon extinguishing agents.
SFE aerosol creates active species, solid particles, that act either by heterogeneous chemical reactions on the particles surface or by homogeneous chemical reactions in the gaseous phase with the fire chain precursors (OH, H) preventing their recombination and thus stopping the combustion process.
In combination with the control panel, the Aerosol extinguishing system detects the fire at an early stage and eliminate it out.

10.5 Water-based Fire Suppression System

The BESS has a water fire suppression system that can effectively extinguish the fire.
The water-based fire suppression system is equipped with sprinkler prefabricated pipes and nozzles, with which the water system can start automatically or be started manually.

If an automatic sprinkler water-based fire suppression system is required, subsequent construction is necessary.

Water supply pipes and equipment outside the BESS need to available to be connected to the BESS sprinkler connections, please decide according to the actual project.

The sprinkler system adopts upright nozzles to ensure that the water can be sprayed to all areas in the Container.

Each protection zone is provided with two independent detection loops:

When the first fire signal, send out an alarm, indicate the location of the fire, remind the staff to pay attention.
When the second detector also sends out a fire signal, the automatic fire extinguishing controller begins to enter the delay stage (0-30s adjustable).

After the delay, the fire extinguishing instruction

is issued to the starting bottle that controls the corresponding protection area, the solenoid valve is opened, and then the gas storage cylinder is opened, and the fire extinguishing operation is carried

out to the fire area.

At the same time, the alarm controller receives the feedback signal of the pressure signal, and the control panel sprays the indicator light on.

When the alarm controller is in the manual state, the alarm controller only sends out the alarm signal, does not output the action signal, after the fire alarm is confirmed by the personnel on duty, press the emergency start button on the alarm control panel or the emergency start and stop button at the entrance of the protection area, the system can be started, and the fire extinguishing agent can be sprayed

11.maintenance guidance

11.1 Before Maintenance



- Do not open the battery compartment for maintenance in rainy, wet or windy weather. If it is not followed,CESC won't be liable for the loss caused.
- Do not open the cabinet door when the humidity is high in rain, snow, or fog. at the same time, ensure that the cabinet door is closed The seal should not be curled.
- To reduce the risk of electric shock, do not perform any maintenance or repair operations beyond this manual.If necessary, contact CESC customer service for maintenance and overhaul.
- ✧ In order to safely and effectively maintain the system, maintenance personnel must be professionally trained and qualified before taking up the post. work
- ✧ When performing maintenance work, personnel must comply with the relevant safety precautions and use the necessary tools and protection equipment.
- ✧ Do not wear metal jewelry such as gold and silver jewelry and watches when operating and maintaining the system.
- ✧ Use insulation tools, wear insulation gloves, and shoes during maintenance.
- ✧ Clean up tools and materials immediately after maintenance. Do not place metal objects on the inside or top of the device.
- ✧ Before connecting and removing system cables, turn off all high and low voltage switches.
- ✧ System operation and maintenance personnel have any questions about the operation and maintenance of the device. Please contact the manufacturer.

11.2 Cabin maintenance

	container user manual	Ver.	1.0
		Page.	120
		effective date	Sept.10th.2024

11.2.1 Repair Measures for damaged appearance

Check the appearance damage, according to the different levels of damage, choose the appropriate solution.
Case 1: Surface dirt can be erased
case 2: Surface dirt can not be erased
case 3: Primer damage reveals the substrate



It is necessary to check whether the protective paint sprayed on the shell is falling off or falling off. If found, repair it in time. Repaint the entire exterior with special protective paint every 5 years.
Maintenance operation measure for case 1

Tools prepared

No.	items	remarks
1	rag	
2	water	
3	alcohol	

(1) Use a rag (or other scrubbing tools) to dip in water and scrub the surface of the dirty parts .
(2) If dirty surface cannot be scrubbed clean with water, scrub with 97% alcohol until the surface cleanliness reaches an acceptable level Wring. (You can also try using local, non-corrosive cleaners.)

Maintenance operation measure for case 2
Tools prepared

No.	items	remarks
1	rag	
2	water	
3	alcohol	
4	Abrasive paper	
5	Hair brush	
6	RAL7035 paint	

(1) Use sandpaper to polish the surface paint or scratch parts to make the surface smooth.
(2) Use a rag dipped in water or 97% alcohol to scrub the damaged part and remove surface stains.
(3) After the surface is dry, use a soft brush to repaint the scratched parts of the paint, and keep the paint brushing as uniform as possible

	container user manual	Ver.	1.0
		Page.	121
		effective date	Sept.10th.2024







Maintenance operation measure for case 3

Tools prepared

No.	items	remarks
1	rag	
2	water	
3	alcohol	
4	Abrasive paper	
5	Hair brush	
6	RAL7035 paint	
7	Zinc-rich primer	

1) Use sandpaper to polish the damaged parts of the paint, remove surface rust and other burrs, and make the surface smooth.
(2) Use a rag with water or 97% alcohol to scrub the damaged part and remove surface stains and dust.
(3) After the surface is dry, the exposed part of the substrate is sprayed with zinc-rich primer for protection. Spray should completely cover the exposed base material.
(4) After the primer dries, use a soft brush to repaint the damaged part, and the paint brushing should be uniform.

	container user manual	Ver.	1.0
		Page.	122
		effective date	Sept.10th.2024



11.2.2 Checking Door locks and Hinges

After the cleaning work is finished, the door locks and hinges of the cabinet should be checked whether they can be used normally and whether they are in good condition. If necessary
door locks, hinges, etc., should be properly lubricated.

11.2.3 Checking Seals

The seal in good condition is an important guarantee to effectively prevent water seepage inside the cabinet, should be carefully checked, if there is damage, please replace it immediately.

11.2.4 Warning Identifier

Check that warning signs, labels, etc. are clearly visible and free from defacement. Replace if necessary.

11.3 Liquid Cooling System Maintenance

11.3.1 Maintenance of liquid cooling units

Air filter maintenance: The role of the air filter is to prevent external foreign matter, such as: dirt, soot, dust and others that may be carried by air debris. Dust and dirt can cause cold or heat loss, and should be cleaned or replaced regularly
Net (same size as the filter with the original unit). The cleaning cycle of the filter should be based on the installation position and location
The amount of dirt and foreign bodies caused by the environment depends. When cleaning, you can gently pat the surface of the filter to remove the thick blockage
Plug, and then wash in warm water with detergent. Dry thoroughly before new use.

	container user manual	Ver.	1.0
		Page.	123
		effective date	Sept.10th.2024

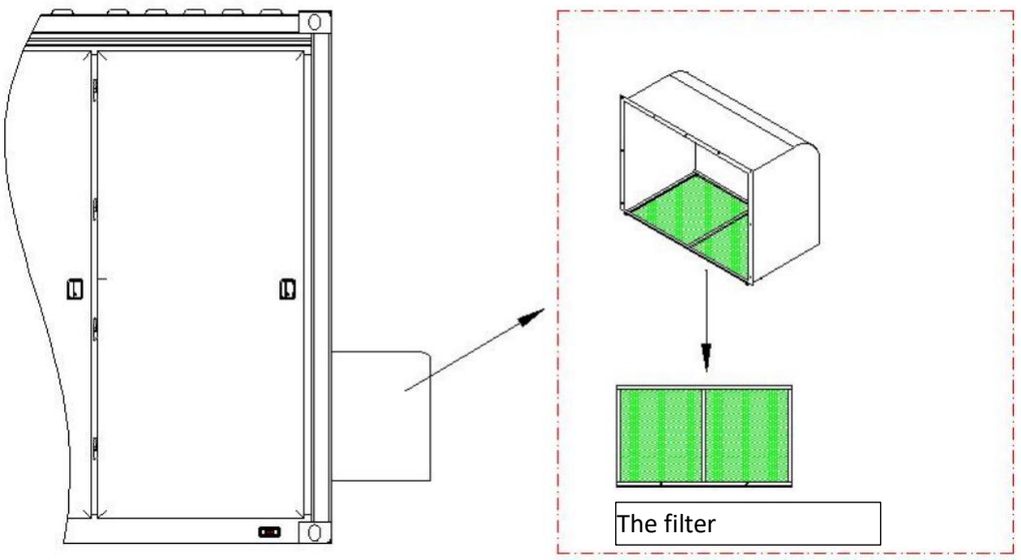

- **Motor maintenance**: The motor has been lubricated and sealed in advance before the machine leaves the factory, so it does not need lubrication in the maintenance.
- **Heat exchanger maintenance**: due to the blocking of the filter, the cleaning cycle of the heat exchanger can be longer. When the heat exchanger needs cleaning, it can
  Use a nylon brush to clean the coil's fins. Use a vacuum cleaner before scrubbing. If there is compressed air, Use high pressure air or nozzle to clean the coil.
- **Drain pipe maintenance:** Check the drain pipes frequently. If blocked, will make the condensate discharge is not smooth and cause the unit to leak.
- **Chiller maintenance:** Normally, the unit only needs to be inspected quarterly and cleaned once the external surface of the heat exchanger. However, if the machine

The device is installed in a place where there is more oil, smoke and dust, and the heat exchanger must be carried out frequently by professional air conditioning technicians
Clean to ensure adequate heat exchange and normal operation, otherwise the life of the machine will be reduced. Check the outside every week Filter screen, timely cleaning, cleaning outdoor heat exchanger every 6 months).

11.3.2 Replacing the Coolant

Replacement criterion	Replacement period	tools
The antifreeze has obvious impurities	5-6years	Water pump, screwdriver, hose
The color of antifreeze becomes significantly darker		

⚠ WARNING

- Under normal circumstances, coolant is not harmful to health, and excessive contact may cause irritation to the eyes, skin, breathing, etc.

	container user manual	Ver.	1.0
		Page.	124
		effective date	Sept.10th.2024

- Please use the special coolant recommended by CESC.

Protective equipment

When replacing the coolant, please wear personal protective equipment, which shall comply with relevant national standards, including but not limited to the following protective equipment.

Protective area	Protective equipment
Respiratory system	Use a respirator in areas with high concentrations.
hands	Use oil - and chemical-resistant gloves.
eyes	Please use protective glasses.
Skin and body	Please use non-permeable protective clothing and safety shoes.

Waste disposal

items	measures
coolant	regulations and cannot be disposed of at will.
Residual waste	Classified recycling, in line with the relevant provisions can be burned or reused.
vessel	Uncontaminated containers can be recycled, and containers that cannot be cleaned must be disposed of.

Leakage emergency treatment

When coolant leakage occurs, refer to the following measures to deal with.

- Contact professional personnel immediately and allow those not involved to evacuate to safety quickly.
- Cut off the source of leakage as much as possible to prevent it from entering sewers, drains, water bodies and other Spaces.
- Wear protective equipment to protect the body when removing the spilled liquid and avoid contact with the spilled or released material.
- A large amount of leakage: build a embankment or dig a pit to contain it, and transfer it into the container with a pump;
- A small amount of leakage: can be adsorbed with clay, sand, etc. into a sealed container to dispose of

First aid measure

items	measures
suction	Remove from contact area to fresh air and keep breathing clear. If breathing is difficult, administer oxygen; If breathing stops, immediately give artificial respiration and seek medical attention

	container user manual	Ver.	1.0
		Page.	125
		effective date	Sept.10th.2024

Skin contact	Remove contaminated clothing, wash with plenty of running water, and seek medical treatment.
Eye contact	Wash with clean water or normal saline for more than 15 minutes, and take medical treatment.
intake	Actively seek medical help and do not induce vomiting unless directed by a doctor. If you cannot get help from a doctor, send the patient, container, and label Nearest medical emergency center or hospital. Do not give any food to an unconscious patient.

Coolant drainage

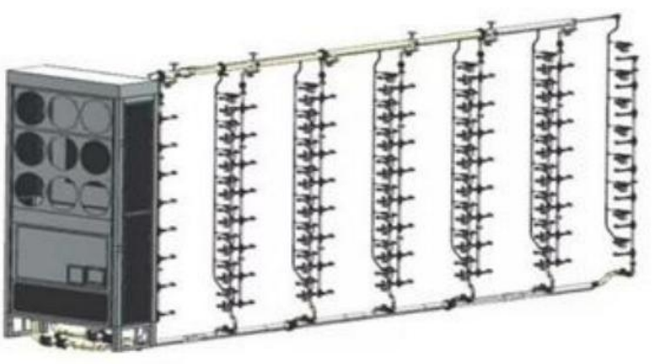

The coolant in the water tank of the liquid cooling unit is discharged through the drain port under the unit, The coolant in the battery pack The coolant in the and liquid cooling pipe is discharged through the stop valve at the end of the three-stage water inlet pipe.

Fluid infusion

1) Use a dedicated injection pump to fill liquid from the refill port at the top of the liquid cooler until the liquid level in the Level indicator tube is between high limit and the lower limit;

2) Keep the liquid cooling unit in circulation during the liquid injection process;

3) Keep the exhaust pipe open during normal use;

	container user manual	Ver.	1.0
		Page.	126
		effective date	Sept.10th.2024

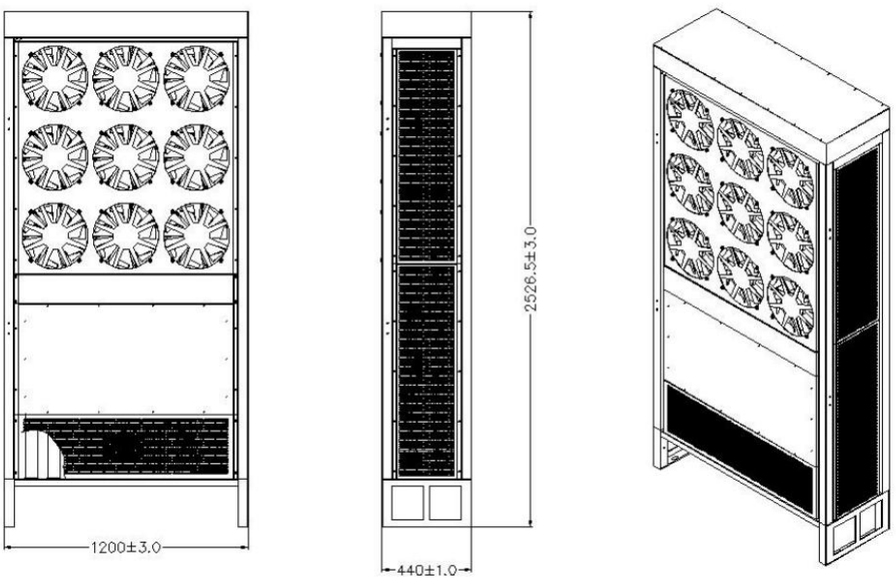

11.4 Air Conditioner Maintenance

WARNING

- Only qualified professionals are allowed to perform all maintenance tasks. Before performing maintenance, disconnect he air conditioner power supply and signal line.
  After the maintenance work is finished, connect the air conditioner power cable and signal cable.
- If cleaning or wiping the external dirt of the cabinet air conditioner, please use neutral detergent, do not use organic solvents.

items	measures
Condenser and evaporator maintenance	The fins of the filter, condenser and evaporator are cleaned regularly with a brush every year. 3-4 times/year is appropriate.
Check electrical safety status Eye contact intake	Check whether the power and communication cables of the air conditioner are normal.
	Check whether the air conditioner operates normally.
	Check whether the cooling effect of the air conditioner is normal.
	According to the actual frequency of user equipment maintenance, it is appropriate to regularly inspect 3 to 4 times a year

	container user manual	Ver.	1.0
		Page.	127
		effective date	Sept.10th.2024

11.5UPS Maintenance

The UPS is located in the integrated control cabinet.



- Before replacing the battery, shut down the UPS and disconnect it from the mains.
- Take off metal objects such as rings and watches;
- Use a screwdriver with an insulated handle. Do not place tools or other metal objects on the battery.
- Do not short-circuit or reverse circuit the positive and negative terminals of the battery.

Battery maintenance

Batteries are an important part of a UPS system. Battery life depends on the ambient temperature and the number of discharges. Use at high temperatureOr deep discharge will shorten the battery life.

1) The standard built-in battery is a sealed maintenance-free lead-acid battery. When the UPS is connected to the mains, no matter whether it is turned on or not,Always charge the battery and provide overcharge and overdischarge protection.

2)Battery use should try to keep the ambient temperature between 15 and 25 ° C.

3)If you do not use the UPS for a long time, it is recommended to charge it every 3 months.

4.)In normal use, the battery is charged and discharged every 4 to 6 months, and it is charged after discharge. Use in hot areas, the battery should be charged and discharged once every 2 months, the standard UPS should not charge less than 10 hours each time.

5) The battery should not be replaced individually. Follow the battery supplier's instructions when replacing it.

6） Under normal circumstances, the battery life is 3 to 5 years, if it is found that the condition is not good, it must be replaced early， the replacement must be carried out by a professional.

During each on-site maintenance, routine functional checks should be carried out on the UPS, including the following aspects:

items	measures
UPS operating status	If the mains is normal, the UPS should work in mains mode. If the mains is abnormal, the UPS works In battery mode. There is no fault display in both working states.
Switching of the UPS running mode	Disconnect the mains input. If the mains fails, the UPS should switch to battery mode and run normally. Then switch on the mains input. The UPS should switch back to the mains mode and work normally.
Indicator display	During the preceding two checks, check whether the indicators on the UPS are consistent with the actual operating mode. When your UPS has an abnormal situation, please contact the CESC customer Service center.

	container user manual	Ver.	1.0
		Page.	128
		effective date	Sept.10th.2024

11.6 maintenance of fire fighting equipment

qualified full-time personnel should be specially trained on fire protection systems and responsible for regular inspection and maintenance. By inspection class stipulation,perform the inspection of the gas fire extinguishing system, and make inspection records. Problems found during the inspection should be dealt with promptly.

11.6.1 Automatic fire alarm system

System check

- The annual inspection of the system can be carried out gradually on a monthly and quarterly basis according to the inspection plan;
- The monthly and quarterly inspection quantity shall conform to the provisions of the table "System Monthly Inspection, Quarterly Inspection Objects, Items and Quantity";
- The functions of the system equipment and the control functions of each subsystem shall comply with the Construction and Acceptance Standards of Automatic Fire Alarm SystemProvisions of Chapter 4 of GB50166-2019;
- For details about the process of testing the linkage control function of the system, see Fire Control Test Plan.

Fire testing solution

No.	Logic operation description	remarks
1	prepare tools: smoke temperature two-in-one test gun, 50%LEL methane gas, other tools, etc.	
2	Check that all devices are connected properly and in normal working state. Remove the solenoid valve from the cylinder container valve (to prevent accidental spraying).	
3	After the active and standby power modules are powered on, the smoke sensor, temperature sensor, and module inspection indicators are normal, and the combustible gas detector works properly.	
4	The display of the fire engine, the display of the combustible gas engine, the display of the combustible gas concentration (if any), and the indicator light have no abnormal information such as fault or fire alarm.	
5	When the smoke gun is used to trigger any smoke sensing action, the fire engine sends out an alarm, the status displays the smoke sensing fire alarm information, the fire alarm light is lit, and the sound and light alarm outside the battery cabin sends out the alarm, and the fire engine outputs the fire alarm signal to the battery management system.	

	container user manual	Ver.	1.0
		Page.	129
		effective date	Sept.10th.2024

6	Maintain the state of step 5, and pass 50%LEL methane gas to the combustible gas detector through the ventilation cap. At this time, when the detector reading is between 25%LEL and 50%LEL (within the accuracy range), the detector reports a low concentration alarm, the combustible gas alarm controller sends an alarm, outputs a low alarm signal to the outside, and starts the emergency ventilation device. When the concentration reaches 0%LEL, the high signal is output to the battery management system	
7	Keep the state of step 6, use the smoker to trigger any temperature action, the fire engine sends an alarm, the state displays the temperature alarm information, the host enters the 30s delay state, outputs the spray signal to the battery management system, and shuts down the exhaust system; 30s countdown ends, solenoid valve starts (solenoid valve lights up). The bleed light and alarm bell are activated.	
8	The host is reset, press the emergency start and stop button to start, and the sound and light alarm will start. The host enters the 30s delay state and sends a spray signal to the battery management system. 30s countdown ends, solenoid valve starts (solenoid valve lights up). [If the stop button is pressed within 30 seconds, the program after this time point will not be carried out]	
9	Remove the probe of the smoke or temperature detector to simulate fault signals. In this case, the fire extinguishing host displays fault information, the fault indicator lights up, and the fire extinguishing fault signal is output to the battery management system.	
10	When the code of the simulated combustible gas detector is wrong, the combustible gas host displays the detector fault, the fault indicator lights up, and outputs the fault signal to the battery management system.	
11	The test is complete and all fire systems should be reset. Ensure that no abnormal information is displayed on the host, and reinstall the electromagnetic valve ejector after it is reset.	

System monthly inspection, quarterly inspection object, item and quantity

No.	object	item	quantity
1	Fire detector	Fire alarm function	The fire alarm function should be checked at least once every six months for each detector
2	I/O module	startup function of The output module	Ensure that each module is checked for startup function at least once every six months

	container user manual	Ver.	1.0
		Page.	130
		effective date	Sept.10th.2024

3	Combustible gas alarm controller	Combustible gas alarm function	Check the alarm function of each combustible gas alarm controller every 3 months
4	4 Combustible gas detector	Combustible gas alarm function	The combustible gas alarm function should be checked at least once every 3 months for each detector
5	Combustible gas concentration display (if available)	Combustible gas concentration display function	The display function of each combustible gas concentration display is checked monthly
6	Fire alarm	Fire alarm function	The fire alarm function should be checked at least once every six months for each fire alarm
7	Emergency start and stop button	On-site emergency start and stop function	It should be ensured that the start and stop function of each on-site start and stop button should be checked at least once every six months
8	Automatic fire protection system	Overall linkage control function	The linkage control function should be checked at least once every six months for each alarm area

System maintenance

Fire detectors should be cleaned or calibrated every 2 years; The combustible gas detector needs to be calibrated at zero point every 12 months, and the gas sensor should be replaced in time after reaching the life span specified by the manufacturer (3 years).

- **terminal**

Check the terminal of all products in the system, such as detector and base, controller, manual component button, fire hydrant button, fire electrical control device, other components, etc., and re-fasten the loose terminal connection; Replace corroded screws,terminal gasket and other wiring components; remove corroded wire ends, iron and reconnect.

- **Point-type smoke fire detector**

After cleaning sensing parts and circuit boards with professional process equipment, the detector response threshold should be calibrated, and the response threshold should be within the range of the response threshold specified in the factory inspection procedures for finished products of the manufacturer.

- **point type heat and fire detector**

Use professional process equipment to clean the temperature sensing parts and circuit boards, and the response time of the detector should be calibrated after cleaning, and the response time should be within the response threshold specified in the factory inspection procedures of the production enterprise.

- **Combustible gas detector**

	container user manual	Ver.	1.0
		Page.	131
		effective date	Sept.10th.2024

Use the alarm function of the standard gas detection combustible gas detector. If it does not meet the requirements, the alarm threshold should be adjusted or the gas sensor should be replaced according to the requirements of the product manual, and then the sensor alarm threshold should be calibrated to the detector factory setting value.

- **Controller products and fire electrical control devices**

Use compressed air, brush, etc. to clean the circuit board, terminal dust; Use a vacuum cleaner or a damp cloth to clean the dust inside the cabinet. In places with humid air, desiccant can be placed in the cabinet. Use a multimeter to measure the power supply voltage of the detector or module at the end of the controller bus circuit. If the voltage is smaller than the value specified in the manual, replace the circuit board or adjust the circuit.

11.6.2 Aerosol fire extinguishing system

System check

Monthly inspection shall meet the following requirements:

- fire extinguishing agent storage containers and container valves, connecting pipes, valve driving devices, nozzles, signal feedback devices and other system components should be free from collision deformation and other mechanical damage, surface should be free from rust, protective coating should be intact, nameplate and sign plate should be clear, manual operation device protective cover, lead seals and safety marks should be complete.
- The pressure in the fire extinguishing agent and drive gas storage vessel shall not be less than 90% of the designed storage pressure.

A comprehensive inspection of the gas fire extinguishing system should be carried out once a quarter, and the following provisions should be met:

- The type and distribution of fuels and the openings in the protection area shall comply with the design regulations.
- The fixing of the equipment, fire extinguishing agent conveying pipelines, supports and hangers between storage devices shall not be loosened.
- The connecting pipe should be free from deformation, crack, and aging. If necessary, send to the statutory quality inspection agency for testing or replacement.
- The orifice of each nozzle should be unblocked.
- If there is damage or blockage in the fire extinguishing agent conveying pipeline, the tightness test and purge shall be carried out according to the provisions of section E.1 of the Code for Construction and Acceptance of Gas Fire Extinguishing System GB50263-2007.

Every year should be in accordance with the "gas fire extinguishing system construction and acceptance Code GB50263-2007" section E.2 provisions, every prevention
A simulated start-up test was conducted in the protection area

	container user manual	Ver.	1.0
		Page.	132
		effective date	Sept.10th.2024

System maintenance

The maintenance and management of cylinders shall be carried out in accordance with the "Gas cylinder Safety Supervision Regulations" and sent to a professional inspection institution for inspection every 3 years.

Cylinder life of 20 years. In the process of use, if the gas cylinder is found to have one of the following conditions, regular inspection should be carried out in advance:

- where there is serious corrosion, damage or doubt about its safety and reliability.
- In stock or used after the non-use time exceeds one inspection cycle.

12. Routine Maintenance

The following is the recommended maintenance cycle, and the actual maintenance cycle should be adjusted according to the specific installation environment of the product.

Factors such as the size of the power plant, the installation location, and the site environment will affect the maintenance cycle of the product. For example, in the case that the operating environment is windy and sandy, which will result in thick dust, then it is necessary to shorten the maintenance interval and increase the frequency of maintenance.



Safety requirements in maintenance and repair:

● Before connecting or removing cables, turn off the protection switch of the corresponding loop.
● Place a warning sign indicating that the switch must not be turned on at the position where the switch resides.
● Use an electroscope of a proper voltage level to check whether the equipment is energized and ensure that the equipment is completely powered off.
● If charged bodies are found nearby, block or wrap them with insulation plates or insulation tapes.
● Before performing maintenance or repair, securely connect the loop to be repaired to the main ground loop using a ground cable.
● After the maintenance or repair is complete, remove the ground cable between the loop that has been maintained and the main ground loop.

12.1 Preparation Before Maintenance

	container user manual	Ver.	1.0
		Page.	133
		effective date	Sept.10th.2024

NOTE

This section lists only personal protective equipment (PPE). For details about the tools required for replacement, see the specific parts replacement section.

 Insulated gloves	 Protective gloves	 Goggles	 Dust mask
 Insulated shoes	 Reflective vest	 Safety helmet	 Safety harness
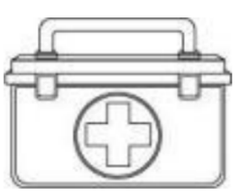 Medical kit	-	-	-

12.2 Routine Maintenance

12.2.1

Routine Maintenance

Check the Event History to see whether there are major or minor alarms.

	container user manual	Ver.	1.0
		Page.	134
		effective date	Sept.10th.2024





NOTE

For details, see the O&M Manual.

12.2.2 Quarterly Maintenance

	container user manual	Ver.	1.0
		Page.	135
		effective date	Sept.10th.2024

Table- Quarterly maintenance checklist

Maintenance Category	Maintenance Action	Expected Result	System Powered Off or Not
Container	Perform the visual inspection: • Appearance • Rust condition • Door lock • Vent • Temperature • Noise	• The coating is not peeling or scratched. • There is no obvious paint peeling or rust. • The door locks are not damaged. • There is no dust at the vents. • There are no insects, rodents, snakes or other animals. • There is no damaged or deformed equipment inside the container • There is abnormal noise during the operation of the equipment. • There is no overtemperature area within the battery racks. • There is no oxidation or rust inside the battery racks.	No

	container user manual	Ver.	1.0
		Page.	136
		effective date	Sept.10th.2024

Air conditioner [1]	• Check the appearance. • Clean the filter[2].	• There is no obvious damage to the appearance. • There is no obvious paint peeling or rust. • The screws are secured. • The fans rotate properly without abnormal sound. • The filter is clean and free from blockage.	No
Integrated Control Panel	Check the UPS Battery Status	Check if the UPS battery status is normal (100% SOC)	No
Power distribution area	Check whether there are foreign objects in the power distribution area.	The area is clean and free from foreign objects.	No
Pressure relief window[3]	Perform the visual inspection: • Appearance • Rust condition • Foreign objects/Ice and snow	• There is no obvious paint peeling or rust. • Pressure relief windows are not damaged. • There is no foreign object, ice, or snow on the top.	No
Warning Signs	Perform the visual inspection • Appearance	• There is no obvious paint peeling or rust, or defacement (otherwise, change if necessary).	No

Note

[1]: Monthly maintenance is recommended in a high-temperature (≥ 35°C) or low- temperature (≤ 0°C) environment.

[2]: You are advised to clean the filter after each occurrence of a sandstorm and before summer in sandstorm-stricken areas. In other areas, clean the filter according to the actual situation and ensure that the filter or condenser is not blocked. The recommended tool is high pressure water gun.

[3]: In areas with severe sandstorms or heavy ice or snow, perform maintenance based on the actual situation. Ensure that there is no foreign object, ice, or snow on the pressure relief windows. Clean the foreign objects, ice, or snow in the specified area to avoid damaging the pressure relief devices due to improper operations.

12.2.3 Semi-annual Maintenance

Consistent energy storage concept

	container user manual	Ver.	1.0
		Page.	137
		effective date	Sept.10th.2024

Table- Semi-annual maintenance checklist

Maintenance Category	Maintenance Action	Expected Result	System Powered Off or Not
Air conditioner	Perform the visual inspection: • Appearance • Rust condition • Screw • Fan • Filter	• There is no obvious damage to the appearance. • There is no obvious paint peeling or rust. • The screws are secured. • The fans rotate properly without abnormal sound. • The filter is clean and free from blockage.	No
Air conditioner external fan	Clean the air filter of the external fan[1].	The filter is clean and free from blockage.	No
Ambient temperature and humidity check	Perform the visual inspection on the record	The ambient temperature and humidity records are within the operating range.	No
Smoke detector and temperature and humidity (T/H) sensor	Spot check the smoke detector and T/H sensor with smoke or heat generated by using dedicated devices[2].	The smoke detector indicator is steady red, and the T/H sensor reports the temperature change on the LCD Display.	Yes

	container user manual	Ver.	1.0
		Page.	138
		effective date	Sept.10th.2024

Fire suppression module	Perform the visual inspection and do the cleaning in necessary	• Check whether the pressure gauge pointer of the module is in the green area. • Clean the module. • Check that cables are not damaged, loose, or disconnected. The display is normal. • The module is clean and free from dust. • Cables are intact and securely connected.	Yes
Function Check	Perform the visual inspection on the event record, and do the measurement using multimeter	• Check the operation status of the total positive and total negative relays in the high-voltage box: and check whether the operation is normal by sending an open/close command. • Measure whether the 24V output voltage is within the specification range. • Check the operation record of the battery racks, to make sure the current, voltage, and temperature are within the range of use. • Check the Integrated Control Panel UPS status is normal.[3]	Yes

Note

[1]: You are advised to clean the filter after each occurrence of a sandstorm and before summer in sandstorm-stricken areas. In other areas, clean the filter according to the actual situation and ensure that the filter or condenser is not blocked. The recommended tool is high pressure water gun.

[2]: Remove cables from the solenoid valve in advance of the test to prevent extinguishant release.

[3]: If the UPS is not in-use for some time, please charge the UPS at least every 6 months. The SOC of the battery in the UPS will reach to 90% in 3 hours. It is recommended to charge the UPS for 48 hours after long-term storage.

	container user manual	Ver.	1.0
		Page.	139
		effective date	Sept.10th.2024

12.2.4 Annual Maintenance

Table - Annual maintenance checklist

Maintenance Category	Maintenance Action	Expected Result	System Powered Off or Not
Battery pack and High Voltage Box	Perform the visual inspection: • Appearance • Rust condition • Screw • Fan • Front panel vent	• There is no obvious damage to the appearance. • There is no obvious paint peeling or rust. • The screws are secured. • The fans rotate properly without abnormal sound. • The front panel vent is clean and free from blockage. • There is no flammable object on top of the battery racks. • The installation fixation points between the battery rack and foundation steel plate in the container are firm, and there is no corrosion. • There is no coolant leakage.	Yes
Cabling and Wiring Connections	Perform Visual Inspection	• Check to make sure the cable layout and wiring is correct, the connector cable is not damaged, the connector is placed correctly and there is no overlap / short circuit, etc. If there is any abnormality, it should be corrected immediately. • Check that all the inlet and	Yes

	container user manual	Ver.	1.0
		Page.	140
		effective date	Sept.10th.2024

		outlet holes of the battery racks are well sealed. • Check whether there is water seepage inside the battery racks. • Check whether the connection of DC cable and copper bar is loose, • Check whether there is any damage to the power cable and communication cable, especially whether there are traces of cut on the skin in contact with the metal surface.	
Grounding	Perform visual inspection and do the measurement using multimeter	• Check whether the grounding connection is correct, and the grounding resistance value should not be greater than 4Ω.	Yes

■ **Maintenance precautions**

In order to safely and effectively care and maintain the system, maintenance personnel are requested to carefully read and comply with the following safety requirements:

• Must hold an registered electrician certificate, and can only work after passing professional training.

• Must follow the relevant safety precautions, use the necessary tools, and wear personal protective equipment.

• It is strictly forbidden to wear metal jewelry such as jewelry or watches.

• Under any circumstances, it is strictly forbidden to touch the high-voltage positive and negative poles of the energy storage system with both hands at the same time.

• Disconnect all high-voltage and low-voltage switches before performing maintenance on the battery energy storage system.

• When carrying out cleaning operations, it is strictly forbidden to clean directly with water, and use a vacuum cleaner to clean up if necessary.

• When plugging and unplugging cables, the operation should be standardized, and brute force or violent operation should not be allowed.

• After the maintenance is over, please clean the tools and materials in time to check if there are any metal objects left inside or on the top of the equipment.

	container user manual	Ver.	1.0
		Page.	141
		effective date	Sept.10th.2024

• If you have any questions about the operation and maintenance of the equipment, please contact the customer service center of CESC New Energy Technology Co., Ltd., and it is strictly forbidden to operate it without authorization.

■ **Equipment maintenance**

1) Regular dust removal: Clean the system regularly, especially pay attention to cleaning the air inlet and outlet of the fan, and use a vacuum cleaner to clean it if necessary to ensure that the air can circulate freely in the Container. The power supply must be cut off before dust removal, and it is strictly forbidden to rinse with water.
2) Regularly check whether the cable connection terminals are loose, whether there is serious rust or oxidation on the surface of the terminals, and whether the contact is good.
3) Regularly check whether the cable is aging or damaged, and whether the insulation is good.
4) Regularly check whether the indicator light is in good condition and whether the function is normal.
5) Charge the system every 3 months so that the SOC reaches no less than 80%.
6) SOC calibration: The battery management system estimates the SOC value through a mathematical model based on parameters such as current and time. The actual capacity of the battery is susceptible to the influence of factors such as charge-discharge rate, temperature, and self-discharge, resulting in cumulative errors in the SOC. In order to eliminate the effects of accumulated errors, the battery management system has a full charge calibration (100%) and full discharge calibration (0%) functions.
7) Regular inspection of the system (every 2 years): Regularly go to the site to conduct a comprehensive inspection of the battery system to determine whether the system function is normal and whether the battery status is normal.
8) System upgrade: If you find that the battery power supply time is greatly shortened or the system fails frequently, please contact CESC in time, and ask professionals from CESC to diagnose and maintain the system.
9) Regularly check whether the status of the battery energy storage system and the alarm indicator are in good condition and whether the function is normal.
10) Regularly check whether the emergency stop switch of the battery energy storage system is effective to ensure that the system can be stopped quickly in an emergency.
11) Regularly check the fire protection system, whether it is in good condition and whether it is within the validity period.
12) It is forbidden to use different types of battery modules in series or parallel.

	container user manual	Ver.	1.0
		Page.	142
		effective date	Sept.10th.2024

13. Troubleshooting

If with the help of this manual, the problem or faults cannot be resolved, please contact CESC.

At the same time, the following information needs to be provided in order to provide faster and better service.

- Device serial number, date of manufacture, and software version information
- Information such as the manufacturer, model, and configuration of the external device connected to this device
- Fault information and a brief description
- Photographs of the scene of the failure (if site conditions permit)

	container user manual	Ver.	1.0
		Page.	143
		effective date	Sept.10th.2024

Appendix

Appendix I - Emergency Handling

If an accident (including but not limited to the following) occurs on the site, ensure the safety of onsite personnel first and contact the Company's service engineers.

Battery Falling or Strong Impact

● If a battery has obvious damage or abnormal odor, smoke, or fire occurs, evacuate the personnel immediately, call emergency services, and contact the professionals. The professionals shall use fire extinguishing facilities to extinguish the fire under safety protection.

● If the appearance is not deformed or damaged, and there is no obvious abnormal odor, smoke, or fire, ensure safety and perform the following operations:

– Warehouse: Evacuate personnel, transfer the battery to an open and safe place by professionals using mechanical tools, and contact the Company's service engineers. Leave the battery for an hour and ensure that the battery temperature is within the room temperature range (±10°C) before handling.

– ESS onsite: Evacuate personnel, close the doors of the ESS, transfer the battery to an open and safe place by professionals using mechanical tools, and contact the Company's service engineers. Leave the battery for an hour before handling.

Flood

● Power off the system if it is safe to do so.

● If any part of the batteries is submerged in water, do not touch the batteries to avoid electric shock.

● Do not use batteries that have been soaked in water. Contact a battery recycling company for disposal.

Fire

● If a fire occurs, power off the system if it is safe to do so.

● Extinguish the fire with carbon dioxide, FM-200 or ABC dry powder fire extinguishers.

● Ask firefighters to avoid contact with high-voltage components during fire fighting to prevent the risk of electric shock.

● Overheating may cause battery deformation, faults, and leakage of corrosive electrolytes or toxic gases. Use respiratory protective equipment and keep a safe distance from the batteries to prevent skin irritation and chemical burns.

Fire Alarm Horn/Strobe

When the alarm indicator on the equipment blinks or buzzes:

● Do not approach.

	container user manual	Ver.	1.0
		Page.	144
		effective date	Sept.10th.2024

● Do not open the door.
● Stay away immediately.
● Cut off the power supply remotely only when your safety is guaranteed.

Gas Exhaust
● Onsite personal protection: Do not directly face the exhaust vents.
● Post-disaster product maintenance: Contact the Company's service engineers for evaluation.

Extinguishant Release or Fire

● Suggestions for onsite O&M personnel:
a. When a fire occurs, evacuate from the building or equipment area, press the fire alarm bell, and immediately call the fire emergency service. Notify the professional firefighters and provide them with relevant product information, including but not limited to battery pack types, ESS capacity, and battery pack location and distribution.
b. Do not enter the affected building or equipment area under any circumstances, and do not open the doors of the ESS. Isolate and monitor the site. Keep irrelevant personnel away from the site.
c. After calling the fire emergency service, remotely power off the system (such as the PCS,EMS, auxiliary power supply devices, and Integrated Control Panel) while ensuring your own safety.
d. After professional firefighters arrive, provide relevant product information, including but not limited to battery pack types, ESS capacity, battery pack location and distribution, and user manuals.
e. After the fire is extinguished, the site must be handled by professionals in accordance with local laws and regulations. Do not open the doors of the ESS without permission
f. Post-disaster product maintenance: Contact the Company's service engineers for evaluation.
● Suggestions for professional firefighters:
a. For product information, see the information provided by O&M personnel, including but not limited to battery pack types, ESS capacity, battery pack location and distribution, and user manuals.
b. Do not open the doors of the ESS before it is deemed safe by professionals.
c. Follow local firefighting regulations.
Please refer to CESC Emergency Response Plan for further detailed information.

	container user manual	Ver.	1.0
		Page.	145
		effective date	Sept.10th.2024

Appendix II - Crimping an OT or DT Terminal

Requirements on an OT or DT Terminal

- If a copper cable is used, use copper wiring terminals.
- If a copper-clad aluminum cable is used, use copper wiring terminals.
- If an aluminum alloy cable is used, use copper-to-aluminum wiring terminals, or aluminum wiring terminals along with copper-to-aluminum washers.

■ Figure 1 Requirements on an OT or DT Terminal

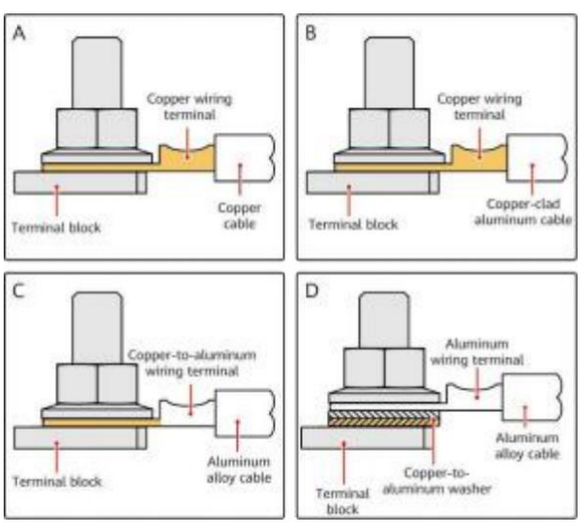

NOTICE

- Do not connect aluminum wiring terminals to the terminal block. Otherwise electrochemical corrosion may occur, affecting the reliability of cable connections.
- Comply with the IEC 61238-1 requirements when using copper-to-aluminum wiring terminals, or aluminum wiring terminals along with copper-to - aluminum washers.
- Do not mix up the aluminum and copper sides of a copper-to-aluminum washer. Ensure that the aluminum side of the washer contacts the aluminum wiring terminal, and that the copper side contacts the terminal block.

Crimping an OT or DT Terminal

NOTICE

	container user manual	Ver.	1.0
		Page.	146
		effective date	Sept.10th.2024

● Avoid scratching the core wire when stripping a cable.
● The cavity formed after the conductor crimp strip of the OT or DT terminal has been crimped must wrap around the core wire completely. The core wire must make close contact with the OT or DT terminal.
● Wrap the wire crimping area with heat shrink tubing or insulation tape. The heat shrink tubing is used as an example.
● Use a heat gun carefully to avoid heat damage

■ Figure 2 Crimping an OT terminal

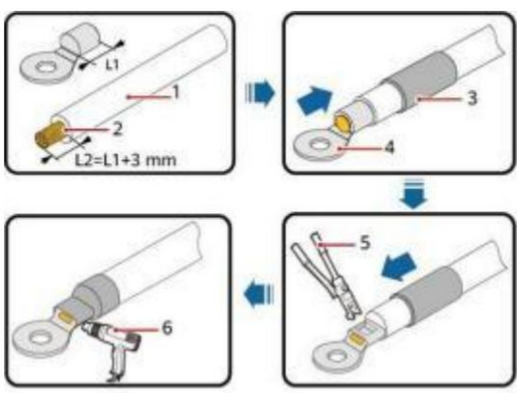

(1) Cable (2) Core wire (3) Heat shrink tubing
(4) OT terminal (5) Hydraulic pliers (6) Heat gun

■ Figure 3 Crimping an DT terminal

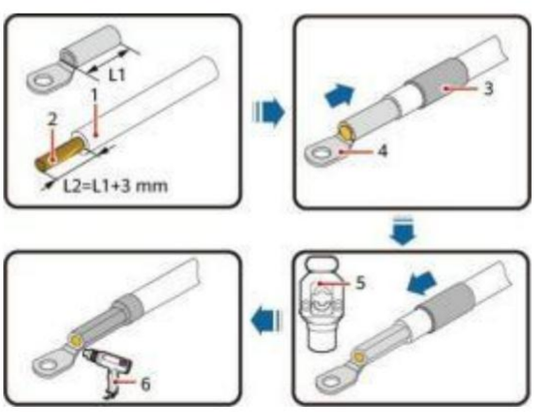

(1) Cable (2) Core wire (3) Heat shrink tubing
(4) DT terminal (5) Hydraulic pliers (6) Heat gun

	container user manual	Ver.	1.0
		Page.	147
		effective date	Sept.10th.2024

Appendix III – Acronyms and Abbreviations

AC	Alternating Current
AWG	American Wire Gauge
BAMU	Battery Array Management Unit (3rd-level BMS)
BCMU	Battery Cluster Management Unit (2nd - level BMS)
BESS	Battery Energy Storage System
BMS	Battery Management System
BMU	Battery Management Unit (1st -level BMS)
CCU	Central Control Unit
DC	Direct Current
DI/DO	Data Input / Data Output
DOD	Depth of Discharge
DN38	Diametre Nominal 38
DEC	Diethyl Carbonate
EMC	Ethyl Methyl Carbonate
EOL	End of Life
ESD	Electrostatic Discharge
ESS	Energy Storage System
EMS	Energy Management System
FS%	Full Scale %
ft	Feet in measurement
gpm	Gallons per Minute
GND	Ground (or Grounding)
HVAC	Heating, Ventilation and Air Conditioning
ICP	Integrated Control Panel
IP Class	Ingress Protection Class
LFL	lower flammability limit
LFP	Lithium Iron Phosphate
MCB	Miniature Circuit Breaker
O&M	Operation and Maintenance
PCS	Power Conversion System
P-rate (0.5P)	The ratio of the charge/discharge power to the battery energy as measured by the system.
PPE	Personal Protective Equipment
RH (%)	Relative Humidity (%)
SOC	State of Charge
SOH	State of Health
UPS	Uninterruptible Power Supply
DT Terminal	Deutsch Terminal
OT Terminal	Open Terminal

	container user manual	Ver.	1.0
		Page.	148
		effective date	Sept.10th.2024

Appendix IV - References

1. CESC Internal Standards： QB/GX, Regulations on hoisting and transportation of prefabricated cabin energy storage power stations (updated version）.

3. CESC Internal Document： Liquid-cooled energy storage system station-level layout guidance.

4. GB/T 36276, Lithium-ion Battery for Electrical Energy Storage

5. NFPA – 70, National Electric Code

6. NFPA – 885, Standard for the Installation of Stationary Energy Storage Systems

7. NFPA – 70E, Standard for Electrical Safety Requirements for Employee Workplace

8. NFPA – 72 National Fire Alarm and Signaling Code

9. NFPA – 2001 Standard on Clean Agent Fire Extinguishing Systems

The above are listed for quick references only, further reference lists can be discussed with CESC.

	container user manual	Ver.	1.0
		Page.	149
		effective date	Sept.10th.2024

Disclaimer

The specifications and descriptions contained in this document are verified to be as accurate as possible at the time of publication.

The images provided in this document are for demonstration purposes only. Details may vary by product version and geography.

This document does not create contractual obligations for CESC New Energy Technology Co., Ltd. or its affiliates, except to the extent expressly agreed in a contract.

To communicate any inaccuracies or omissions in this document, please contact CESC New Energy Technology Co., Ltd..

COPYRIGHT INFORMATION

Notice of Proprietary Rights

This document and its contents are **confidential** and are protected by trade secret, patent, copyright, and other applicable laws. It is to be used only by authorized personnel and owners of CESC BESS Products, such as Unauthorized use is illegal.

Other than CESC personnel, this document may not be reproduced or transmitted in whole or in part, in any form or by any means, electronic or mechanical, including photocopying, microfilming, and recording, or by any information storage and retrieval system, without prior written consent of CESC.

Consistent energy storage concept